BOSTON PUBLIC LIBRARY
3 9999 06656 624 9

T223
.C246
1943
v.3, pt.1

No.

Published May 11, 1943

Serial No. 17,398

ALIEN PROPERTY CUSTODIAN

LEAD ELECTRIC ACCUMULATORS

Lucien Jules Jumau, Paris, France; vested in the Alien Property Custodian

Application filed April 20, 1935

The present invention relates to improvements in the construction of electric accumulators. Accumulator plates are known under the name "Ironclad" or "Panzerplatte" which are provided with fine slots and in which the active material is lodged. In the axis of each tube is disposed a conductor of antimonial lead, the conductors of all the tubes of a plate being connected together at the upper and lower ends by two horizontal bars also of antimonial lead.

The present invention has for an object to reduce to a considerable extent the weight of accumulators of the above type while extending their life. A first improvement applied to the construction of the plates of such accumulators consists in replacing the ebonite tubes of the positive plates by tubes of any section, circular, elliptical, polygonal, etc., of porous material such as rubber of porous structure and preferably micro-porous rubber.

By virtue of this substitution any falling off of active material is completely avoided, which falling off was merely retarded in plates formed of split ebonite tubes. The life of the plates is thus considerably increased since it is only limited by the much greater life of the tubes of microporous material. A secondary advantage of this construction is the reduction of the distance between the base of the plates and the bottom of the container and consequently reduction in the space occupied since there is no need to provide for the lodging of deposits on the bottom of the container.

The new construction provides as another particularly advantageous consequence the following feature relative to the positive plate; since the active material does not fall, the central conductor is always surrounded by active material and is never in direct contact with the electrolyte. It serves practically only as a conductor and the electrolytic action takes place only over a very slight thickness. Hence, the possibility of replacing this conductor hitherto made of antimonial lead by a conductor in lead covered light metal, said light metal being aluminium or aluminium alloy.

The present invention has for its object an electric accumulator of the armoured type characterised by the simultaneous use of tubes containing the active positive material in porous material such as microporous rubber and conductors located in the axis of the said porous tubes of lead covered aluminium or a lead covered aluminium alloy. The construction of the positive conductor unit of the element in accordance with the invention is very simple. This unit comprises, in addition to the central conductors, a horizontal bar connecting their upper ends, the whole being of lead-covered aluminium or of a lead-covered aluminium alloy with a thicker layer of lead on the horizontal upper bar. The central conductors may be provided with small lugs to hold them exactly in the axis of the tubes of micro-porous rubber.

There results a considerable diminution in the weight and an increase in the conductivity which produces a specific increase of power and energy. Moreover, the introduction of antimony into the electrolyte is avoided, this antimony in plates having conductors of antimonial lead electrolyzing from the positive on to the negative, creating on the latter energetic local actions which diminish the output and impede proper conservation of the charge.

It should be noted moreover, that the conductor in lead-covered aluminium which is converted into peroxide only over very slight thickness is indeformable. This advantage, joined to the increased conductivity, permits of dispensing actually with the metal bar of antimonial lead connecting the lower part of the conductors of the tubes. It is sufficient either to make use of tubes closed at the lower end or to close the lower end of each tube with a small unattackable plug, or by an ebonite bar carrying plugs opposite each tube. The ebonite bar can also be provided with perforations into which extend the ends of the tubes, adhesion being obtained, for example, through the medium of rubber solution.

This modification provides considerable reduction in the weight of the plates. The positive "ironclad" plates thus modified may be mounted in known manner opposite negative plates comprising a conducting grid in lead covered aluminium provided as usual with active material.

In order to reduce still further the weight of the elements and of the batteries, the junctions connecting the heads of the plates as also the connections connecting the elements together are formed of lead covered aluminium, or of a lead covered aluminium alloy, the joint being effected by applying lead either between the heads of the plates and the junctions or between the stocks of the latter and the heads of the connections.

The accompanying drawings make clearer the above description.

Fig. 1 is a view in section of a positive electrode mounted between two negative electrodes.

Fig. 2 is a view of a positive plate with a junction bar connecting the heads of the plates.

Fig. 3 is a view of a group of negative plates with a coupling bar forming the connection between elements.

Fig. 4 is a detail of a bar with plugs for closing the tubes of a positive plate.

Fig. 5 is a detail of a bar provided with perforations adapted to receive the lower ends of the tubes of a positive plate.

In Fig. 1, **1** denotes the positive plate, **2** the negative plate and **3** a separator; the positive plate **1** is composed of a series of tubes **6** of microporous ebonite for example containing the active material **5** and in the axes of which are located conductors of lead covered aluminium **4**. Each conductor **4** is held in the axis of the corresponding tubes by lugs **7**; each of the tubes has two reinforcing ribs **8**.

Fig. 2 is a view of the positive plate in accordance with the invention. This plate is constituted by a certain number of porous juxtaposed tubes which may be caused to adhere to one another by any known means (vulcanization, gluing, etc.). These tubes are closed at their lower ends; the central conductors of lead covered aluminium or of lead covered aluminium alloy are connected together by a horizontal bar **9** of the same metal, and the junctions of the heads of the plates of same polarity are constituted by bars **14** of the same lead covered metal or alloy. In similar manner the connections between elements are constituted by members **15** (Fig. 3) of lead covered aluminium or aluminium alloy, and finally the grids **16** of the negative plates (Fig. 3) are also of the same lead covered metal or alloy.

In lieu of being closed at their lower ends the tube **6** might be open but sealed by insulating and unattackable plugs **10** carried by an ebonite bar **11** or they may be open and closed by an ebonite plate **12** provided with recesses **13** in which the ends of the tubes can fit and be sealed.

LUCIEN JULES JUMAU.

PUBLISHED
MAY 11, 1943.
BY A. P. C.

L. J. JUMAU
LEAD ELECTRIC ACCUMULATORS
Filed April 20, 1935

Serial No.
17,398

Fig. 1

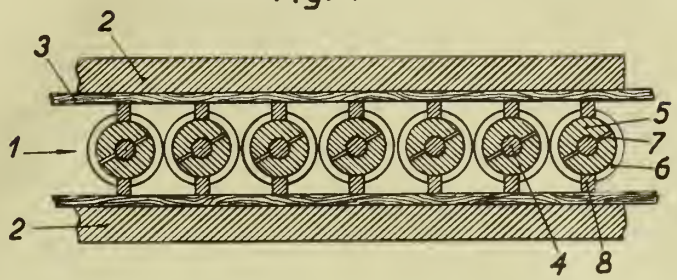

Fig. 2

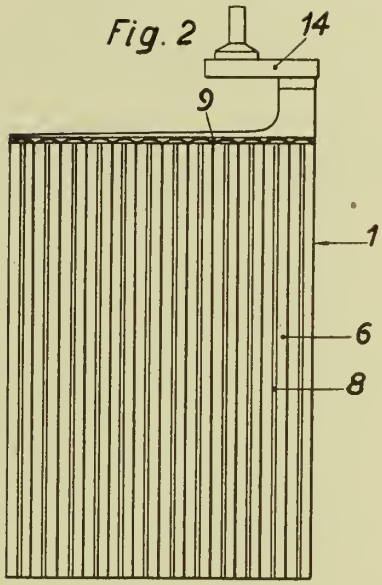

Fig. 3

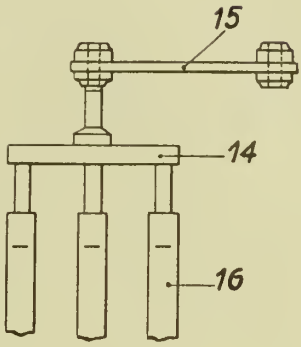

Fig. 4

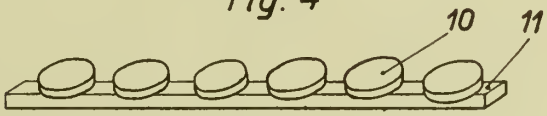

Fig. 5

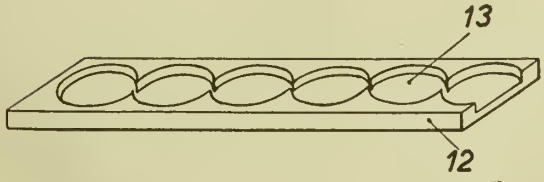

Inventor
Lucien J. Jumau
Raymond C. Robin
By
Attorney

Digitized by the Internet Archive
in 2014

https://archive.org/details/uspatentapplicat31unit

Published May 11, 1943

Serial No. 123,856

ALIEN PROPERTY CUSTODIAN

ADHESIVE LAYERS AND THEIR PRODUCTION

Heinrich Prüfer, Vienna, Austria; vested in the Alien Property Custodian

No Drawing. Application filed February 3, 1937

This invention relates to adhesive layers and the production thereof. It is already known to use artificial or synthetic resin for the glueing together of wood, and more particularly of multiply boards of all kinds. For this purpose paper foil impregnated with synthetic resin is used for intermediate layers inserted between the plies to be stuck together. The manufacturing of such adhesive films is effected in a known manner by steeping paper with a condensation product of phenols and formaldehyde dissolved in a solvent such as alcohol, acetone, or the like, or there is employed for the soaking of the paper an initial condensation product, that is to say a product that has only been condensed to such a point that the formation of two layers is avoided, such product being not diluable to any extent with water. The films thus produced are inserted between the sheets or plies to be united, and the whole pressed together in a hot glueing process.

In order to avoid obtaining spoilt work it is necessary that the air in the rooms in which films of this nature are being used for glueing purposes shall contain a certain amount of moisture.

Such solutions (alcoholic or acetonic) are not however suitable for direction application to the surface to be stuck, for example to a veneer, with the aid of a glue spreading machine. Apart from the fact that, when working with the glue spreading machine, which is commonly used for the application of bone-, casein-, and albumen glue, considerable quantities of expensive solvents go to waste (with the incidental risk of fire and explosion), the solution becomes thickened by this treatment, with the result that the applied layer becomes uneven and material wasted. This procedure cannot be adopted with a solution of an incipient condensation product either, which is not diluable with water, since, apart from the fact that heating must be continued for a long time before the insoluble and infusible condition is reached, the solution is too thick (resulting in uneven application) and it is also impossible to avoid the concurrent use of water in the machine, for washing purposes, as a solvent, and otherwise.

The present invention relates to novel adhesive layers consisting of material that has not as yet been employed for this purpose. In accordance with the invention there are employed for this purpose resin soaps, and more particularly soaps of hardenable synthetic resins. As synthetic resin for this purpose there are employed more particularly condensation products of aldehydes with phenols or their homologues or derivatives, the condensation being necessarily carried to such a point that two layers become formed. Such condensation products readily admit of saponification with alkalies, the resulting product being resin soaps or resin solutions which are unlimitedly diluable with water without becoming turbid or precipitating out. Phenol and aldehyde may be used in equal proportions. If more rapid hardening is desirable the condensation may be carried out with an excess of aldehyde.

Natural resin soaps may also be added to the synthetic resin soap for the purpose of bulking the latter, for the sake of economy.

I have found it to be advantageous to add softeners, such as oils, fats, or glycerine, the former in an emulsified or saponified form, to the resin soap solution.

Soaps of this description, provided they be properly diluted, may be directly applied to the surfaces to be stuck together, just like bone-, casein-, or albumen glue, with the aid of the usual glue spreading machines, or alternatively, foils of various and preferably absorbent material, such as paper or textiles, thin peeled veneers, or even metal foil or the like, may be treated with the said soaps, for example by spreading, steeping, or otherwise, and the thus prepared thin sheets employed as adhesive layers.

When highly absorbent material, such as for example thin veneers of poplar or beech-wood, is employed for the intermediate layers, or when the surfaces to be stuck together are highly absorbent, as in the case of poplar or beech-wood veneers, I have found, that the resin soap solutions, more particularly when directly applied, are for the greater part absorbed by the material and impregnate the same through and through, with the result that the adhesive power, which naturally depends solely upon the adhesive present on the surface, is impaired.

According to a further form of the invention, these drawbacks are obviated by causing the adhesive to collect on the surface of the surfaces to be stuck together, or by preventing the same from penetrating into the underlying material. This result is achieved by precipitating on the surface of the plies to be stuck together precipitation products from the synthetic resin soaps which are diluable to any extent with water and which may if desired be commixed with natural resin soaps. This precipitating out is effected either by first treating the surfaces to be stuck together, with a precipitant, such as for example metal salt solutions (e. g. alum), dilute acids, or solutions of resins not miscible or diluable to any extent with water, the latter being obtainable for example by the condensation of phenols and aldehydes with an excess of alkali. If the solutions of synthetic resins diluable to any extent with water be then at once applied the precipitation products precipitate out on the surface. Or, conversely, the resin soaps unlimitedly dilu-

able with water may be applied first and afterwards the precipitants. The adhesive is thereby effectually prevented from penetrating far into the material. When salts are used the precipitation products may be metallo-resin soaps, when acids are used resins, and when resins are used as precipitants mixtures of resins and resin soaps, since all resins and resin compounds present are caused to precipitate out by nucleus formation or by inoculation action.

Both in the case of the first-mentioned procedure of applying the resin soap alone, as also in the modified procedure using precipitants, I have found it to be advantageous to add to the resin soap unlimitedly diluable with water, or in the case of the modified procedure with precipitation, to these resin soaps and to the precipitant solution, or to one of the two, aqueous solutions of such carbohydrates as possess free hydroxyl groups, such as more particularly cane sugar or the like. By such addition to the resin solutions a thickening is obtained, even when the resin content is relatively slight, so that the mixture is better suited for spreading. When large quantities are added the addition must not be given too long before the mixture is to be applied to the material under treatment, since otherwise it may happen that actual congealing or solidification occurs. In the subsequent treatment in the hot gluing press the carbohydrates then presumably polymerize or combine with the remaining substances present, with the formation of viscid bodies which thus likewise serve so adhesive, so that the proportion of resin used may be reduced, and corresponding cheapening effected.

The further working up of the spread sheets of material, or of the treated foils, may take various forms, according to whether wet or dry gluing is desired.

In the case of wet gluing, the spread sheets are placed one upon the other while still in the wet state, and pressed under heat and compression. The treated foils may likewise be laid, while still wet, between non-spread sheets, and compressed together with the latter, thus uniting the whole.

In the case of dry gluing the spread sheets or treated foils are first left to dry. Drying is preferably effected at temperatures of 60–80° C or at ordinary temperature. Only sheets on which the resin coating has already dried, or dried treated foils together with non-spread sheets, are united together in the hot gluing press.

As compared with methods in which films (such as for example paper foils) treated with synthetic resins precipitable by means of water, for example in alcoholic solution, are employed for the gluing that according to the present invention affords the particular advantages, among others, of great cheapness and readier applicability even in extremely dry rooms.

According to the described method it is possible to produce for example multi-ply boards of all kinds, and the like, that is to say it is possible to stick wood to wood, and also wood to metal, or wood to compositions such as for example asbestos-cement compositions, and the like. In this manner it is also possible for example to stick various artificial compositions together or to various natural products.

Practical examples of the application of the method according to the present invention are for instance the following.

Examples

(1) Peeled veneers are spread with a 20% aqueous solution of a synthetic resin saponified with caustic soda, for example of a formaldehyde condensation product, laid one upon the other in the desired number of plies, and pressed with 8–12 kgs/cm² (114–170 lbs/in²) at a temperature of 130–150° C.

(2) As Example (1), except that the spread surfaces are dried before being superposed, at normal temperature or at a temperature not exceeding 80° C.

(3) Rotary press or other paper, or equally cotton fabric or other absorbent material, is steeped with a 24% aqueous solution of an artificial resin, for example a formaldehyde condensation product, saponified with caustic soda, or spread on both sides with the same, and inserted wet between two plies of wood veneer or between a ply of wood veneer and a sheet of asbestos-cement composition or metal, and pressed under 8–12 kgs/cm² (114–170 lbs/in²) at a temperature of 130–150° C.

(4) An absorbent material, such as paper or the like, is soaked or spread on both sides with a 24% aqueous solution of the type specified in Example (1), dried at normal temperature or at a temperature not exceeding 80° C, and then laid in any desired number between two plies to be stuck together, and further treated as given in Example (1).

(5) Tin or other metal foil is spread on both sides with an 18% aqueous solution of the type given in Example (1) to which there is added 6–8% of a natural resin soap, and then further worked up in the manner given in Example (3) or Example (4).

(6) Peeled veneers are treated with a 3% alum solution or with a solution of synthetic resin not unlimitedly diluable with water, and then coated with a 20–24% aqueous solution of an artificial resin condensed at least up to the point of the formation of two layers and then saponified with caustic soda, and diluable to any extent with water. Precipitates immediately become formed at the surface of the veneers, with the result that the resin is prevented from penetrating into the veneers. The veneers thus treated are then dried at ordinary temperature or at a temperature not exceeding 80° C, placed one upon the other in the usual manner and in the required number of plies, and pressed in a hot glueing press under a pressure of 8–12 kgs/cm² (114–170 lbs/in²) at a temperature of 130–150° C.

(7) As Example (6), except that the peeled veneers are treated first with the resin soap diluable to any extent with water, and then with a synthetic resin solution not unlimitedly diluable with water or with a 3% aqueous alum solution.

(8) To 1000 ccs of a 24% solution of resin soap unlimitedly diluable with water there is added 30–50 ccs of a 10–20% aqueous sugar solution. This mixture thickens gradually, until, after having been left to stand for 14–20 days, it sets to a homogeneous gel. For this reason it must be worked up within 10 days of having been prepared.

Products glued in the described manner have the same properties as those glued for example with "Tego film", while the manipulation and handling is simpler, and the expense involved very considerably reduced as a result of dispensing with expensive solvents.

HEINRICH PRÜFER.

Published May 11, 1943

Serial No. 132,695

ALIEN PROPERTY CUSTODIAN

METHOD AND ADVICES FOR VARYING THE STABILITY OF A SHIP

Hermann Hort, Berlin-Charlottenburg, Germany; vested in the Alien Property Custodian

Application filed March 24, 1937

My invention relates to a method and arrangements for controlling the stability of a ship.

The oscillation generating effect of the wave motion on a ship is, as is well known, the more effectively counteracted, the more the period of oscillation of the ship differs from the period of oscillation of the relative wave motion. In the most simplest manner, the period of oscillation of a ship may be influenced by varying the metacentric height by means of liquid tanks. If the ship has a small metacentric height, also the sea can exert only correspondingly small turning moments on the ship; furthermore, there is practically no resonance between the oscillation of the ship and the wave motion owing to the long period of oscillation of the ship. However, with decreasing metacentric height, also the stability of the ship decreases.

By reason of this fact it has been proposed to give, on the one hand, the ships a small metacentric height in order to reduce the oscillation generating effect of the wave motion and on the other hand, by designing the ship in a corresponding manner, to arrange that with increasing list of the ship, the stability thereof is increased again.

The ship stabilizing arrangement according to the invention is characterized by a tank arrangement for varying the metacentric height at which the motion of the tank liquid has a phase displacement of 0° with respect to the oscillation of the ship.

The stabilization may be effected by a corresponding variation of the oscillation of the ship with respect to the period of oscillation of the relative wave motion by putting into and out of operation the tank arrangement which may consist of one or more units. However, the arrangement may also be so designed that with a tank in operation, the metacentric height amounts exactly or approximately to zero; in the case of a danger, the metacentric height increases owing to the fact that the motion of the liquid is prevented, for instance, by filling up the tank with liquid.

The motion of the liquid may also be interrupted, as hereinafter described, by other means as well as automatically.

Consequently, to vary the metacentric height of the ship, the so-called principle of the "free surfaces" is taken advantage of. In connection with the application of this principle, means are, however, employed at the same time, by means of which the danger is eliminated which might occur when applying this principle. To this end, as above described, the tank arrangement operating according to the principle of the "free surfaces" may be subdivided into various units which may separately be put into and out of operation. By the subdivision of the tank arrangement into the above-mentioned units besides the reliable control of the motion of the tank liquid also the advantage is obtained that the metacentric height may be gradually varied and, therefore, the period of oscillation of the ship may be adjusted (gradually) to any values within certain limits.

Furthermore, the tanks for varying the metacentric height are provided according to the invention with means for automatically interrupting the motion of the tank liquid upon the attainment of a given angle of inclination, for instance, of 3 to 4°. Such means consist according to the invention, for instance, in the selection of a corresponding distance between the mouth of an air inlet and outlet conduit and the tank liquid level.

In the accompanying drawings are shown some embodiments of my invention in diagrammatic form.

Fig. 1 is a top view of a ship with a tank arrangement according to the invention for varying the period of oscillation of the ship.

Fig. 2 is a cross section on the line II—II of Fig. 1.

Fig. 3 is a cross section on the line III—III of Fig. 1.

Fig. 4 is a cross section on the line IV—IV of Fig. 1.

Fig. 5 shows one embodiment of my invention.

Fig. 6 shows a modification of my invention.

Fig. 7 shows another modification of the tank arrangements according to the invention provided with means for automatically interrupting the motion of the liquid.

Fig. 8 is a cross section of another modification according to the invention.

Fig. 9 is a top view thereof.

Fig. 10 shows another modification of my invention.

To vary the period of oscillation of the ship, the metacentric height is varied in the embodiment shown in Figs. 1 to 4 with the aid of four tank groups **2**, **3**, **4** and **5** accommodated in the front half of the ship **1**. Each tank group consists, as indicated in Fig. 4 in connection with the tank group **2** shown in cross section, of two tanks **6** and **7** arranged at opposite sides of the ship and communicating with one another through a liquid transverse channel **8** and an air

transverse channel 9. In the air channel 9 is arranged a shut-off device 10. The sectional area of flow of the liquid channel 8 and of the air channel 9 is so amply dimensioned that when the shut-off device 10 is opened to the full extent the phase displacement is zero between the motion of the tank liquid and the motion of the ship.

For a better understanding of the operation of the tank group, it is at first assumed that the air channel 9 is omitted and that both tanks 6 and 7 are open at the top and that a shut-off device is provided in the water channel 8. (Such an arrangement would also be possible in practice and is within the scope of the invention). If the above-mentioned shut-off device 8 in the water channel is closed, it is natural that the tank liquid is almost rigidly coupled with the ship, i. e., it forms a portion of the ship body and increases the metacentric height as compared to the case in which there would not be any liquid.

If the above-mentioned shut-off device in the channel 8 is, however, in the open position, the tank liquid, as above described, does not participate in the motion of the ship in the case of a sufficiently large cross-sectional area of the channel 8, i. e., it behaves as if it were a portion of the sea water; in other words, the tank liquid forms free surfaces in the ship. That means that in the case of an open shut-off device the metacentric height of the ship is smaller than if it were closed.

The shut-off device when arranged in the liquid channel 8 would have relatively large dimensions. The dimensions of the shut-off device may be considerably reduced if, as shown in Figs. 1 and 4, both tank halves are closed at the top and connected with one another through an air channel 9 and if the shut-off device 10 is arranged in this air channel. The operation, however, is substantially the same as in the above-described case.

In short, by opening and closing the shut-off device 10, the metacentric height and, therefore, the period of oscillation of the ship may, consequently, be varied. Depending upon the desired range within which the period of oscillation of the ship is to be varied, one or more, for instance four tank groups are provided which will now be described with reference to Fig. 4.

As above described, it was considered that the shut-off device 10 is completely opened or completely closed. The shut-off device may also be brought into a position lying between these two end positions with the result that the tank group in question operates subsequently as a passive anti-rolling tank. This is of importance in connection with the following case: As already mentioned, the period of oscillation of the ship may, of course, be only varied within certain limits with the aid of the shown or similar auxiliary means.

It is assumed that the period of oscillation of the ship in the case considered lies above the period of oscillation of the relative wave motion and that the last-mentioned period of oscillation varies to such an extent as to approach the period of oscillation of the ship. It is possible to increase the period of oscillation of the ship by a corresponding adjustment of the tank groups 2—5 and to evade in this manner the period of oscillation of the relative wave motion. If, however, the period of oscillation of the relative wave motion is increased, it is then necessary according to the invention to reduce again the period of oscillation of the ship. In this case, when regulating the range of resonance must be traversed with the result that the ship may temporarily be rolled to a great extent. To keep the amplitude of the oscillation in this case within reasonable limits, preferably one or more of the tank groups 2 to 5 serving to vary the metacentric height of the ship are at first all temporarily adjusted as anti-rolling tanks and then, as the case may be, as detuning tanks (since, as already described, the period of oscillation of the ship is varied by the last-mentioned tanks, these tanks will be hereinafter referred to as detuning tanks) and the variation of the adjustment of the valves 10, 11 etc. necessary to vary the period of oscillation of the ship with respect to the period of oscillation of the relative wave motion will gradually be effected or at first all tank groups 2 to 5 will be employed as rolling tanks and then as detuning tanks in order to vary the period of oscillation of the ship.

In one embodiment, the tanks may also be so dimensioned as to permit a reduction of the metacentric height of the ship to zero or approximately to zero so that the ship will be unstable or has a very long period of oscillation. In this embodiment, a further advantage may be obtained according to the invention by dimensioning the sectional area of flow of the tank groups 2 to 5 in such a manner that when the shut-off devices 10 to 13 are opened to the full extent, the phase displacement will be zero only in the case of the above-mentioned long oscillations of the ship, but that a phase displacement of approximately 90° occurs automatically, if the ship for any reasons whatever carries out shorter oscillations. That implies so to say a safety device which is switched in automatically, insofar as in the case of more rapid oscillations of the ship, the tank group or groups in question are converted into passive anti-rolling tanks.

Under circumstances, also a particular anti-rolling arrangement 14, also effective for long periods of oscillations of the ship, may be provided and may be designed in the form of a passive or also of a controlled arrangement, if necessary, equipped with an activating drive, such as a motor-driven propeller, blower or the like. In Fig. 2 which shows a cut through the tank group 14 of Fig. 1 acting as an anti-rolling arrangement is shown a passive tank group having two tanks 17 and 18 communicating with one another through a water transverse channel 19. Both tanks 17 and 18 communicate at the top with the outside atmosphere through a connecting branch 20 and 21 respectively. In each branch is arranged an adjustable shut-off device 22 and 23 respectively. By these devices the throttling may be adjusted to the desired degree and, therefore, the desired phase displacement between the oscillation of the ship and the oscillation of the tank liquid within the limits determined by the tank group. Furthermore, the water channel 19 may be throttled, for instance, as indicated at 24 and 25.

Finally, an arrangement is provided for preventing the ship from getting into a static inclined position consisting in the embodiment shown of two sets 15 and 16 (Fig. 1) or an arrangement serving to bring the ship into the upright position in the case of an unstable ship.

Each set consists, as will be seen from the cut through the set 15 shown in Fig. 3, of two tanks 26 and 27 arranged at both sides of the ship and

communicating with one another through a liquid channel **28**. In the liquid channel is provided a propeller **29** operatively connected with a motor **30** and serving as an activating drive. To enable a reversal of the direction of displacement of the tank water between backboard and starboard and vice versa, the propeller **29** may be designed in the form of a controllable propeller or also the driving motor **30** in the form of a reversing motor. The control is effected through a control device which determines the statical inclined position of the ship. As to the particular design of the control device reference may be had to the device described in the German patent 630,637 or in the British patent 458,616.

The tank group may also be operated automatically if it is the case of adjusting the tank group with respect to the period of oscillation of the ship to be determined continuously, for instance, by time measurements. To this end, the period of oscillation of the relative wave motion may be determined, for instance, with the aid of a calculating device to which the direction of travel of the ship relatively to the wave motion, the speed and further the period of oscillation or the length of the period of the wave motion determined by a subjective or objective observation are transmitted. By means of a member whose position is a measure for the above-mentioned magnitude, a follow-up motor or the like is adjusted which in turn adjusts within given limits the period of oscillation of the ship to the greatest possible departure from the period of oscillation of the relative wave motion. The tank group may also be operated by hand in accordance with the period of oscillation of the relative wave motion determined in the above-mentioned manner and with the period of oscillation of the ship, also determined as above described.

Tele-indicating systems are preferably employed which indicate the positions of the shut-off devices **10** to **13** on the conning bridge and under circumstances at other points so that the signals necessary in carrying out the method according to the invention may be transmitted from the above-mentioned points.

To reduce the costs of the installation, it is advisable to use at the same time the tanks required for the liquids, for instance, the fuel tanks etc., for the purposes under consideration, i. e., to design these tanks in such a manner as shown in Figs. 2 to 4.

In order to rapidly neutralize the kinetic forces of flow in the detuning tanks, either viscous liquids having a great inner friction are to be employed or perforated plates of sheet iron or the like are to be arranged in the path of the flowing liquid. Under circumstances, also the free surfaces of the tanks are to be covered with suitable damping means; for instance, viscous liquids or floating bodies.

Figs. 5 to 10 show embodiments of tank arrangements for varying the period of oscillation of the ship which are provided with means for automatically interrupting the motion of the tank liquid. The arrangement is preferably designed in such a manner that the metacentric height in the case of a free movement of the liquid, that is in the case of a free surface, has a small value; for instance the zero value. This metacentric height is automatically increased by influencing the tank arrangement if a certain list angle of the ship is exceeded. The invention relates both to the case in which the metacentric height increases suddenly upon exceeding a predetermined list and to the case in which the metacentric height increases, under circumstances, steadily with increasing list.

Fig. 5 shows a tank arrangement corresponding to that of Fig. 4. The tank group consists of two tanks **31** and **32** arranged at both sides of the ship **1** and connected with one another through the water channel **33** and the air channel **34** in which a shut-off device **35** is provided.

The operation of this tank arrangement is exactly the same as that described in connection with Fig. 4. The tank liquid forms, when the shut-off device **35** is closed, a portion of the ship body, and the metacentric height is increased, whereas when the shut-off device is open the tank liquid forms a free surface in the ship and the metacentric height is reduced. Consequently, the metacentric height may be alternately increased or reduced.

The invention may also be carried into practice as shown in Fig. 5 in the manner that the ends of the air pipe **34** do not terminate at the tops of the tanks **31** and **32** but project into the same and end at a point which is so high above the tank liquid level that the tank liquid enters the air pipe **34** at an inclined position of the ship of a given magnitude, say, of 3° to 4°. In this manner, such a throttling is brought about that the property of the tank liquid to form a "free surface" is lost with the result that the metacentric height of the ship increases automatically. A similar effect is, therefore, brought about automatically as if the shut-off device **35** were being closed. By varying the contents of the tank arrangement, the angular value may be varied, at which the metacentric height increases. Such a variation may be obtained by means of the embodiment shown in Fig. 7, even without varying the tank liquid.

The effect above-described would, of course, also be brought about if the air pipe **34** would end at the top of the tanks **31** and **32** and if the distance between the liquid level and the covers **35**, **37** of both tanks were chosen in accordance with the above-described forms of invention. However, in this case powerful impacts would be exerted on the covers of the tanks **31** and **32** by the tank liquid. This is prevented if as shown in Fig. 5 the ends of the air transverse pipe **34** project into the tanks **31**, **32**; for in this case, as soon as the level of the tank liquid reaches the end of the air transverse pipe **34**, an air pad acting in the form of an air dashpot is enclosed between the tank cover **35** or **37** and the end of the air transverse pipe, and prevents the impacts of the tank liquid on the tank cover.

As shown in Fig. 5, floats **38** and **39** are provided according to the invention and are so guided along rods **40** and **41** secured to the air transverse channel **34** that upon exceeding a given list of the ship, the air transverse channel is closed at the inclined side of the ship. In this manner, the above-mentioned effect is still increased and at the same time water is prevented from entering the air transverse channel. It is advisable to support the floats **38** and **39** by springs.

In the embodiment shown in Fig. 6, both tanks **31** and **32** are placed in communication with each other through a water transverse channel **33** of sufficiently large cross-sectional area and with the outside atmosphere through connecting branches **42** and **43**. These branches may be closed by shut-off devices; for instance flaps **44**

and 45. Both flaps may be held in the open position by means of electromagnets 46 and 47. The circuit of the electromagnets extends through a hand-operated switch 48 and a contact device which consists of a contact segment 49 fixed relatively to the ship and of a contact arm 50 secured to the axis of a rolling angle responsive instrument 51. The latter may as usual be designed in the form of a gyroscope. The contact segment 49 has such a width that upon attaining a predetermined list of the ship, the contact arm 50 moves away from the contact segment 49 thus deenergizing the magnets 46 and 47. In this case, the flaps 44 and 45 close and the metacentric height of the ship is, therefore, increased, automatically. Also by the hand-operated switch 48, the magnets 46 and 47 may be deenergized and, therefore, the installation may be shut down. As long as the magnets 46 and 47 are deenergized, the tank liquid forms a portion of the ship body upon which depends the metacentric height of the ship.

It is understood that the flaps 44 and 45 may be replaced by other shut-off devices and, under circumstances, may be combined to form a single shut-off member arranged in the air transverse channel or in the water transverse channel.

For the purposes of the invention, for instance, fuel tanks may, of course, be employed as already above mentioned. When fuel is delivered from the fuel tank the mean liquid level lowers. For this reason, the connecting branches 52 and 53 through which both tanks 31 and 32 communicate with the outside atmosphere are each provided as shown in Fig. 7 with a telescopically designed part 54 and 55 respectively. With the aid of a rack and pinion gear 56 and 57 respectively, the parts 54 and 55 may be always adjusted to the desired distance from the liquid level. In this manner, it is easily possible to so adjust the tubular portion 54 and 55 according to the scales allotted to the gears 56 and 57 and to the indications of a liquid gauge indicating the liquid level in the tanks 31 and 32 that upon the attainment of a given list of the ship the liquid at the inclined side of the tank enters the conduit 54 or 55. If desired, the conduits 54 and 55 could be provided with floats as shown in Fig. 5. 58 and 59 are, for instance, hand-operated shut-off devices arranged in the branches 52 and 53.

In Fig. 7 it is assumed that the gears 56 and 57 are actuated by means of a crank. Of course, it is also possible to provide an automatic adjusting device which is controlled in accordance with a water gauge.

In the embodiments shown in Figs. 1 to 7 so called high tanks are employed. Also by the use of flat tanks as shown in Figs. 8 and 9 the invention may be carried into practice. The cover of the tank 60 consists of two plane halves 61 and 62 inclined towards the center line of the ship. They are so inclined to the horizontal that the tank liquid at a certain list of the ship of, for instance, 4° comes into contact with either cover half 61 or 62. The tank 60 is preferably filled up to such an extent that the liquid level comes into contact with the line of intersection of the two cover halves 61 and 62 as shown in Fig. 8.

According to the above considerations the embodiment shown in Figs. 8 and 9 operate as follows: As long as the angle of list of the ship does not exceed a given value, the tank 60 forms a "free surface." This property is lost in part if the list of the ship exceeds the above-mentioned angle. The portion of the tank liquid in the one half then forms a portion of the ship body with the result that this portion of the tank liquid contributes to increase the metacentric height of the ship.

63 and 64 are branches through which the air spaces of two tank halves are in communication with the outside atmosphere.

It is advisable to build in web plates 65 in order to damp to a certain extent the water motion if the ship is inclined at either side. The air may escape from the single chambers formed of the plates 65 through openings 66.

The tanks according to the invention could be provided with a constant amount of liquid. However, in this case it would not be easily possible to put the tanks at will into and out of operation; that is to say to vary the metacentric height of the ship with the aid of the tank arrangement without list of the ship. This may be accomplished by providing means for varying the contents of the tank. It is evident that when the tank is completely charged with liquid, the tank arrangement is always shut down so that the contents of the tank is to be added to the ship body determining the metacentric height of the ship.

In the embodiment shown in Figs. 8 and 9 besides the tank 60 a storage tank 67 is provided for the above-mentioned purpose. The storage tank 67 has preferably such a capacity that the liquid contained therein suffices to fill up the residual space of the tank 60, i. e., the space which remains free when filling up the tank 60 according to Fig. 8. By means of a pump 69 driven by a motor 68 and of the conduit 70, the liquid of the tank 67 may be forced into the tank 60. In the partition wall 71 between both tanks 60 and 67 is arranged a hand-operated shut-off device 72. Upon opening the latter, a portion of the tank liquid flows from the tank 60 back into the tank 67.

Measuring devices are preferably provided for indicating the corresponding contents of the tank 60. 73 and 74 are branches for placing the tanks in communication with the outside atmosphere.

Instead of making the chamber cover 61, 62 of two planes it might also be uniformly curved so that with increasing list of the ship, the metacentric height of the ship increases and vice versa. According to the invention the double bottom of the ship may be employed as a tank by arranging the openings provided within the tank space in the keel and in the longitudinal girders in such a manner that the lines passing through the apexes of these openings are inclined to the horizontal in accordance with the angle of inclination of the ship at which the tank arrangement should automatically increase the metacentric height of the ship.

By the use of the double bottom as a tank, a considerable saving in space is obtained. By arranging the openings in the keel and in the longitudinal girders in such a manner that the apexes of these openings lie on a straight line inclined at a given angle to the horizontal, the advantage is obtained in that by the use of the simplest means the metacentric height increases automatically upon exceeding a predetermined angle of inclination.

Fig. 10 shows a transverse section of such an embodiment.

As will be seen from Fig. 10, the central portion of the keel 75 and the central portion of the other

longitudinal girders **76** are provided with openings **77** and **78** so that the single chambers form between these parts are in communication with one another through said openings. The individual openings are so disposed that the lines **79** and **80** drawn through the apexes of the openings are inclined at a certain angle β, preferably at an angle of 3° to 4°, to the horizontal. **81** and **82** are conduit branches through which the air space of the tank arrangement is in communication with the outside atmosphere. With a normal charge of liquid, the level of the tank liquid when the ship is in a horizontal position passes approximately through the apex of the opening **77**. Consequently, the arrangement operates as follows:

As long as the angle of inclination of the ship is smaller than the above-mentioned angle β, the tank liquid forms a "free surface" and reduces the metacentric height, i. e., the stability of the ship. If the angle of inclination of the ship attains the value β, the tank liquid interrupts the free air connection between the single chambers of the double bottom with the result that the tank liquid must partake in the motion of the ship brought about by an increase of the list of the ship beyond the anglar value β. This means, however, that in this state the tank liquid at the inclined ship side and substantially also the liquid at the other side of the ship form so to say a portion of the ship body and, consequently, the metacentric height of the ship increases rapidly with an increasing list of the ship. That is to say if the angle of inclination of the ship exceeds the value β, the metacentric height of the ship increases automatically, whereas if the list of the ship decreases below the value β, the metacentric height of the ship attains its minimum value.

In the preferred embodiment sea-water is employed as tank liquid and, to this end, the tank is connected with the sea through a conduit **83**. In the conduit **83** is arranged a propeller **84** which is operatively connected with a motor **85** as well as a shut-off device **86**. To fill up the tank, the shut-off device need only be opened. The sea-water then flows by itself into the tank. The tank is normally charged with liquid up to the level shown in Fig. 10. When the liquid attains this level, the shut-off device **86** must be closed.

If the tank arrangement is to be put out of operation, this may be effected in a simple manner by charging the tanks with liquid beyond the normal filling by opening the shut-off device **86** until at all points the tank contents forms so to say a portion of the ship body so that there is no longer a "free surface". Consequently, when the tank arrangement is put out of operation, the metacentric height of the ship increases up to an extent depending upon the construction of the chambers. If the tank arrangement is to be put again into operation, the excess charge of the tank is pumped back into the sea with the aid of the propeller **84**. To prevent the tank from being completely emptied which might lead to a disturbing instability of the ship, it is advisable that the end of the conduit **83** within the tank contacts with the normal liquid level as shown.

Instead of the connection with the sea as shown in Fig. 10, various tanks might be formed within the double bottom as will be seen from Figs. 8 and 9, one of which serves for the above mentioned purposes, whereas the other only for the reception of that amount of liquid which is necessary to shut down the tank arrangement. This may be accomplished in the manner as above described. Furthermore, by the use of the double bottom differently long tanks may be provided lying in series in the direction of the longitudinal axis of the ship in order to gradually reduce, as the case may be, the metacentric height of the ship.

HERMANN HORT.

PUBLISHED

MAY 11, 1943.

BY A. P. C.

H. HORT

METHOD AND ADVICES FOR VARYING THE STABILITY OF A SHIP

Filed March 24, 1937

Serial No. 132,695

4 Sheets-Sheet 1

Fig. 1

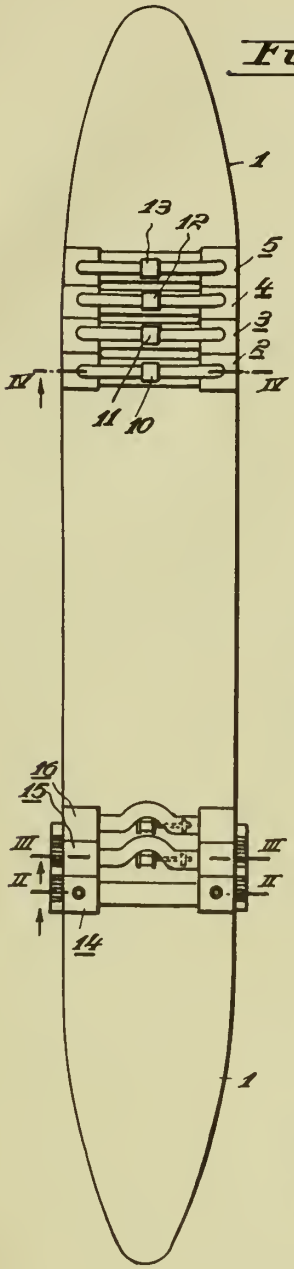

Fig. 4

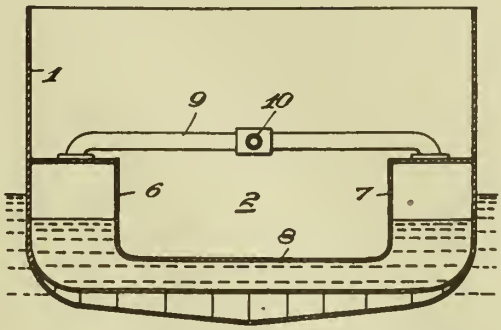

Fig. 3

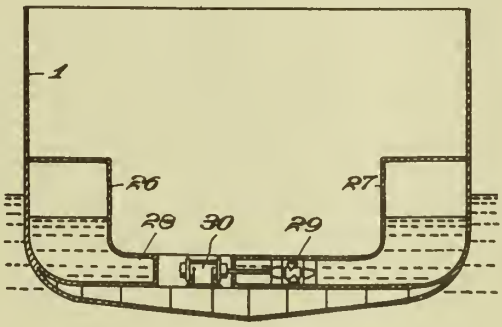

Fig. 2

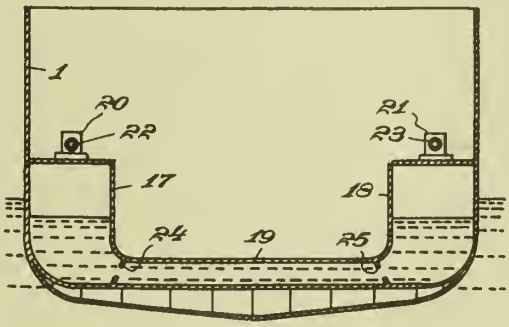

Inventor

Hermann Hort

by Knight Bros

Attorneys

PUBLISHED

MAY 11, 1943.

BY A. P. C.

H. HORT

METHOD AND ADVICES FOR VARYING THE STABILITY OF A SHIP

Filed March 24, 1937

Serial No. 132,695

4 Sheets-Sheet 2

Fig. 5

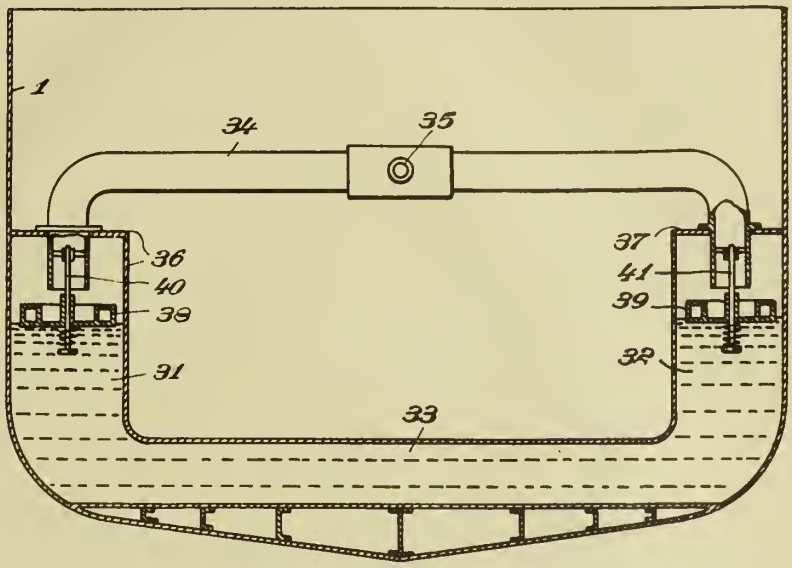

Fig. 6

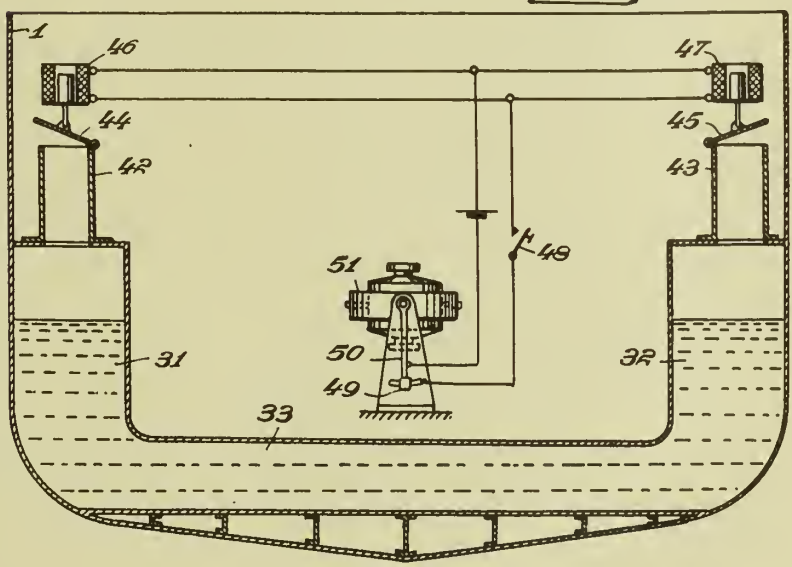

Inventor

Hermann Hort

by Knight Bros

Attorneys

PUBLISHED

MAY 11, 1943.

BY A. P. C.

H. HORT

METHOD AND ADVICES FOR VARYING THE STABILITY OF A SHIP

Filed March 24, 1937

Serial No. 132,695

4 Sheets-Sheet 3

Fig. 7

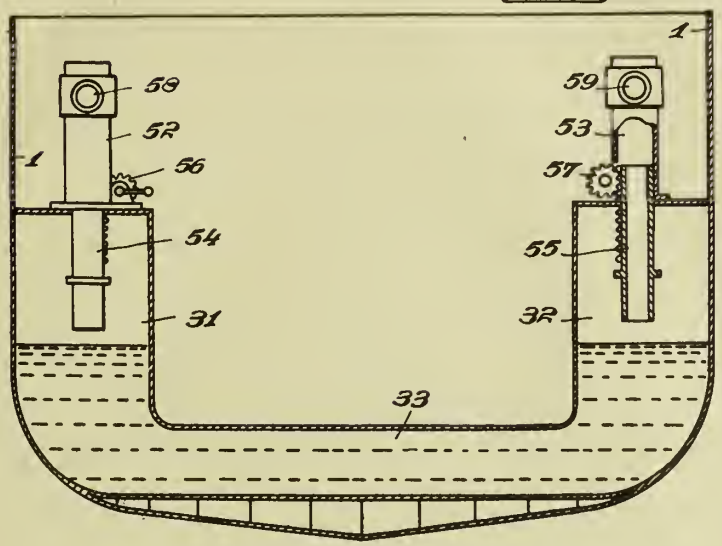

Fig. 10

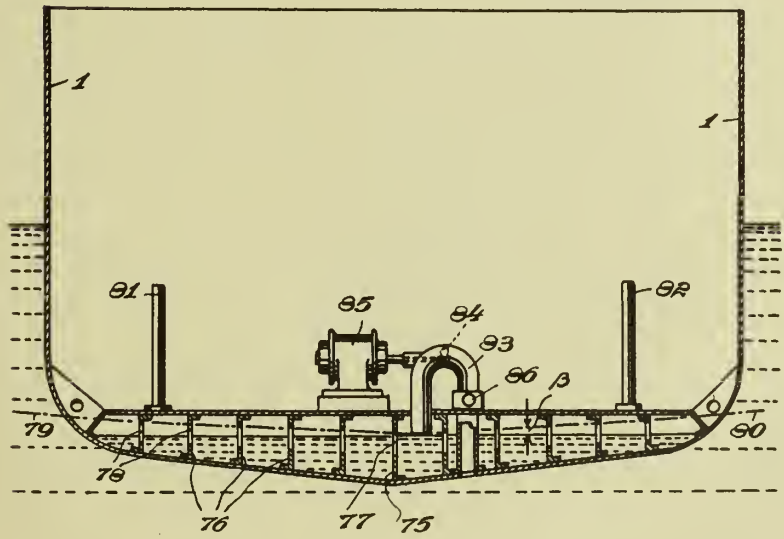

Inventor

Hermann Hort

by Knight Bros

Attorneys

PUBLISHED

MAY 11, 1943.

BY A. P. C.

H. HORT

METHOD AND ADVICES FOR VARYING THE STABILITY OF A SHIP

Filed March 24, 1937

Serial No. 132,695

4 Sheets-Sheet 4

Fig. 8

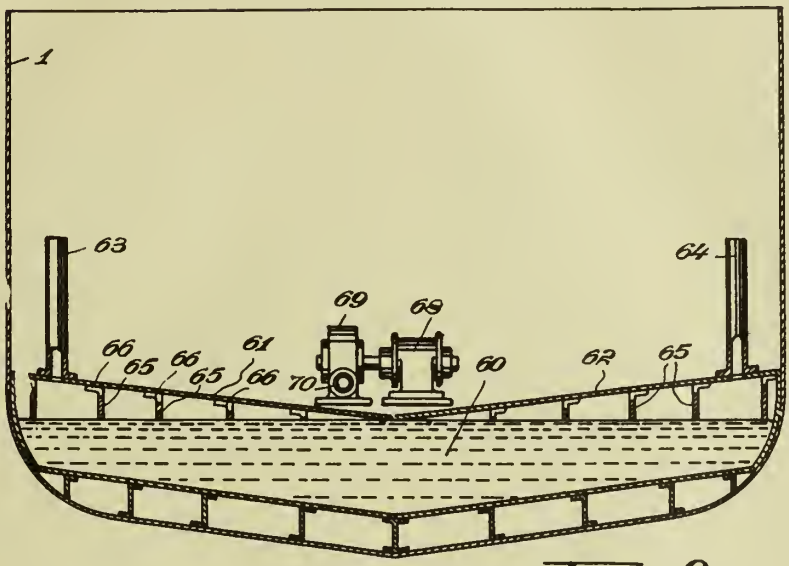

Fig. 9

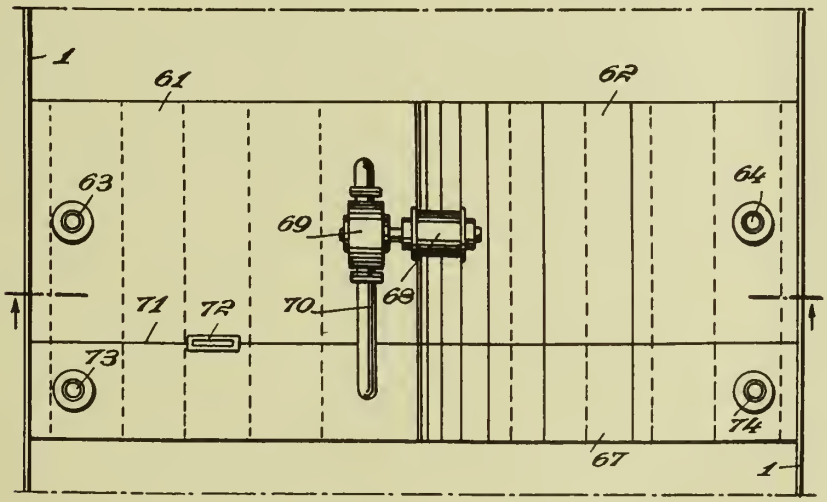

Inventor

Hermann Hort

by Knight Bros

Attorneys

Published May 11, 1943

Serial No. 134,706

ALIEN PROPERTY CUSTODIAN

STEAM POWER PLANT WITH HEAT ACCUMULATOR

Paul Gilli, Vienna, Austria; vested in the Alien Property Custodian

Application filed April 3, 1937

The invention refers to steam power plants, for example power stations, with one or several heat accumulators, filled either entirely or partly with water, and from which steam is taken for operating a prime mover. The pressure of the accumulator plant drops when supplying steam, and increases again when the accumulator plant is charged. Thus the accumulator pressure fluctuates between a maximum pressure (accumulator fully charged) and a lowest pressure (accumulator discharged). The accumulator shells must be constructed for the maximum pressure.

Hitherto in such plants, especially in those with steam boilers for very high pressures, the steam accumulators were inserted in the low pressure net, the opinion existing that for constructive, thermal and financial reasons it was of advantage to substitute to the greatest extent the boiler water spaces by heat accumulators in the low pressure net. As the storage capacity of 1 cbm water decreases with increasing pressure one assumed that the plant cost for the same storage capacity was far more favourable in the low pressure range than in the high pressure range.

The aim to avoid water spaces in the high pressure net was carried through more and more and led for example to certain boiler constructions, like the Sulzer one tube boiler and the Benson boiler, operating without any water space whatever. Plants with such boilers are as a rule provided with accumulators in the low pressure net. The maximum pressure of steam accumulator plants installed in power stations has hitherto not exceeded 16 atm. In one special case a pressure of 24 atm. was exceptionally provided. The best known of these plants is the accumulator plant at the power station Charlottenburg with a maximum pressure of 13 atm. The most modern Ruths accumulator plant at the Power Station Amsterdam has a maximum pressure of 15 atm.

The present invention applies to a new method differing entirely from the development hitherto. According to the invention accumulators are no longer to be provided in steam power plants for low pressure, but for a maximum pressure of more than 60 atm.

Hitherto it was assumed that the efficiency of the accumulator plant decreases with increasing maximum pressure. According to the invention, however, the efficiency increases with maximum pressures of more than 60 atm, as shown in Fig. 1.

In this diagram the costs of high pressure and low pressure accumulator plants are compared. In both cases the same capacity and extent of delivery is assumed.

On the abscisse the high pressures are entered and on the ordinate the purchase costs of the accumulator plant. As the prices vary according to the market and as the absolute values are of no importance here, but moreover, the relation of the prices to each other, only relative values are entered.

Curves K_{15}, K_{30} and K_{40} represent the price of the accumulator plant with a lowest discharge pressure of 15, 30 or 40 atm. The price of the low pressure accumulator normally used hitherto and working between 15 and about 2 atm. is marked with K_N; the curves show that the purchase costs of high pressure accumulators decrease with increase of maximum pressure.

The lowest entrance pressure of turbines of older type still in operation today is about 15 atm. If the high pressure accumulator plant is discharged to this entrance pressure of 15 atm., then the advantage of the high pressure accumulator over the low pressure accumulator begins at a maximum pressure of 60 atm.

An increase in pressure beyond 200 atm. is of no advantage. In fact the price curve K_{40}, i. e. for a lowest discharging pressure of 40 atm., climbs again. An accumulator fully charged up to a maximum pressure of more than 200 atm. can only be discharged to 30 atm. as for reasons explained later its water contents are entirely evaporated at such a pressure.

At discharge pressures of about 20 atm. upwards the lowest plant costs lie between maximum pressures of 100 and 200 atm.

The reasons for the surprising result that in power stations high pressure accumulators of more than 60 atm are more economical than low pressure accumulators are to be found above all in the fact that in cases of storage in such high pressure ranges the shells themselves take up a considerable part of the heat to be stored, giving it up again during the discharge period. The iron heat stored in the accumulator walls considerably increases the storage capacity.

Fig. 2 explains these conditions. Curves *a* and *b* represent the average storage capacity per cbm accumulator contents in a plant to be discharged at a pressure of about 30 atm., curce *a* representing the steam amount taken from the accumulator plant without considering the iron heat, curve *b* showing the capacity of the accumulator plant including iron heat. The course of curve *a* shows that the increase in capacity per atm. becomes less with increasing maximum pressure, and that in the upper pressure range an increase of the maximum pressure hardly enlarges the capacity.

The course of the capacity differs entirely if the iron heat is taken into consideration. Due to the iron heat the storage capacity of the accumulator increases with rising maximum pressure.

In addition to the iron heat the improvement of the specific steam consumption of the prime mover is a further reason for the economic superiority of the high pressure accumulator over the low pressure accumulator. The average steam consumption of the low pressure accumulator plant at Charlottenburg Power Station amounts to 8.67 kg/kwh. In a power plant with high pressure accumulator the steam taken from the accumulator is throttled to entrance pressure of the turbine and superheated. The steam consumption is thus improved considerably and amounts to about 4.8 kg/kwh. This is also one of the important reasons why the accumulator plant in the high pressure range has a considerably higher kwh capacity than in the low pressure range.

As in high pressure accumulators the accumulator steam is throttled to the entrance pressure of the turbine and the pressure thus remains constant, the accumulator turbine can operate at full load during the entire discharge period. In the case of low pressure accumulators the specific volume of the accumulator steam increases with increasing discharge, so that the output of the accumulator turbine decreases during discharge period and at the end of the discharging period amounts only to a fraction of the full load.

Considerable economic advantages are obtained by applying that invention to accumulator plants which store heat generated by electric current.

These plants had a comparatively low efficiency of about 15–18%, the accumulator having to be charged with about 6–7 kwh in order to obtain one kwh of stored energy. The storage of electric energy by means of high pressure accumulators with maximum pressures of more than 60 atm. according to the present invention enables an improvement in efficiency to more than 25%, i. e. for 1 kwh power to be supplied by the accumulator plant a charging of about only 4 kwh is necessary.

The heating of the accumulator water to the high temperatures required is best effected in a heater, which can, for instance, be constructed in such a way that the heat elements are arranged round a tube through which the accumulator water flows.

The efficiency can be improved still further if back-pressure steam or bleed steam is taken from the prime mover and supplied to a heat consumer, e. g. a hot water heating plant. It is also of advantage to preheat the water to be fed into the accumulator plant by means of bleed steam of the prime mover.

The heat generated by means of electric current can also be transferred to the accumulator water by means of a liquid with high boiling point, the heater need then not be constructed for high pressures.

Figs. 3–7 show examples of the invention. According to Fig. 3 the accumulator plant is charged by means of superheated, non-condensing low pressure steam, according to Fig. 4 by means of high pressure steam, and according to Figs. 5–7 by means of electric current. In the plant according to Fig. 3 a steam generating plant consisting of boilers 1 supplies steam to turbine 2. Preheater 4 is formed as a mantle surrounding part of main steam line 3. 5 represents the high pressure accumulator. Line 6, in which pump 7 and regulating valve 8 are inserted, leads to preheater 4. Water from the accumulator passes through this line into the preheater. The steam thus generated passes through line 9 into the accumulator. Steam is taken from the accumulator by means of reducing valve 10. The accumulator steam is superheated by superheater 11 and flows through line 12 into main steam line 3, where the accumulator steam mixes with the boiler steam and passes into turbine 2.

Naturally it is also possible to operate turbine 2 with accumulator steam only, for example during the time when boiler 1 is started.

Accumulator valve 8 can be governed depending on the steam temperature before turbine 2, or depending on the steam pressure in the main steam line.

The pressure of the boiler plant can, for example, amount to 30 atm. and the superheating temperature to 450°. The maximum pressure of the accumulator plant can, for example, amount to 160 atm., a pressure range of 160–30 atm. being used for the storage process. The steam taken from accumulator 5 must be substituted after completion of discharge by pumping water, e. g. condensate from tank 13, into the accumulator.

In the example according to Fig. 4 the plant contains high pressure boilers 21 of 120 atm. and low pressure boilers 22 of 15 atm. Back pressure turbine 23 is inserted between the two nets. Condensating turbine 24 is connected to the low pressure net. The accumulator plant consists of 3 containers 25, 26, 27 connected in series. Automatic valves are inserted in the connecting lines. 28 is the charging valve and 29 the discharging valve. Superheater 30 is arranged in accumulator 25. The maximum pressure of the accumulator plant amounts to 120 atm. Contrary to the example shown by Fig. 3 the accumulator plant is charged directly by means of high pressure steam. Charging valve 28 can be governed from high pressure net and discharging valve 29 from low pressure net.

In Fig. 5 the high pressure accumulator is marked 31, the steam turbine 32. The accumulator water is heated in the heater by means of electric current. Owing to its different temperature the water circulates through lines 34 and 35. The water taken from the accumulator in form of steam can be substituted either by pumping a corresponding quantity of water as a whole into the accumulator after completion of the discharging period, or by supplying water to the accumulator during charging period. In this case a non-return valve can be provided in pipe line 34 and the water supply can be regulated by means of valve 37.

Fig. 6 represents a plant, in which the turbine steam is used for hot water generation. There are two accumulator tanks 41 and 42. The charging system of the accumulator plant consists of lines 43, 44, pump 45, regulating valve 46, heater 47 and line 48. Accumulator 42 is charged by steam supplied from accumulator 41. Steam discharge is effected by means of reducing valve 49 and superheater 50. The steam flows from here into turbines 51. Surface preheater 52 and mixing preheater 53 are connected to the turbines. The hot water is pumped by pump 54 into flow-forward line 55. 56 is the flow-back line. Accumulator 57 is inserted between flow-forward and flow-back lines. The water to be heated is discharged by means of pump 58, and

can be regulated by the temperature of the heated water behind preheater 53. Line 59 leads from forward-flow line 55 into the charging system. Water is led into the accumulator plant by means of this line. Throttling valves 60 and 61 are alternately opened or closed.

In Fig. 7 the accumulator plant 71, 72 is laid out similar to Fig. 6. For the charging of the accumulator plant a liquid with high boiling point is used, circulating by means of pump 73 between heater 74 and accumulator 71. Equalising tank 75 is connected to the back-flow. Charging can be regulated by means of valve 76.

Liquids with high boiling point can also be used for superheating the accumulator steam. For this purpose a heat exchanger can be provided in line 77. It is also of advantage, especially if the accumulator steam is to be superheated by means of liquid, to store the liquid with high boiling point in a separate tank. The accumulator can be connected to line 77 at the same time substituting equalizing tank 75.

The plant can be simplified further by using the preheater heating the accumulator water during charging for the superheating of the accumulator steam during discharging.

In addition to the examples described in the foregoing, further arrangements are possible.

PAUL GILLI.

PUBLISHED

MAY 11, 1943.

BY A. P. C.

P. GILLI

STEAM POWER PLANT WITH HEAT ACCUMULATOR

Filed April 3, 1937

Serial No. 134,706

4 Sheets-Sheet 1

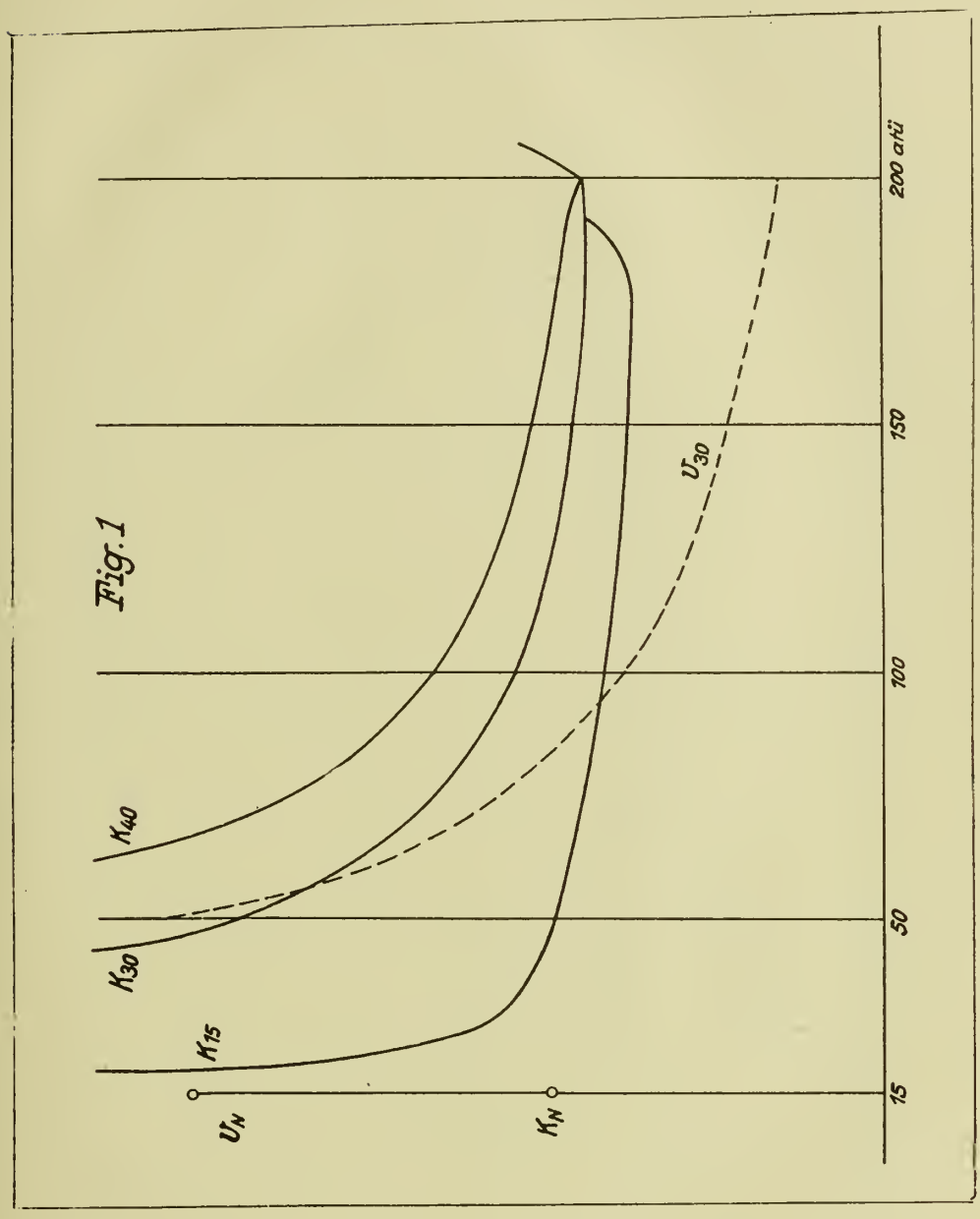

Inventor:
Paul Gilli
By Wm. J. Kelland
his Attorney

PUBLISHED

MAY 11, 1943.

BY A. P. C.

P. GILLI

STEAM POWER PLANT WITH HEAT ACCUMULATOR

Filed April 3, 1937

Serial No. 134,706

4 Sheets-Sheet 2

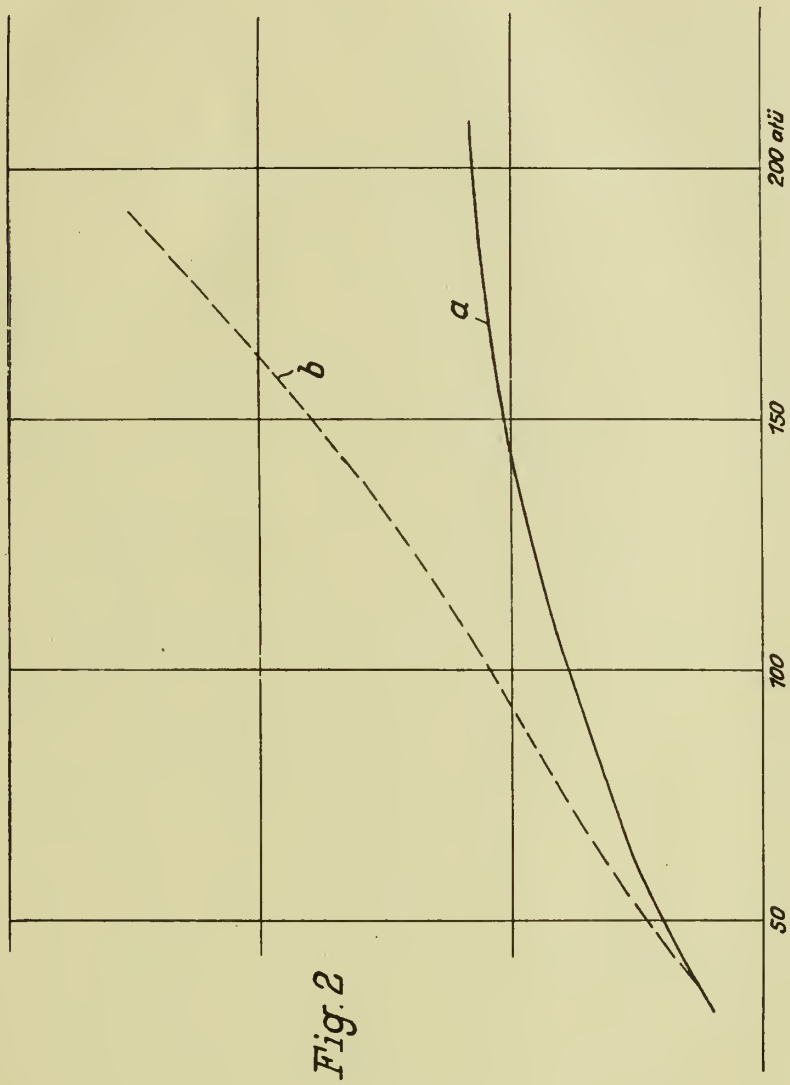

Fig. 2

Inventor:
Paul Gilli
By Wm. J. Hedlund
his Attorney

PUBLISHED

MAY 11, 1943.

BY A. P. C.

P. GILLI

STEAM POWER PLANT WITH HEAT ACCUMULATOR

Filed April 3, 1937

Serial No. 134,706

4 Sheets-Sheet 3

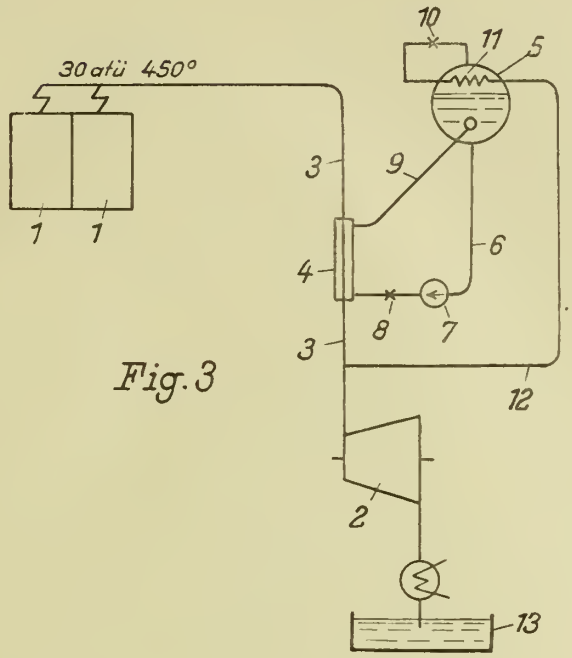

Fig. 3

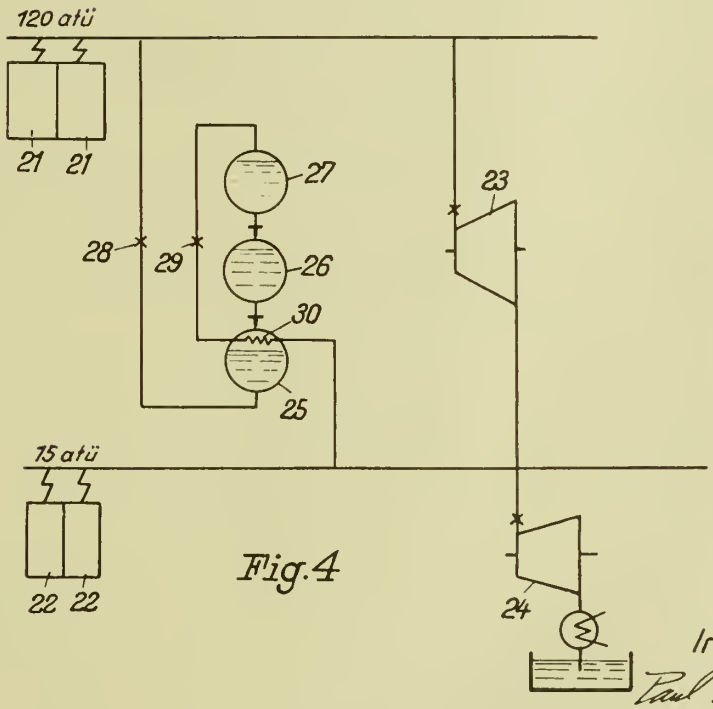

Fig. 4

Inventor:
Paul Gilli
By Wm. J. Wallace
his Attorney

PUBLISHED

MAY 11, 1943.

BY A. P. C.

P. GILLI

STEAM POWER PLANT WITH HEAT ACCUMULATOR

Filed April 3, 1937

Serial No. 134,706

4 Sheets-Sheet 4

Fig. 5

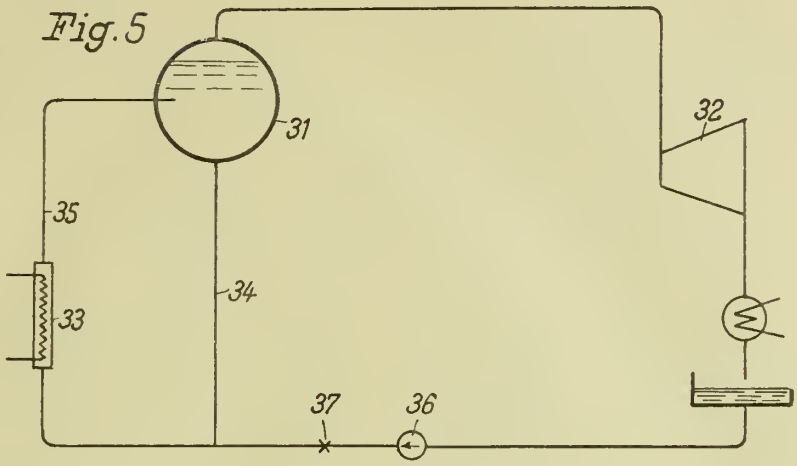

Fig. 6

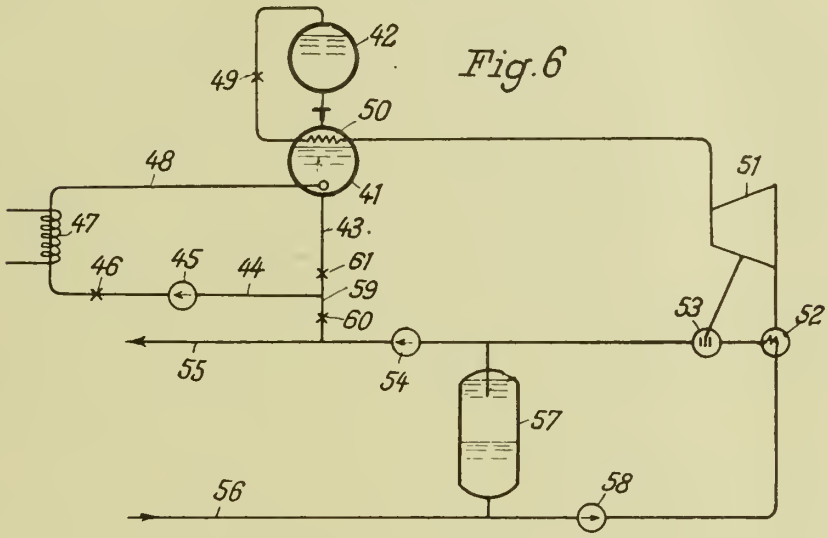

Fig. 7

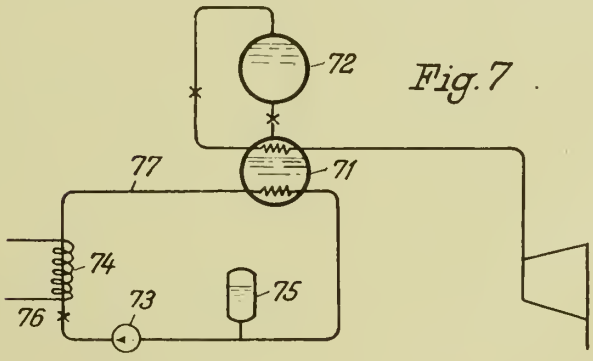

Inventor:
Paul Gilli
By Wm. J. Hedlund
his Attorney

Published May 11, 1943

Serial No. 143,736

ALIEN PROPERTY CUSTODIAN

EMULSIONS OF PHYSIOLOGICALLY ACTIVE COMPOUNDS

Felix Haffner, Tubingen, and Georg Wiegand, Berlin-Grunau, Germany; vested in the Alien Property Custodian

No Drawing. Application filed May 20, 1937

This invention refers to emulsions of physiologically active substances which are to be used for therapeutic purposes. More particularly the invention refers to emulsions of physiologically active compounds of the hydroaromatic series containing oxygen, said emulsions being intended for application by means of the skin.

It is known that numerous compounds of the hydroaromatic series containing oxygen, e. g. hydroaromatic alcohols such as menthol, or hydroaromatic ketones such as camphor, or esters of hydroaromatic alcohols such as bornyl salicylate, are widely used for therapeutic purposes. It also has frequently been tried to apply the said compounds percutaneously. As an example, Spiritus Camphorae, U. S. P., may be mentioned. However, the non-aqueous solutions of physiologically active compounds of the hydroaromatic series containing oxygen, when applied percutaneously, suffer from the disadvantage that the physiologically active substances are badly resorbed by the skin therefrom. Hence, it is an important task to render the above mentioned physiologically active compounds of the hydroaromatic series containing oxygen which per se are insoluble or difficultly soluble in water, soluble or emulsifiable in water.

We are aware that it has been suggested to emulsify the aforementioned substances such as camphor by means of soap. Such camphor emulsions containing soap, however, show considerable disadvantages. Owing to the fact that they are precipitated by calcium and magnesium salts, they are unstable towards the hardening constituents of water. Moreover, soap owing to hydrolysis gives an alkaline reaction which is undesirable for preparations to be applied percutaneously.

This invention then has as an object novel emulsions for percutaneous application of physiologically active compounds of the hydroaromatic series containing oxygen, and methods for their preparation. A further object is emulsions containing the emulsified substances in a particularly highly disperse form. A still further object is emulsions that are stable also towards hard water and can be diluted with water ad lib.

These objects are accomplished by using as emulsifying agents the condensation products of higher molecular split-off products of albumin with higher fatty or resin acids. The said condensation products of the higher molecular split-off products of albumin with higher fatty or resin acids can be used either per se, or as alkali metal salts, or as salts of organic bases such as triethanolamine.

The invention also contemplates emulsions comprising, in addition to the aforementioned physiologically active compounds of the hydroaromatic series containing oxygen, still other physiologically active substances such as salicylic acid or esters of salicyclic acid.

In addition to the condensation products of higher molecular split-off products of albumin with higher fatty or resin acids, said condensation products acting as emulsifying agents, the emulsions according to this invention also may contain substances such as alcohols or sulfonated oils, said substances acting as solubilizing agents for the hydroaromatic compounds containing oxygen which are insoluble or difficultly soluble in water.

By adding small amounts of substances showing an acid or alkaline reaction, the pH of the emulsions according to the invention can be controlled. The emulsions in accordance with this invention are stable and useful for percutaneous application within rather wide limits, viz. between pH=4 and pH=11.

Owing to the fact that the emulsions according to the invention can be diluted with water to any extent, they can be used very advantageously, e. g., as medicinal bath preparations. While the preparation of medicinal baths containing menthol or camphor hitherto has been difficult, the said baths can now readily be obtained by means of the present invention.

Other valuable specific uses for the emulsions according to the invention are embrocations, liniments, salves, and ointments. When employed for these purposes, the emulsions are blended with the customary salve constituents.

The following examples, in which the parts are by weight, are intended to illustrate the invention; and are not to be construed as limiting the scope thereof.

A menthol emulsion to be used as a bath preparation can be produced in the following manner:

Example I

50 g menthol, at a temperature of 50°–60° C, are mixed with 100 gr of a 50% aqueous solution of the potassium salt of a condensation product of lysalbinic acid with talloil fatty acid chloride. To the mixture there are added 40 g of ethyl alcohol and 10 g of sodium sulforicinate. A stable, clear, oily liquid will thus be obtained which dissolves in water to form a stable dispersion. 10–50 cc of this mixture are added per plunge-bath.

The preparation of a camphor emulsion to be used as a bath preparation can be illustrated as follows:

Example II

100 g of camphor, U. S. P., are dissolved in 125 g of pine oil and the resulting solution is mixed with 175 g of a 50% aqueous solution of the potassium salt of a condensation product of high molecular split-off products of albumin of the lysabinic and protalbinic acid type with oleic acid chloride, the preparation of the said condensation product being described in Sommer Patent No. 2,015,912, issued October 1, 1935. To the mixture there are added 20 g of sodium sulforicinate when a clear solution is formed which can be mixed with water of any degree of hardness to form as stable dispersion. The solution can be used as a bath preparation.

An emulsion containing methyl salicylate and camphor which is suitable as an embrocation, can be prepared in the following manner:

Example III

To a solution of 60 g of sodium oleyl lysalbinate in 75 g of pine oil there are added successively 7.5 g of camphor, U. S. P., and 15 g of Gaultheria oil (methyl salicylate). A clear, oily liquid will thus be obtained which can be used as an embrocation.

Example IV

An emulsion containing bronyl salicilate which is suitable as an embrocation, is prepared in the same manner as described in the preceding example, the mixture of camphor and Gaultheria oil being replaced by an equal amount by weight of bornyl salicylate.

The preparation of a camphor ointment can be illustrated as follows:

Example V

50 g of camphor being previously dissolved in 100 g of oleyl or cetyl alcohol are emulsified in 100 g of a 50% solution of the triethanolamone salt of a condensation product of a mixture of polypeptides with stearic acid chloride. Upon cooling, there will be obtained an ointment whose consistence may be varied, as desired, by adding water.

FELIX HAFFNER.
GEORG WIEGAND.

Published May 11, 1943

Serial No. 163,602

ALIEN PROPERTY CUSTODIAN

METHOD AND APPARATUS FOR MOLDING PERFORATED ELASTIC MATERIAL

Josef A. Grabec, Bratislava, Czechoslovakia; vested in the Alien Property Custodian

Application filed September 13, 1937

This invention relates to a novel method and apparatus for producing foraminous, elastic sheet material.

More particularly, the present invention is a continuation in part of my copending applications, Serial No. 709,607, filed February 3, 1934, and Serial No. 24,943, filed June 4, 1935, both of which relate to materials that are manufactured according to the present invention.

Rubber, or rubberized materials are used for all manner of garments, but inasmuch as my new materials, although well suited for general uses, are particularly adapted to corsets and girdles, I shall, for the sake of brevity, refer to such garments as corseting materials.

Previously, rubber corseting materials have been made by punching apertures either in a sheet of rubber or in a sheet of combined fabric and rubber. The products have not been satisfactory for punched sheet rubber tears easily and the relatively few holes in the sheet have been wholly insufficient to permit transpiration from the body. Consequently, rubber corseting materials have been hot, uncomfortable and frequently irritate the skin.

In contradistinction to these perforated or punctured materials, my improved material possesses an open, regular gauze-like structure. It is light, strong and open textured, permits free transpiration and is well suited for use in bathing suits or corsets.

It is the primary aim and object of the present invention to devise a method and apparatus for obtaining a composite sheet material, composed of an elastic material, such as rubber, and of a backing material, such as distensible textile fabric, which requires no adhesive, which is of light weight, well ventilated, and permits transpiration, and which has good distensibility in any direction.

It is a more particular object of the present invention to devise a method and apparatus for molding sheets of an elastic material, such as rubber, and distensible textile fabric, into a composite material in which the two materials are intimately united and in which substantially all of the elastic material has been molded into a new form which not only gives a maximum distensibility to the composite material with the least amount of elastic material, but also provides for effective ventilation and complete transpiration wherever worn.

It is another particular object of the present invention to devise a method and apparatus for molding the elastic stock material of the composite material into such a form that the composite material is particularly suited for holding stitches when sewn.

It is another object of the present invention to devise a method and apparatus for molding elastic sheet material, such as rubber, into a new form in which it is given excellent distensibility, is well ventilated, and is very light in weight.

Before explaining in detail the present invention it is to be understood that the invention is not limited in its application to the details of construction and arrangement of parts illustrated in the accompanying drawings, since the invention is capable of other embodiments and of being practiced or carried out in various ways. Also it is to be understood that the phraseology or terminology employed herein is for the purpose of description and not of limitation, and it is not intended to limit the invention claimed herein beyond the requirements of the prior art.

In said drawings:

Fig. 1 is a side elevation of a machine in which materials may be produced according to the present method.

Fig. 2 is a longitudinal section of the machine, taken substantially along the line 2—2 of Fig. 1.

Fig. 3 is an enlarged, fragmentary section of the two supply materials which are to be molded into a composite material in the present machine.

Fig. 4 is a cross-section of the machine illustrated in Figs. 1 and 2, and of other structure which may be used in conjunction with said machine.

Fig. 5 is an enlarged, fragmentary section of three supply materials which may be molded into a composite material in the present machine.

Fig. 6 is a fragmentary view of an element of the machine, to wit, a "pin" roll.

Fig. 7 is a fragmentary view, partly in section, of a modified construction of said "pin" roll.

Fig. 8 is an enlarged, fragmentary perspective view, partly in section, of one form which the teeth of the "pin" roll in Fig. 6 may assume.

Fig. 9 is an enlarged, fragmentary perspective view, partly in section, of the modified "pin" roll in Fig. 7.

Figs. 10 and 11 are enlarged, fragmentary views of the modified "pin" roll in Fig. 7, indicating more particularly several of a great number of variations in the disposition and dimensions of the teeth of said "pin" roll.

Figs. 12 to 17, inclusive, are enlarged, fragmentary perspective views, partly in section, of certain forms which the teeth of the "pin" roll may assume.

Figs. 18 and 19 are greatly enlarged, fragmentary sections of the cooperating molding structure of the machine which includes the "pin" roll. More particularly, these figures disclose different shapes of the teeth of the "pin" roll.

Fig. 20 is an enlarged, fragmentary plan view of one form of composite material that may be produced in the present machine.

Figs. 21 and 22 are fragmentary sections on the lines 21—21 and 22—22, respectively, of Fig. 20.

Fig. 23 is a greatly enlarged, fragmentary section of cooperating structure of the machine for molding only elastic material without any backing material such as fabric.

Fig. 24 is an enlarged, fragmentary section through material produced by the cooperating structure shown in Fig. 23.

Fig. 25 is an enlarged, fragmentary section through the same material as shown in Fig. 25 which is, however, backed with fabric.

Fig. 26 is a fragmentary section through a modified construction of one of the elements of the present machine, to wit, a "counter" roll which cooperates with the "pin" roll.

Fig. 27 is a fragmentary plan view of one element of a modified form of mold for producing the same material as in the machine disclosed in Figs. 1 and 2.

Fig. 28 is a section taken substantially along the line 28—28 of Fig. 27, showing also the other element of said modified mold in section.

Figs. 29 and 30 are charts which graphically illustrate two examples of temperature and plasticity conditions of the rubber stock of the material prevailing shortly before, during and immediately after the molding process. These charts show also the degree of vulcanization of the rubber stock in relation to its temperature and plasticity conditions.

In accordance with the present invention, a layer or ply of uncured rubber stock, which may be superposed upon a layer of distensible textile fabric, is molded into a perforated pattern by two cooperating pressure-mold members, one of which includes a multiplicity of perforating elements and the other of which provides a surface of slightly yieldable material in the indentations of which the tips of said perforating elements become seated. In order to mold the uncured rubber ply into a perforated pattern, and also firmly unite the same with a layer of textile fabric if so desired, the rubber ply is heated until it reaches a moldable or pliable stage. The heated rubber ply is then molded under pressure between the bite or in the cavity of said mold members. If the rubber sheet is to have a backing material of textile fabric, the same is superposed on said rubber sheet whereby some rubber will also be molded into meshes of the textile fabric and establish a firm bond between the two materials. The cooperating pressure-mold members may take the form of either cooperating dies or of two profiled rolls. The material obtained by the pressure mold in either form has a geometrical system of narrowly spaced rubber ribe with intervening spaces or perforations which may have a fabric backing, if desired. The perforating elements of the mold members which are of pyramidal or modified pyramidal shape do no damage to the threads of the fabric backing but merely spread them apart or momentarily force them into the slightly resilient indentations in the surface of one of the mold members. The molded material is then vulcanized so that it will thereafter permanently retain its form.

A preferred embodiment of my machine, adapted for continuous production is illustrated in Figs. 1 and 2.

General construction of machine

The machine is mounted on any suitable base 31 and comprises a main frame which may consist of a number of suitably joined structural steel shapes. More particularly, suitably supported, spaced upright 32 and 34, joined at the top by a removable tie bar 36, provide two opposite, vertical guides for three pairs of bearing blocks 38, 40 and 42 which rotatably support rolls 44, 46 and 48 respectively. These rolls 44, 46 and 48 are provided with annular shoulders 50, 52 and 54, respectively which engage the adjacent bearing blocks 38, 40 and 42 respectively, to prevent the axial movement of said rolls.

Mounted in any suitable manner on one of the channel irons 56 of the supporting frame of the machine are several spaced bearing brackets 58 which rotatably support a shaft 60, provided with two spaced worms 62. The worms 62 are in permanent mesh with worm gears 64, mounted on spaced vertical spindles 66 which are threaded at 68 and cooperate with internally threaded sleeves 70, guided for vertical movement in cross bars 72 which are secured in any suitable manner to the uprights 32, 34. Also mounted on the spindles 66 are spaced collars 74 which straddle the opposite flanges 76 of several channel irons 78 of the supporting frame of the machine. Consequently, rotation of the worm gears 64 results in rotation of the spindles 66 but not in any axial movement thereof. The sleeves 70 are provided with heads 80 which are received in recesses 82 of the bearing blocks 38 and retained therein by ring members 84. The heads 80 of the sleeves 70 are preferably square or of other suitable shape so that said sleeves will not turn when the spindles 66 are rotated. One end of the worm-carrying shaft 60 is provided with a wheel 61 wherewith to mainipulate the lowermost or "counter" roll 44 toward and away from the middle roll 46, as can be readily understood.

The middle or "pin" roll 46 has a fixed disposition inasmuch as its bearing blocks 40 are bolted or otherwise secured to the uprights 32, 34.

The uppermost roll 48 is supported in a manner similar to the counter roll 44 and is covered at 280 with a relatively soft and yieldable material such as soft rubber. More particularly, the bearing blocks 42 receive the preferably square heads 88 of two sleeves 90 which are internally threaded at 92 to receive threaded spindles 94 on which are mounted worm gears 98, bearing with their hubs 100 against brackets 102, bolted or otherwise secured to the tie bar 36. The sleeves 90 are guided for vertical movement in the tie bar 36. Also mounted on the spindles 94 are collars 106 which are in engagement with the brackets 102 and, together with the hubs 100 of the worm gears 98, prevent axial movement of said spindles 94. Permanently meshing with the worm gears 98 are worms 108 which are provided on a shaft 110, journalled in spaced bearing brackets 112 which are mounted on the tie bar 36. Mounted on one end of the shaft 110 is a wheel 114 for manipulating the uppermost roll 48 toward and away from the pin roll 46.

The middle roll 46 is provided with an extension 116 which has mounted thereon a comparatively small spur gear 118 and a large worm gear

120, the latter being in permanent mesh with a worm 122 on the slow shaft 124 of any conventional reduction gearing 126, the fast shaft of said reduction gearing is coupled in any convenient manner to the shaft of an electric motor 128, suitably mounted on the machine base 31. Any other drive may, of course, be used for the middle roll 46.

The rolls 44, 46 and 48 carry identical gears 130, 132 and 134, respectively, which are keyed or otherwise secured to said rolls at 136. These gears 130, 132 and 134 are preferably of the "herringbone" type to obviate any relative motion therebetween, and are adapted to drive the rolls 44 and 48 from the pin roll 46 whenever the former are in such proximity to the roll 46 that their gears 130, 134, come to mesh with the gear 132.

The rolls 44, 46 and 48 are centrally recessed at 138, 140 and 142, respectively, to form steam chambers which are closed at their open ends by stuffing boxes 144 through which extend steam delivery pipes 146, having inlets 148 which are in communication with manually operable valves (not shown) for the admission of steam to said pipes from any convenient source. A rod 147 extends through the rolls 44, 46 and 48 which counteracts any tendency of the steam pipes 146 to turn with the stuffing boxes 144 when the rolls 44, 46 and 48 rotate.

It will be observed in Fig. 2 that the steam pipes 146 extend nearly to the ends 150 of the steam chambers in the rolls 44, 46 and 48 so that steam discharged from the pipes flows throughout the greater length of the steam chambers in the rolls before escaping through the outlets 152 and from thence to a waste line (not shown). Of course, any medium other than steam may be used for heating the rolls 44, 46 and 48.

Bolted or otherwise secured at 154 to two of the uprights 32, 34 of the machine frame are spaced bearing brackets 156 which rotatably support at 158 a core 160, preferably in the manner shown in Fig. 1 to facilitate removal of said core. Wound on this core is a supply 162 of material, consisting of two superposed separate layers or plies 164 of rubber and 166 of distensible textile fabric. A string or cord 168, secured with one end at 170 to one of the uprights 32, 34 and carrying a comparatively light weight 172 at its other end, may be passed over the core 160 to exert a sufficiently large braking force on the supply roll 162 in order to prevent the same from freely rotating. Evidently, any other well known construction may be used in braking the supply roll 162.

The same uprights 32, 34 which carry the bearing brackets 156 are provided with guides 174 in which are mounted two spaced, vertically adjustable frames 176, providing vertical guides 178 for lower and upper bearing blocks 180 and 186, respectively. The lower bearing blocks 180, which normally rest by gravity on the bottom surfaces 184 of the guides 178, rotatably support a roll 182. The upper guide blocks 186 rotatably support another roll 188 which normally rests by gravity on the lower roll 182, but may be pressed against the latter by means of compression springs 190 which are interposed between the bearing blocks 186 and yokes 192, slidable in the guides 178 of the frames 176. The rolls 182, 188 are preferably covered with a resilient, yieldable material, such as soft rubber. Set screws 194, received by cross bars 196 of the frames 176, bear against the yokes 192 and are provided with handles 198 for changing the compression of the springs 190 at will.

The lower roll 182 carries a gear 210 which is in permanent mesh with the earlier described spur gear 118 on the pin roll 46. This roll is, therefore, rotated in clockwise direction as viewed in Fig. 1, whenever the pin roll is rotated in its normal direction, indicated by the arrow 208 in the same figure. The upper roll 188 is freely rotatable and rotates merely by virtue of its frictional engagement with the finished material as it leaves the machine. For reasons to be explained hereafter, the ratio between the gears 118 and 210 is such that the peripheral speed of the roll 182 is somewhat greater than that of the pin roll 46. The rolls 182 and 188 will hereafter be referred to as "pull-off" rolls.

Also mounted in any suitable manner on the uprights 32, 34 are two spaced bearing brackets 200 which rotatably support at 202 a core 204, preferably in a manner similar to that illustrated in Fig. 1 to facilitate the removal of said core. Wound on the core 204 is a supply of a somewhat distensible fabric 206 which may be used in the machine as will be hereafter explained. A similar braking device as the tensioned string 168 on the material supply roll 162 may be applied to the roll 206 to prevent free rotation of the same.

While the machine illustrated in Figs. 1, 2 and 4 shows a vertical disposition of the rolls 44, 46 and 48, it is to be understood that the same could be arranged in any other convenient manner, for instance, horizontally. Vertically disposed rolls such as shown in Figs. 1, 2 and 4 have, however, the advantages that foreign matter cannot drop between the rolls and that the operator of the machine may readily see the material pass between the various rolls and quickly observe any faults in their cooperation due to any cause whatever.

Alternative constructions of pin roll

The pin roll 46 may be a steel roll 220 having the perforation-forming elements or teeth 224 machined in its periphery (Fig. 6). In this event, the steel roll 220 is preferably grooved spirally in a lathe to obtain the peripherally extending cavities 222 between the teeth 224, and is also grooved longitudinally to obtain the longitudinally extending cavities 226 between the teeth 224. The spiral and longitudinal machining of the steel blank 220 is also indicated in Fig. 6 by a few straight lines 227 and 229, respectively. Machining of the steel roll 220 as aforesaid produces orderly arranged teeth 224 which are square or at least rectangular in section along planes curved concentrically to the periphery of the roll. Subsequent operations with a file, profile cutter or any other convenient tool may serve to round the flanks of the teeth substantially as illustrated in Figs. 12 to 15, inclusive, or to provide various tapered shoulders 230 in the flanks of the teeth as illustrated in Figs. 13 to 15, inclusive. The bottoms of the peripherally and longitudinally extending tooth cavities may be rounded during the spiral and longitudinal machining of the steel roll 220, or they may be rounded subsequently to assume any desired curvature. By making the spiral and longitudinal grooves in the steel roll 220 of different depth, it is obvious that the tooth cavities peripherally and longitudinally of said roll will be of correspondingly different depth as shown in Fig. 8. The different depth of these tooth cavities causes intersecting rubber ribs to have different heights.

In so machining a steel roll, it is possible to obtain a very great number of teeth per square inch of the periphery of the roll.

If a considerably greater number of teeth per square inch of the periphery of the roll is desired, it is preferable to use the modified pin roll in Fig. 7. This pin roll comprises steel laminations **228**, which are spaced from each other by interposed spacers **230** and stacked on a steel core **232**. The core **232** is preferably provided with a shoulder **234** against which the laminations **228** and interposed spacers **230** are pressed by any suitable means such as the nuts **235**, for instance.

Prior to the assembly of the laminations **228** with the spacers **230** and the steel core **232**, said laminations are preferably stacked side by side and their peripheries machined to obtain teeth **233** of any of the profiles shown in Figs. 9 and 12 to 15 inclusive, if viewed in one direction, to wit, longitudinally of the stacked laminations.

It is also possible to mold intersecting rubber ribs of different height, simply by radially spacing the bottoms of the machined tooth cavities in the laminations from the periphery of the interposed spacers.

The advantages of a laminated pin roll are that the laminations may, for example, be twisted relative to each other to any desired extent so that the teeth of one peripheral row project into the cavities between the teeth of an adjacent peripheral row if viewed longitudinally of the roll as illustrated inFig.10. Also, certain peripheral rows of teeth may without special cost be spaced at closer intervals than other peripheral rows of teeth, or the teeth of certain rows may be made smaller than the teeth of other rows, all as indicated in Fig. 11. Consequently, the laminated pin roll has the advantage that irregular perforation patterns can be readily obtained without great cost. Also, if one or more of the perforating teeth of a laminated roll become excessively worn or even broken it is a simple matter to replace some laminations and use the same pin roll again.

It is to be understood that the alternative constructions of the pin roll are by no means limited to the described modes of machining either a blank steel roll or laminations, nor to the few illustrated possibilities of obtaining different perforation patterns with laminations, nor to the few illustrated forms of the teeth of either alternative construction of the pin roll. Obviously, shapes and profiles of the teeth other than those illustrated in the drawings may be found advantageous in certain cases.

Construction of counter roll

The counter roll **44** (Figs. 1 and 2) has a peripheral element of softer material than the material of the teeth of the pin roll and must even be somewhat elastic to assure uniform seating of said teeth on said counter roll while the machine is in operation. For reasons which will appear obvious hereafter, the counter roll must also be able to transmit heat from its steam chamber **138** to its periphery. The steel core **240** of the counter roll **44** may, therefore, be covered with rubber **241** of relatively high durometer hardness or any other suitable material such as paper, artificial resins, synthetic rubber, pressed wool or rags, or any of these materials combined with fabric or even tin or lead. The cover **241** is preferably confined between an annular shoulder **242** of the steel core **240** and a threaded or shrunk collar **244** thereon. Consequently, if the cover material becomes softened when heated, it cannot spread beyond the ends of the core **240** but may expand radially only. Since substantially accurate register of the pin roll and the counter roll is always maintained, the tips **250** of the teeth of the pin roll work into the cover **241** of the counter roll, forming small indentations **251** therein. Continuous realignment between the same teeth and the same indentations makes it imperative that the ratio between the gears **130** and **132** be an integer and that the diameters of the rolls **44**, **46** be inversely proportional to the ratio of their gears **130** and **132**, respectively. Also, micrometric differences in the height of the teeth of the pin roll create micrometric differences in the depth of the corresponding indentations in the counter roll so that the load transmitted by each tooth to the counter roll, is the same and uneven wear of these teeth is effectively prevented.

The counter roll **44** may in some instances require a surface temperature of 120° C. or more. At such a temperature, a cover material of hard rubber may become softened and, although the counter roll will continue to perform satisfactorily, the hard rubber cover **241** may loosen from its steel core **240**. Consequently, the counter roll shown in Fig. 26 is preferred when high temperatures are required.

This counter roll consists of a steel core **260** and paper laminations **262** which are packed against an annular shoulder **264** of said core **260** by nuts **266** or any other suitable means. Inasmuch as paper conducts heat very poorly, it is obvious that the width A (Fig. 26) of the paper laminations **262** should be kept as small as possible, yet permit a tight packing of the laminations on the core. Such a paper covered roll works well at temperature ranges above those practicable for rubber covered rolls.

Inspection device

The finished material **165** may be passed over an inspection device **283** (Fig. 4) as it leaves the machine. This inspection device may comprise any suitable frame **287** on which is mounted a box-like structure **288**, having at its top a transparent plate **289**, such as glass, and housing a light socket **290** with suitable electrical connections and a lamp **292** in said socket for illuminating the composite material **282** from below as it passes over said inspection device. An operator may thus discern the quality of the perforations in the rubber stock of the finished material. The use of this inspection device is naturally a matter of choice.

Vulcanizing box

The finished material may also be passed through a vulcanizing box **284** (Fig. 4) as it leaves the machine, and thereafter guided to a wind-up roll **285** over a guide roll **286**. The vulcanizing box **284** may comprise any suitable frame **294** which carries a box-like structure **296**, having horizontally aligned inlet and outlet openings **298** and **300**, respectively, through which the finished material passes. These openings may be lined with pieces **302** of mohair between which the finished material may pass without becoming damaged.

While passing through the vulcanizing box, the composite material rests on an endless conveyor or belt **304** which passes over suitably mounted guide rolls **306**, **308** and **310** and over combined guide and tensioning rolls **312**. One of the guide

rolls, either 306 or 310, is driven in any suitable manner (not shown), however, preferably so that the endless conveyor moves at the same rate at which the finished material leaves the machine and is wound on the roll 285. The wind-up roll 285 may be driven in any suitable manner (not shown).

Any suitable heating means may be provided in the box-like structure 296. In the present instance, there is shown a steam coil 314, having an inlet 316 and an outlet 318. Steam from any suitable source (not shown) may be admitted to said steam coil 314, preferably under the control of a manually operable valve (not shown).

Mode of operation of machine

Before starting the operation of the machine, it is well to admit steam to the rolls 44 and 46 until the same have predetermined surface temperatures. Thereafter, the surface temperatures of the rolls are kept constant by regulating the steam admission. Next, the machine is started whereupon the counter roll 44 being preferably slightly withdrawn from the pin roll when the machine is at rest, is brought into re-engagement with the pin roll 46, while material from the supply roll 162 is at the same time held between the bite of both rolls 44 and 46. This supply material consists in the present case of the superposed layers 164 and 166 of rubber and distensible textile fabric, respectively, and is so fed between the rolls 44, 46 that the rubber layer 164 is next to the pin roll. As best shown in Fig. 1, the material 164, 166 passes from the supply roll 162 to the counter roll 44, then partly around the periphery of the latter until it meets the pin roll 46 on which it remains for some time, and is finally drawn from said pin roll by the pull-off rolls 182, 188.

The supply material 164, 166 is heated by the counter roll 44 to such an extent that the rubber ply 164 is plasticized when said supply material reaches the bite of the rolls 44, 46 wherein the plastic rubber becomes molded and thereby also firmly bound to the fabric layer 166 in a manner to be described in detail hereafter. The material, which is now in composite form, is then either cooled or further heated by the pin roll 46 while traveling with the same. Since it requires some force to withdraw the composite material from its engagement with the pins of the roll, the lower pull-off roll 182 (Fig. 1) is driven at a greater peripheral speed than the pin roll 46. The pull distends the material slightly and frees it from the pins. By urging pull-off roll 188 against the lower roll 182 under the variable compression of the springs 190, the operator may easily regulate the pull on the composite material 165 which is exerted by the rolls 182, 188. In this way the composite material may be drawn from the pin roll 46 within a safe angular range.

Heating of rolls

The surface temperatures of the rolls 44 and 46 are regulated in two principal ways, depending on whether the rubber contents of the composite material 165 is to be vulcanized on the pin roll 46 or whether the same is to be vulcanized later, for instance in the vulcanizing box 284 (Fig. 4).

Fig. 29 shows several curves which represent the temperature, plasticity and vulcanization degree of the rubber stock of the material when the same is to be vulcanized on the pin roll. The counter roll 44 heats the rubber stock above the critical plasticity until its temperature reaches *d*. The rubber stock is in contact with both rolls 44, 46 between the points *d*, *e* and *b*, *c* of the temperature and plasticity curves, respectively. Here, the flowing and molding of the rubber takes place. The rubber stock is finally heated by the pin roll which has a much higher surface temperature than the counter roll as is evident from the course of the temperature curve in Fig. 29. The term "critical plasticity" as used herein and in the appended claims denotes that point in the plasticity curve at which the rubber stock can be removed from the pin roll without incurring plastic deformation. Removal of the composite material may, therefore, take place anywhere between the lines *g* and *h* since the plasticity of the rubber stock is now below the critical plasticity *a'*. Complete vulcanization of the rubber stock on the pin roll is unnecessary. The remaining degree of cure (*g* to *h*) may be given the stock in the vulcanizing box 284 (Fig. 4).

Fig. 30 shows curves similar to those of Fig. 29. These, however, illustrate the condition where the stock is vulcanized outside of the machine. The counter roll again heats the rubber stock well above the critical plasticity until its temperature reaches *l*. The rubber stock is then in contact with both rolls 44 and 46 between the points *l*, *m* and *i*, *k* of the temperature and plasticity curves, respectively, and the molding process takes place then. The rubber stock is finally cooled by the pin roll which has a considerably lower surface temperature than the counter roll as is evidence from the course of the temperature curve in Fig. 30. Removal of the composite material may then take place at the line *n* immediately after the plasticity of the rubber stock is below the critical plasticity *a'*. No appreciable vulcanization of the rubber stock has as yet taken place, and the same is subsequently vulcanized in the box 284 (Fig. 4), for instance.

In order to expedite the cooling of the rubber stock and thereby quickly lower its plasticity below critical so as to expedite the removal of unvulcanized composite material from the pin roll, a cooling medium is introduced into its chamber 140 instead of steam.

If it is desired to cover the rubber material on both sides with fabric, a sheet 281 of fabric from the supply roll 206 is also fed into the machine in the manner illustrated in Fig. 4. The uppermost roll 48 is then lowered and forced into engagement with the pin roll 46 to such an extent that the soft cover 280 of the roll 48 forces the fabric 281 against the botoms of the tooth cavities in the pin roll. Some steam may be admitted to the roll 48 to cause evaporation of any moisture in the fabric 281 before the same reaches the pin roll. The fabric sheet 281 then meets the superposed layers 164 and 166 of the supply material 162 at the bite or "nip" of the rolls 44 and 46, and some of the plasticized rubber will also be forced into the meshes of the second fabric layer 281 when the molding operation takes place. The composite material 282 is withdrawn from the pin roll 46 by the pull-off rolls 182, 188. This composite material 282 may be vulcanized on the pin roll or in the vulcanizing box 284 (Fig. 4).

Cooperating dies

Instead of using the described rolls for a continuous process of forming composite material, the cooperating dies 340 and 342 (Figs. 28 and 28) may be used for smaller articles of a composite material which do not justify the higher cost of

rolls. More particularly, the dies **340** and **342** are provided with dowel pins **344** and registering holes **346**. Provided in the bottom die **342** by any suitable method are a number of perforating teeth **348** which may be of any suitable shape. The top die **340** is provided with a lining **350** which may be of the same material as the cover material **241** of the counter roll **44** and be indented at **252** by the teeth **348** of the die **342**.

A sheet of rubber with or without a superposed layer of fabric is placed in the dies, whereupon the latter are closed under pressure and heat is applied to the sheets through the dies. A molding process takes place then which is the same as that in the rotary rolls. Vulcanization of the molded material can be completed in the dies by the application of heat for a suitable period, or the die can be cooled after the molding process is completed and the material removed therefrom for vulcanization elsewhere.

Molding process

Figs. 18 and 19 illustrate the molding process which the rubber of the supply material undergoes either in the rolls **44**, **46** or in the dies **340**, **342**. It will be observed in the above figures that the highly plastic rubber **164** is forced against the fabric **166** by the flanks of the perforation-molding teeth, resulting in the formation of the intersecting rubber ribs **270** (Figs. 20 to 22). No threads are ever severed or broken, for the plastic rubber grips each thread and as it is being displaced by an intrusive molding tooth, each thread is carried away from the point itself. In addition, the wedging effect of the flank of the adjacent molding teeth causes the rubber not only to flow into and to assume the shape of the cavities between the adjacent teeth, but also the rubber is flowed into the meshes of the fabric to an extent illustrated by the stippled areas **272** in Figs. 18 and 19. Thus the rubber is molded about many threads and is securely bonded to the fabric.

By using the shouldered teeth shown in Figs. 19 and 13 to 15, inclusive, more rubber will be forced into the meshes of the fabric.

If it is desired to give the composite material a pleasing ribbed appearance on its fabric side, the surface portions **280** between adjacent indentations **251** may be rounded (Fig. 19). If a rubber sheet alone is molded, these rounded surface portions **280** will round the adjacent portions of the rubber ribs (Figs. 23 and 24).

Material thus molded may have the texture that is illustrated greatly enlarged in Fig. 20. Figs. 21 and 22 are greatly enlarged sectional views of the perforated material shown in Fig. 20. Now and then a few perforations are continued through the fabric wherever a perforating tooth has spread the meshes of the fabric apart. This is also shown in Figs. 21 and 22.

The teeth **320**, shown in perspective in Figs. 16 and 23, are particularly suited for forming very thin sheet rubber without fabric into a perforated material such as illustrated in Fig. 24. This material comprises very fine, intersecting ribs **322**.

If it is desired to apply a backing material **324** of any kind of fabric to the perforated rubber sheet in Fig. 24, the teeth **326**, shown in Fig. 17, may be used. These teeth **326** may differ from the teeth **320** only by having tips **328** which will pass into the fabric **324** on molding the composite material **330** (Fig. 25). The tapered shoulders **332** of the teeth **326** will force some of the rubber into the meshes of the fabric and thus establish a lasting bond between both materials.

Distensibility of composite material

Knit fabrics have little extensibility in the direction in which the goods are knitted, but possess extensibility in a direction at right angles thereto. However, corsets, girdles and similar articles require a material which is distensible in any direction. By stretching knit fabrics in the direction of their greatest extensibility and then permanently combining rubber therewith while the fabric is in a stretched condition, the composite material which results is distensible in any direction. This discovery is used to good advantage in the manufacture of the new composite material.

Thus, the fabric material is held stretched in the direction of its greatest extensibility during the molding process. A continuous supply of textile fabric, which can be stretched lengthwise as it is fed into the machine, is obtained by severing knit textile fabrics across their width, i. e., in the direction of their greatest extensibility and then sewing together the severed fabric pieces with their non-severed sides in end to end relation.

Rubber material

In order to obtain a good product of composite materials or of rubber alone, the rubber must be tough and must have considerable distensibility and resistance against tearing. A high grade product is, for instance, obtained by using the following rubber compounds for the rubber ply: 80% pale crepe rubber, 16% zinc oxide, 1% accelerator, 2% sulphur and 1% color. A product of somewhat poorer quality may be made, for instance, with the following rubber compound: 50% crepe rubber, 5% zinc oxide, ¼% stearic acid, 1% color, 40% whiting, 1% accelerator, 1% sulphur and 1¾% softener. These are, of course, only examples of rubber compounds which can be used, and it is to be distinctly understood that any other rubber compounds may be used.

The terms "elastic material," "rubber" or "rubber-like substance," as used herein and in the appended claims, are meant to include any material or composition of matter having the property of elasticity and being capable of conversion from a deformable into a more or less permanently elastic state.

Characteristics of new materials

The textile fabric is firmly attached to a coherent system of molded ribs **270** of suitable breadth and height which are of elastic material, such as rubber. The height and cross-section of the ribs is determined by the desired resistance of the finished or perforated material to distension. Also, if the resistance to distension in two transverse directions is to be different, the intersecting ribs of elastic material will be made of different height or of different cross-section, or both.

While a finished material of any desired perforation pattern may be produced, it is preferable to produce a finished material in which the uncovered area of the textile fabric used is as large as possible, and should preferably amount in all to at least 50% of the entire area of the fabric in order that the composite material may permit transpiration. The elastic ribs of the finished material are on the other hand preferably spaced as closely as possible since thick, widely spaced

webs not only detract from the ventilating properties of the composite or finished material, but also reduce its suitability for holding stitches when sewn.

If the composite material is used for wear on the human body with the rubber side turned toward the skin, the contact area between the skin and the composite material is very small, due to the rounded peaks **271** (Figs. 21 and 22) of the rubber ribs **270** as can be readily understood. Consequently, very few pores will be covered by rubber, and the greater area of the skin will be well ventilated so that the wearer will experience a welcome cooling effect wherever the material is worn if air has free access to said material.

The elimination of any excess rubber in the composite material by the molding of a comparatively thin ply of rubber into intersecting ribs with intervening rectangular or square perforations not only represents a saving in rubber stock, but results also in a composite material of light weight which has great elasticity in the directions of the intersecting rubber ribs.

JOSEF A. GRABEC.

PUBLISHED

MAY 11, 1943.

BY A. P. C.

J. A. GRABEC

METHOD AND APPARATUS FOR MOLDING PERFORATED ELASTIC MATERIAL

Filed Sept. 13, 1937

Serial No. 163,602

7 Sheets-Sheet 1

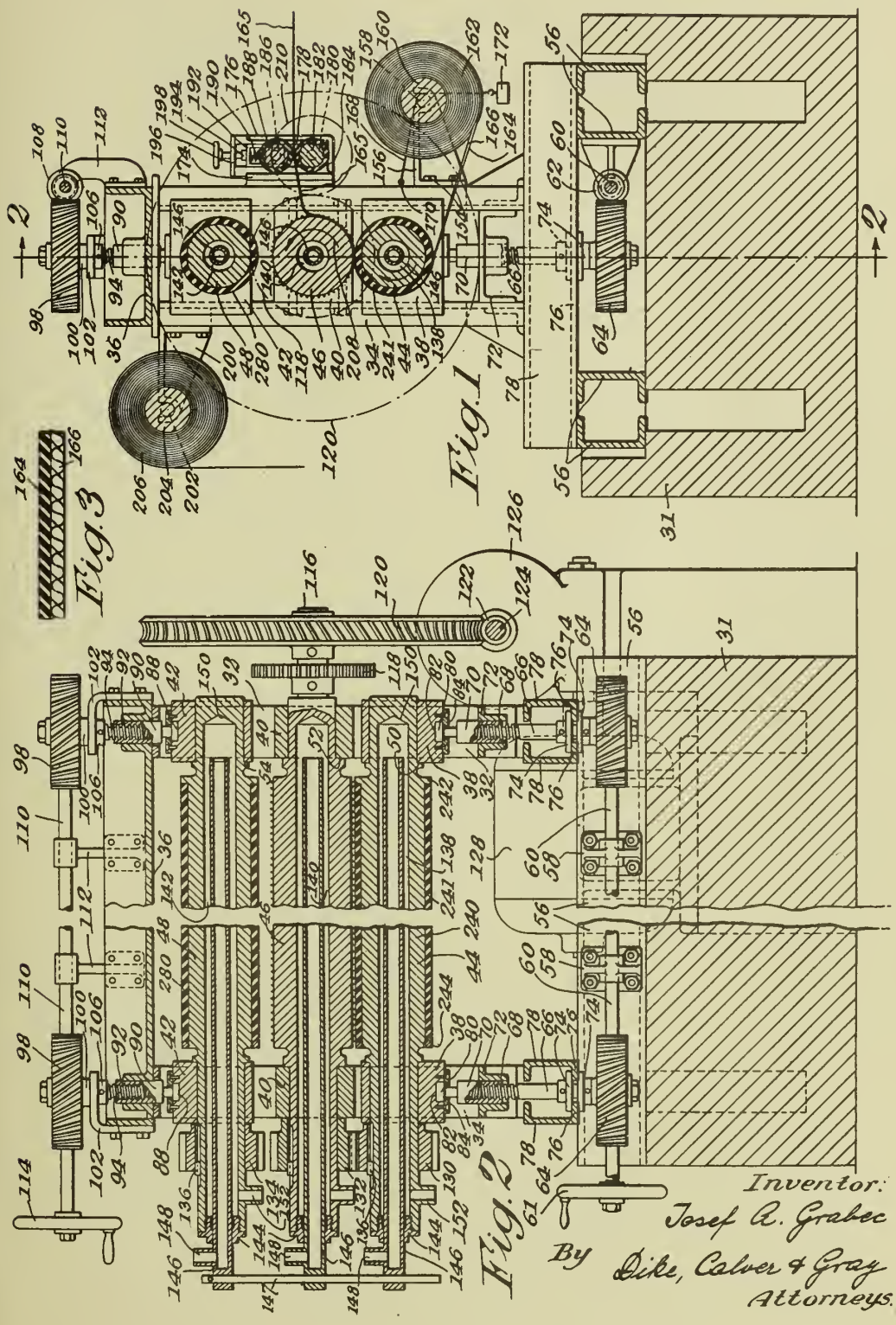

Inventor:
Josef A. Grabec
By Dike, Calver & Gray
Attorneys.

PUBLISHED

MAY 11, 1943.

BY A. P. C.

J. A. GRABEC

METHOD AND APPARATUS FOR MOLDING PERFORATED ELASTIC MATERIAL

Filed Sept. 13, 1937

Serial No. 163,602

7 Sheets-Sheet 2

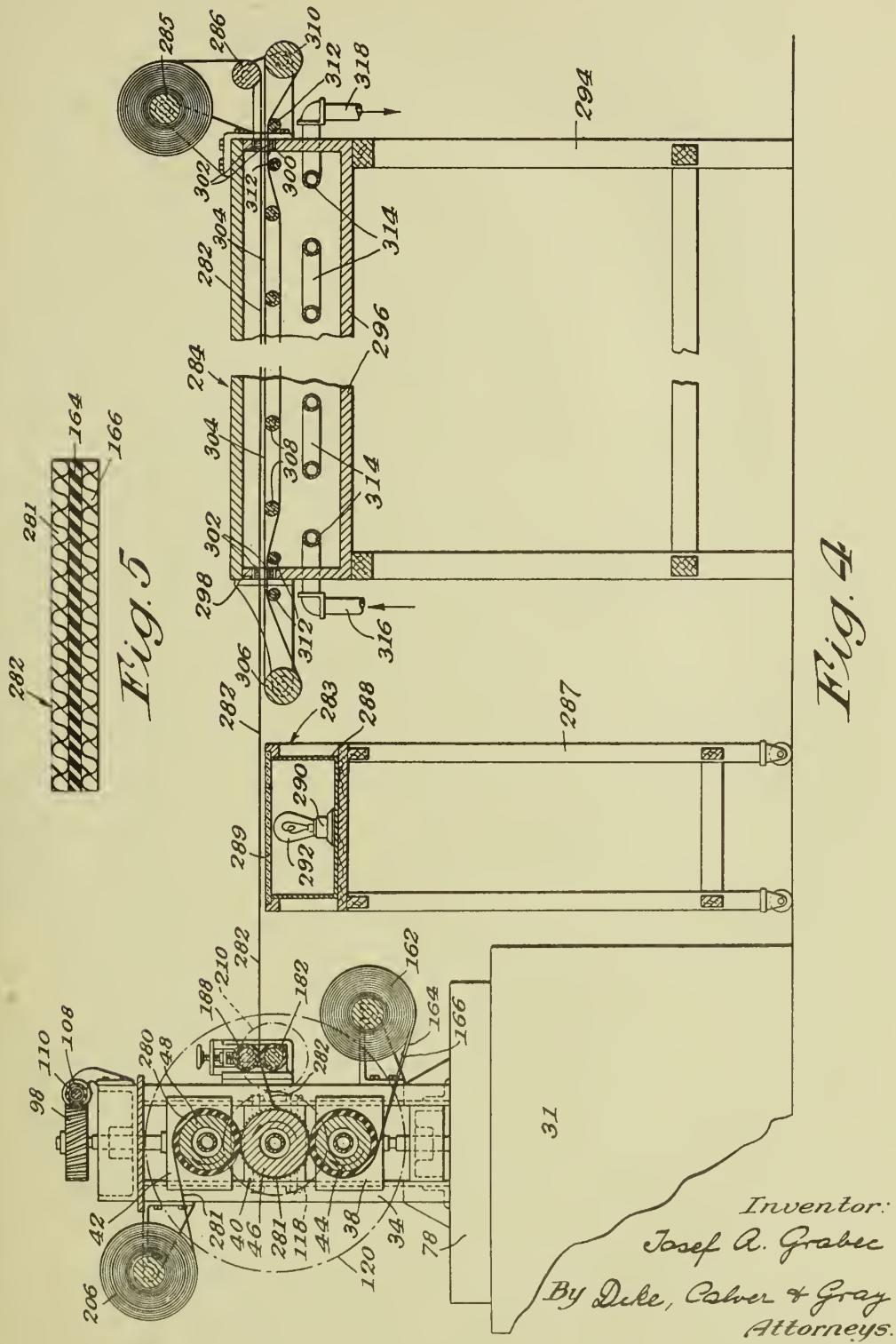

PUBLISHED

MAY 11, 1943.

BY A. P. C.

J. A. GRABEC
METHOD AND APPARATUS FOR MOLDING
PERFORATED ELASTIC MATERIAL
Filed Sept. 13, 1937

Serial No.
163,602

7 Sheets-Sheet 3

Fig. 6

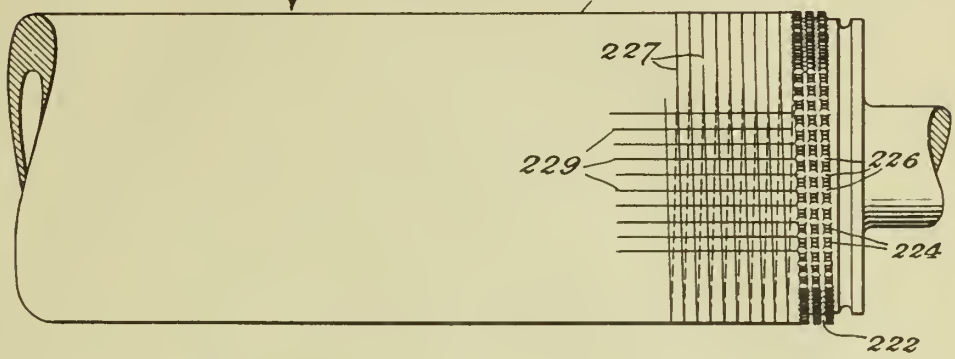

Fig. 8

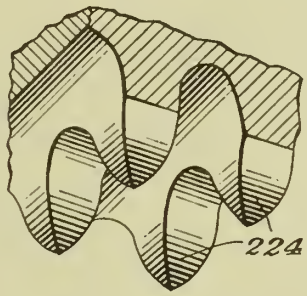

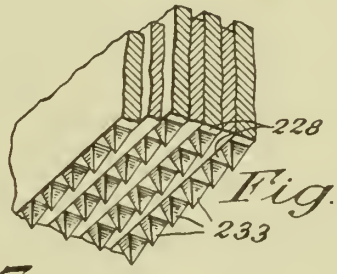

Fig. 9

Fig. 7

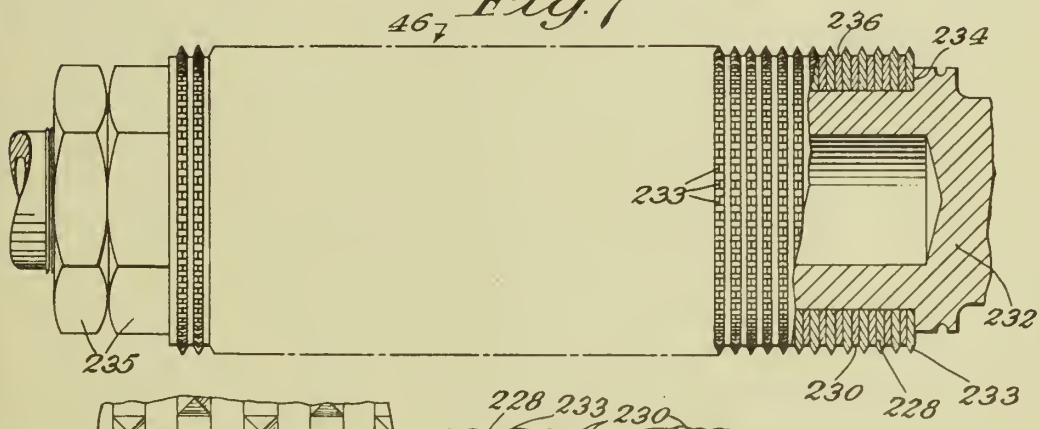

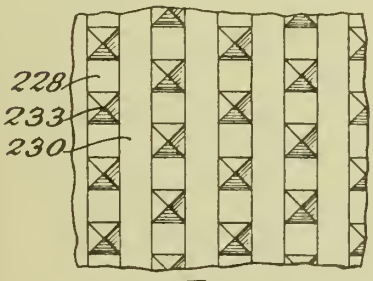

Fig. 10

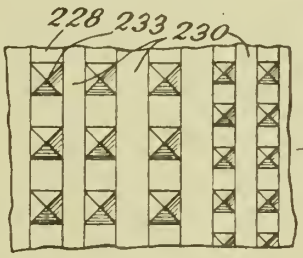

Fig. 11

Inventor:
Josef A. Grabec
By Dike, Calver & Gray
Attorneys.

PUBLISHED
MAY 11, 1943.
BY A. P. C.

J. A. GRABEC
METHOD AND APPARATUS FOR MOLDING
PERFORATED ELASTIC MATERIAL
Filed Sept. 13, 1937

Serial No.
163,602
7 Sheets-Sheet 4

Fig. 12

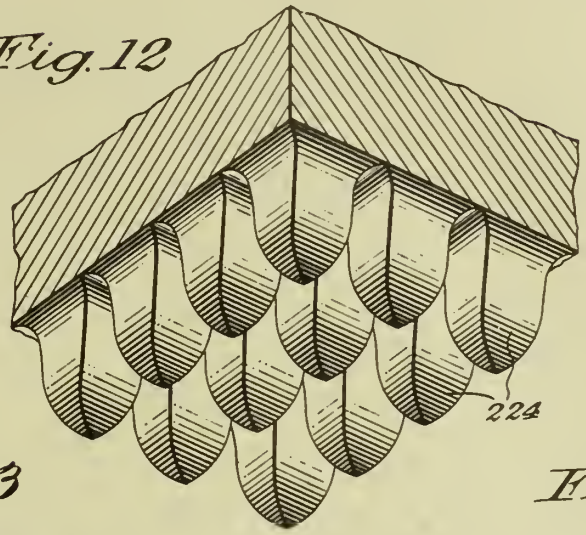

Fig. 13

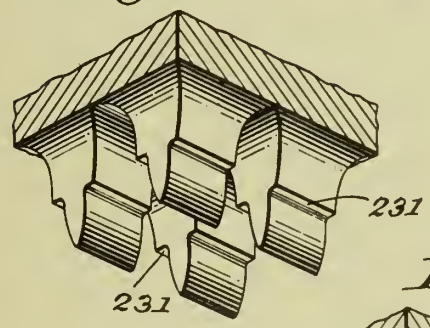

Fig. 14

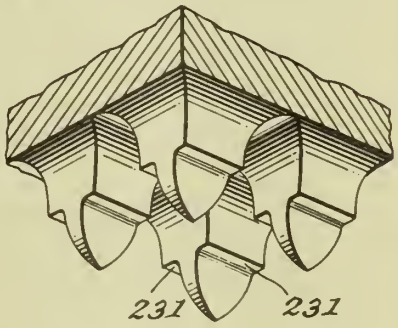

Fig. 15

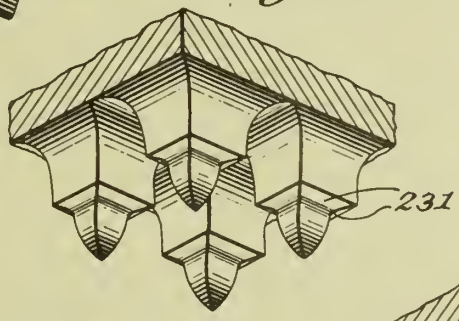

Fig. 16

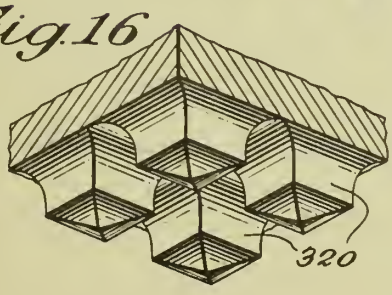

Fig. 17

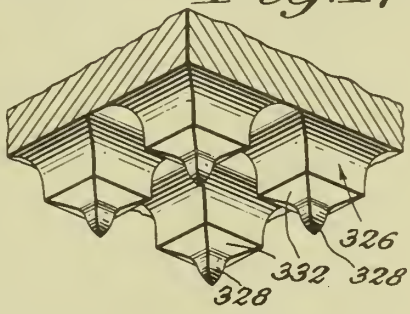

Inventor:
Josef A. Grabec
By Dike, Calver & Gray
Attorneys.

PUBLISHED

MAY 11, 1943.

BY A. P. C.

J. A. GRABEC

METHOD AND APPARATUS FOR MOLDING PERFORATED ELASTIC MATERIAL

Filed Sept. 13, 1937

Serial No. 163,602

7 Sheets-Sheet 5

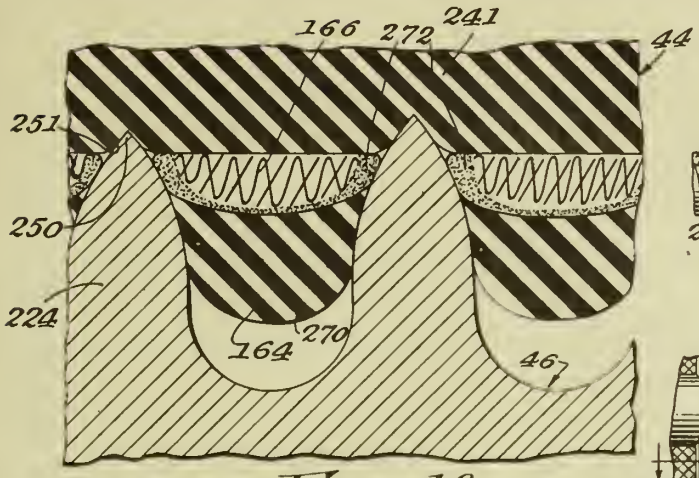

Fig. 18

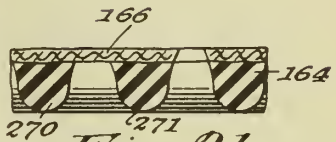

Fig. 21

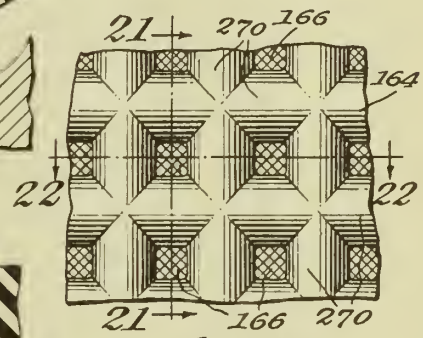

Fig. 20

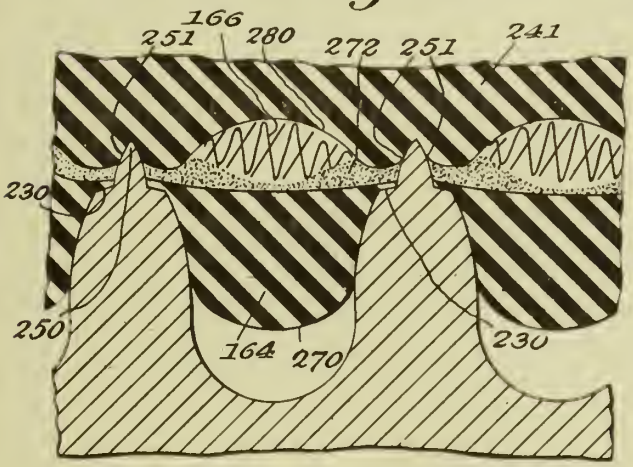

Fig. 19

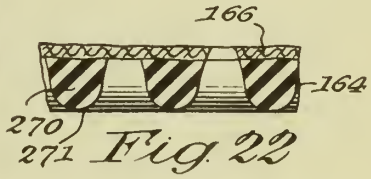

Fig. 22

Fig. 25

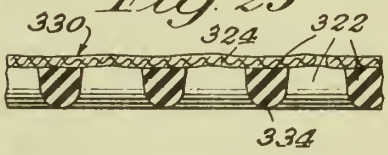

Fig. 24

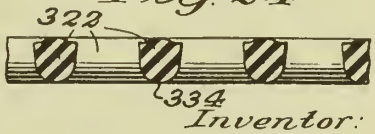

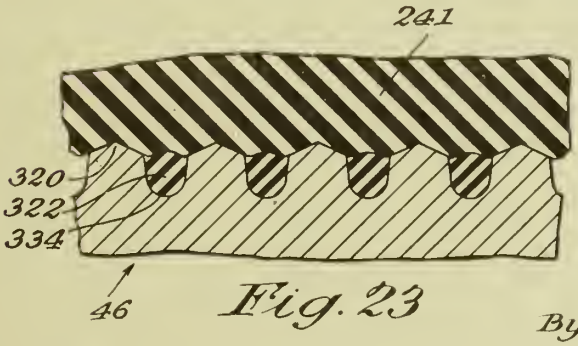

Fig. 23

Inventor:
Josef A. Grabec

By Dike, Calver & Gray
Attorneys.

PUBLISHED

MAY 11, 1943.

BY A. P. C.

J. A. GRABEC

METHOD AND APPARATUS FOR MOLDING PERFORATED ELASTIC MATERIAL

Filed Sept. 13, 1937

Serial No. 163,602

7 Sheets-Sheet 6

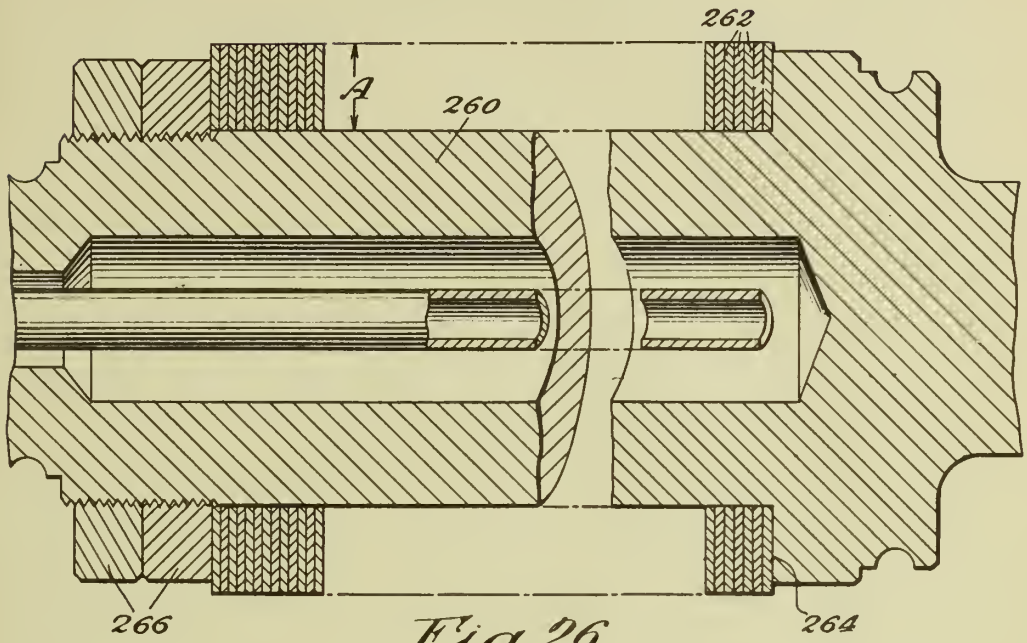

Fig. 26

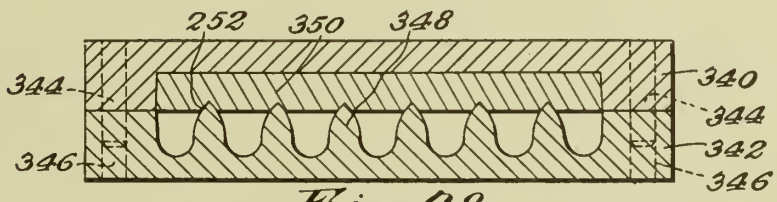

Fig. 28

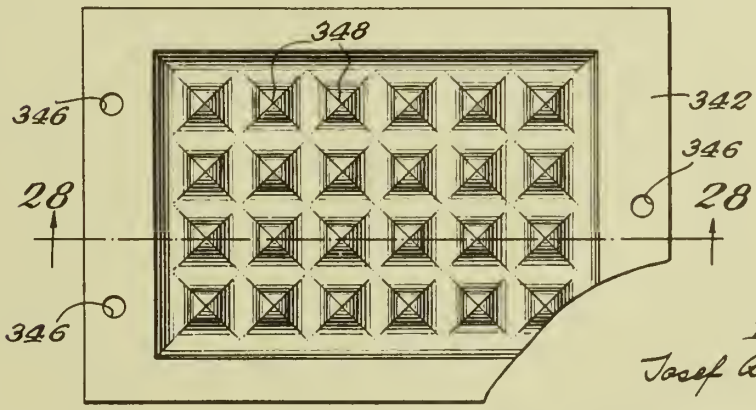

Inventor.
Josef A. Grabec

Fig. 27

By Dike, Calver & Gray
Attorneys.

PUBLISHED
MAY 11, 1943.
BY A. P. C.

J. A. GRABEC
METHOD AND APPARATUS FOR MOLDING
PERFORATED ELASTIC MATERIAL
Filed Sept. 13, 1937

Serial No.
163,602
7 Sheets-Sheet 7

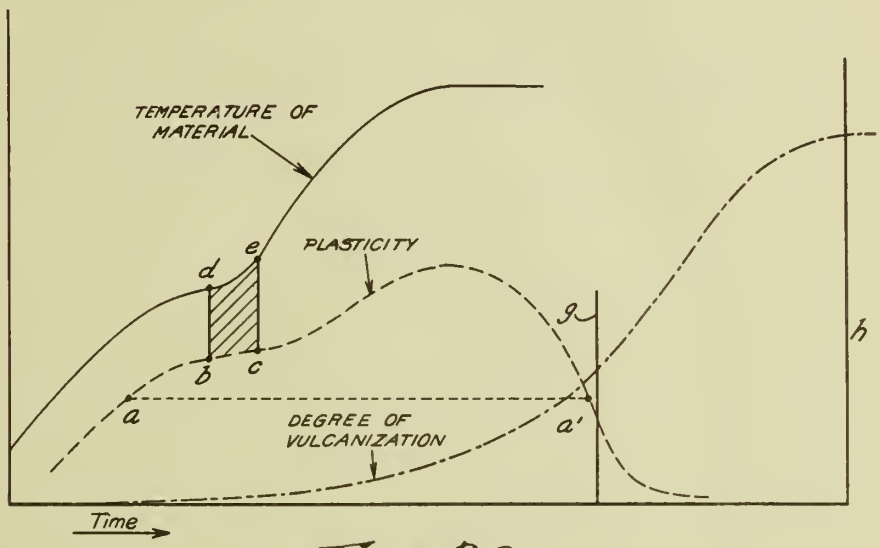

Fig. 29

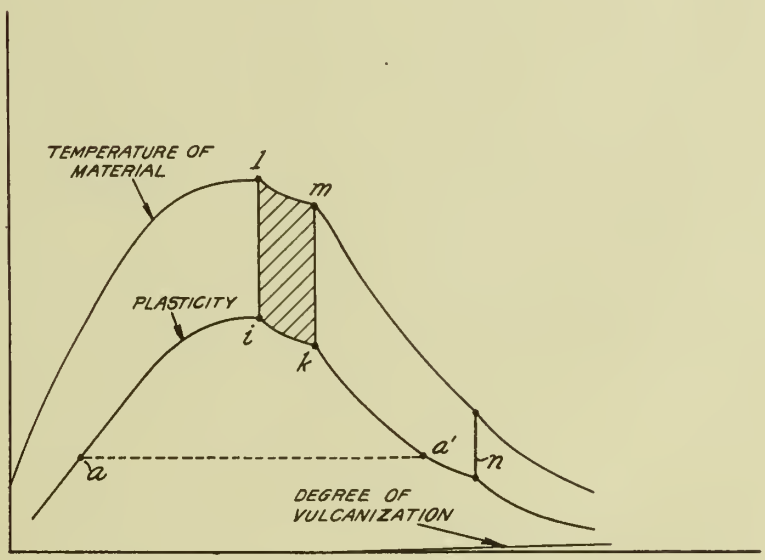

Fig. 30

Inventor:
Josef A. Grabec
By Dike, Calver & Gray
Attorneys.

Published May 11, 1943

Serial No. 174,078

ALIEN PROPERTY CUSTODIAN

METHOD OF INCREASING THE QUALITY OF STRUCTURES OF ALUMINUM ALLOY SUCH AS GIRDERS FOR AIRSHIPS AND THE LIKE

Ludwig Dürr, Friedrichshafen, Bodensee, Germany; vested in the Alien Property Custodian

No Drawing. Application filed November 11, 1937

My invention relates to a method of increasing the quality of structures of aluminum alloy and has special reference to structures of this kind as they are made use of in aeronautics, for example girders for airships and other similar structures.

Aluminum alloys containing to a certain percentage copper and magnesium have been found to be susceptible to considerable improvement in quality by heat treatment and following cooling down. The quality increases especially during a certain period during which the heat-treated alloy is at rest. When such improved alloy is again subjected to a lower heat treatment of 100 to 200 degrees centigrade for a longer or shorter period a further increase in quality is obtainable. In such manner it is possible to get plates, tubes, channels and other structural elements of a considerably improved strength, breaking as well as tensile.

But when assembling a structure from such improved elements the product does not show an adequate improvement in quality. If the parts are welded together there are created zones of lower strength because of the partial heating to which they are subjected and which causes reduction in strength. If the elements are joined by riveting the rivets constitute the weak points as it is not possible to hit them in the hardened state.

My invention improves these conditions and makes possible that the assembled structure acquires an improved strength, if so desired. For this purpose the elements are assembled by welding or riveting before undergoing the second heat treatment; and when the structure is completed it is subjected in its entirety to the heat treatment. This new way according to my invention has the great advantage that the joining of the elements is simpler and easier as they are not yet of the harder quality which they attain later. Furthermore, all parts of the structure are subjected to the heat treatment, the portions of lower strength because of welding as well as the rivets, if the elements were riveted together. Thus a uniform state of quality is attained all over the entire structure.

If it is desired to have the structure provided with an outer cover of lacquer which is burnt into the surface it is advantageous to combine the burning in of such lacquer with the last heat treatment for improvement of the metal qualities thus simplifying and rendering cheaper the entire method of production.

I do not want to be limited to the details described as variations may be possible without departing from the scope of my invention.

LUDWIG DÜRR.

Published May 11, 1943

Serial No. 176,066

ALIEN PROPERTY CUSTODIAN

METHOD OF AND APPARATUS FOR CONVERTING COLLOIDAL MASSES INTO DRIED POWDERED FORM

Walter Tell, Berlin-Friedenau, Germany; vested in the Alien Property Custodian

Application filed November 23, 1937

The valuable properties of sludge and humous masses such as, for example, sea or inland mud, fossil deposits (clay loam, bauxite, kaolin and the like), sewage of large towns and mixtures of these types of sludges with other substances, such as seaweed, peaty soil, peat, freshwater limestone, for agricultural purposes as fertilisers, and for the subsequent industrial treatment of the elements contained therein, are known. Although these sludges exist in large quantities as waste products, as obstacles obstructing traffic at the mouths of rivers, etc., and can be used as raw materials in potteries, as building materials and for other purposes, they were hardly, if at all, utilised hitherto on account of their great capacity for retaining water and their occurrence together with large quantities of water. The drying of these sludges often presents insurmountable difficulties which make the exploitation thereof unremunerative. It has been proposed to dry the sludges in lumpy form or in the form of aqueous solution in rotating, strongly heated drums or on conveyor bands travelling in heated chambers. In this way, however, valuable substances are evaporated from the sludges, their humous substances are burned and the soil bacteria as well as the microorganisms are killed, thereby making the final product valueless. The evaporation by means of artificially produced heat energy rendered this method of working up too costly. Attempts have recently been made to break up the masses by the bursting effect of freezing and to expose the increased surfaces of these subdivided masses to an aeration process such as occurs naturally each year and is assisted by the farmer when he loosens cultivated land by ploughing. While in this way, the chemical and biological properties of the sludges are not altered, the treatment by freezing, especially during the hot season of the year, when natural frost is not available, is even more costly than drying by heat treatment. The favourable utilisation of natural frost is, however, only possible in the coldest winter weather.

It is also known to place loam bricks on roofed structures and to dry them for subsequent baking by natural draught. In this case, however, gradual drying is a preliminary condition, since rapid drying results in fissures or cracks being formed, which are increased by the baking and thus a large number of faulty bricks are obtained. For this reason, the bricks are partly re-arranged on the frames so as to bring about a uniform slow drying.

In the drying of sludges for agricultural and industrial purposes, however, the formation of fissures is actually desired, since thereby the surfaces to be dried are increased in the same way as under the bursting effect of frost.

Most sludges also contain decayed matter, so that they can be subjected to a putrefying and fermenting process in order to assist the process of loosening and disintegration.

The object of the invention is to provide a method of working up sludges in which natural energies are used to the full extent for drying and disintegrating the sludges into a serviceable form. As the cheapest method of drying, natural draught is obtained by producing a constant difference in temperature between different parts of the drying chambers, for example, between the floor and roof. In this connection, it is useful to erect the drying sheds or houses in an east-to-west direction and to provide them with a roof which is inclined downwardly from north to south. If the method is employed in hot summer temperatures or if the installation is subdivided into freezing and aerating chambers, all the walls of the sheds or chambers, or the partitions between the freezing and aerating chambers, are made of heat-insulating material. The roofs are suitably made of dark, heat-absorbing material, so that the heat of the sun's rays is absorbed as much as possible and the natural draught is increased by the great temperature difference between the floor and the roof.

An embodiment of apparatus for carrying into effect the method according to the invention is shown diagrammatically in the accompanying drawing, wherein:

Fig. 1 shows a drying chamber with side walls and roof.

Fig. 2 shows a series of adjacent drying chambers with passages therebetween.

In Fig. 1, *a* is the treating chamber with floor *b*, side walls c and sloping roof *d*. The side walls c are preferably constructed of heat-insulating material, whereas the roof *d* may consist of black heat-absorbing material, such as, for example, wood with composition roofing. Doors may be provided in the side walls on opposite sides, through which may be introduced the supports (not shown) with the supporting frames for the sludges together with the latter, or the sludges alone, and may again be removed after treatment. Inlet openings *e* are formed in the side walls close to the floor and outlet openings *f* close to the roof, in order to produce a natural draught. In the example shown, the processing

chamber *a* is subdivided into two adjacent chambers.

In Fig. 2, a plurality of chambers *a* are shown in a row with intermediate passages *g*. The passages *g* are covered with roofs *h* of heat-insulating or heat-reflecting material. The roofs *h* may be foldable or placed upon the roofs *d*, in which case supporting strips *i* for the roofs *h* are provided. The chambers *a* are so arranged that they extend from east to west, whilst the roofs *d* and *h* are inclined from north to south. Conveniently, the roofs *h* may also be inclined from south to north, in order to make the heat screening more effective. The removable or foldable roofs *h* rest upon the laths or props. The individual chambers *a* may, for example, measure 4 m.×4 m. and have a height of 4 m. or 4.75 m.

The chambers may also consist of one or more compartments in which the masses to be treated rest on frames. The thickness of the layers is to be adapted to the type of sludge and to the conditions obtaining at the time. With lumpy sludges, the supports are constructed as gratings or sieve or filter surfaces from which the water can drain off. This frame with the gratings or sieves can be made in any known manner and have been omitted from the drawing for clearness. The parts of the roof above the passages arranged between the drying chambers conveniently consist of heat-insulating or heat-reflecting material, so that the lowest possible temperature prevails in the passages and on the floor, whilst the remaining parts of the roof, by storing the sun's heat, allow the highest possible temperature to occur underneath the roof and above the frame. A constant natural draught is produced by the difference in temperature.

When the supporting frames have been introduced into the drying chambers with the sludge masses to be treated, and if outside the temperature is at a summer level, all the walls of the chambers are closed, all draught openings at the floor are completely closed and the draught openings at the roof are for the greater part closed, so that only a slight interchange of air between the outer air and the interior of the chambers is possible. After a short time, due to the heat of the sun, the putrid sludge masses begin to ferment, so that the temperatures in the drying chambers begin to rise. By means of a thermometer which can be read from outside, a watch is kept to see that the temperature, due to fermentation, does not rise beyond a certain nondetrimental temperature. The upper temperature limit will usually lie at about plus 50° C. If the inner temperature rises above this limit, it is advisable first to open further draught flaps underneath the roof, and if this is not sufficient, to open a few draught flaps at the floor. If, after about 24–36 hours, a thorough warming of the sludge masses has taken place due to fermentation, all the upper and lower draught flaps are opened. The heat-storing drying chambers, in conjunction with the warm sludges permit the formation of a very effective draught which, by sweeping the masses, dries the latter in about 3 to 4 days, so that they become disintegrated. If desired, the disintegrated masses may be subsequently sieved or finely ground. If sun heat is lacking as a natural means of heating the sludges, the fermentation can be initiated by artificially heating the chambers or sludges, or can be accelerated by saturating the air in the chambers with oxygen or by passing electric current through the masses. As soon as the fermentation has been started, the artificial heating can be partially or completely cut off.

If sludges are treated in which a fermentation or putrefaction does not take place or in which the process of fermentation is not desired, the chambers are subjected to the natural draught by opening all the upper and lower air openings immediately the frames have been charged with the mass, and this current of air can be increased, if required, by artificial means. In this drying method, the masses are dried and ready for grinding in about 5 to 6 days.

When the external temperature is cold, as in winter, the treating chambers are frozen through in a natural manner after the frames have been loaded with the sludge, during a period of frost. In sunny, frosty weather, the dark roofs absorb heat; thus cold air is constantly drawn in from outside through the air apertures at the bottom and passes over the mass. If the outer temperature remains at about zero (0° C.), the freezing process can be assisted by supplying cold which has been artificially produced. In this case, the chambers are completely closed and the heat insulating roofs of the passages between the chambers are placed on the roofs of the chambers, so that the artificially produced cold is not counteracted or affected in any way by the heat rays from outside. The passage roof, consisting of heat-insulating or heat-screening material, is conveniently placed on a lath projecting upwards from the roof of the chambers, so that there is a small intermediate space in which the natural air current prevents any storage of the sun's heat in the black roof of the processing chamber.

With this combination process, adapted to the weather conditions obtaining at the time and performed in the chambers which increase the draught flow in every conceivable manner, the treatment of the sludge masses can be effected at any time of the year with the addition of the smallest possible amount of artificial energy. During the treatment, the sludge masses lose their high water content and can be transported over long distances; moreover, they can be applied to the land as fertilizers in an easily distributable form, either alone or mixed with other substances, or they may be applied in their natural composition or mixed with other substances for industrial purposes.

In the ceramic industry, the working up of sea mud by drying and baking wet molded articles in the known manner is impossible, because mud has even greater water absorption powers than the clay commonly used and, in addition, contains considerable quantities of humous substances. The formation of cracks during the drying and baking, which occurs with clay, takes place to an even greater extent with mud and results in practicaly all of the baked articles becoming rejects. By utilizing the mud masses prepared according to the invention, containing only small quantities of water, for further treatment by molding in presses, the humous constituents of the mud with their gelatine properties acting like glue, no shrinkage in drying and no formation of cracks can occur on account of the almost complete dryness of the molded articles. The danger of cracks being formed and of articles becoming rejects in the baking is almost completely obviated when sludge masses prepared according to the invention are used. Since the molded shapes can pass into the oven without the necessity of storage, freezing of the wet

molded articles during their drying period, which otherwise might occur during frost in winter, cannot take place. Moreover, the costs of the plant for drying wet molded articles and loss of time caused by the long drying period, such as are required by the known wet molded articles, are obviated.

It is not only for the further treatment of mud for ceramic products that the method of treatment according to the invention is of considerable importance, but the novel method can also be usefully employed for the treatment of clay or loam before these masses are made into bricks or ceramic products. If necessary, humous waste substances can be added to these raw materials in order to obtain the desired adhesive properties of the material during the subsequent pressing process.

Moreover, the treatment according to the invention can also be employed with the same result on the production of molten masses for casting pipes, linings, hot water tanks, washing devices, machine parts, tools, articles in daily use and the like; acid-proof and alkali-proof coatings for use instead of tinning, galvanizing, chromium plating or the like. The same applies to masses for casting table tops; in road construction for paving stones with permanently rough surfaces by mixing or adding gravel, sand or cinders to the molten mass or in the casting moulds. Since the sludge mass may be colored by the addition of known admixtures and can be polished after it has cooled or solidified, the basic material prepared according to the invention can also be used for the manufacture of ornamental articles. Without the new method of preparation, the large quantities of water present in the basic or raw material had to be evaporated in comparatively large melting plants, so that the production of the molten mass was too costly and unremunerative due to the oversize plants required on account of the high water content and the extended time necessitated by the evaporation of the water. As, for example, fused sea mud has the hardness of corundum and yet is very tough, it is superior to the glasses usually used, so that it has technical advantages when used in industry. Moreover, spun wool of high elasticity and tenacity can be produced economically from the mud prepared and processed according to the invention.

By mixing the sludge prepared according to the invention with other substances, which ensure sufficient tenacity for the bodies moulded from the composition with subsequent baking, numerous other uses are possible for the raw material thus prepared, in the building industry and for the production of articles in daily use.

The employment of colloidal masses for skin treatment and as medicinal baths is known and tested (mud and peat baths or packs). The property of the colloidal substances is such that they are preferably only used in the immediate vicinity of their origin, because the transport of sludge masses over long distances is too troublesome and costly. In contrast, the material prepared according to the invention is easily packed and transported. In its prepared form, the substance is superior to the unprepared substance for the various possibilities of use, for the easily distributable powder obtained by sifting or grinding the prepared mass, mixes more readily with the bath water or is formed more readily into a paste for use as a skin food than the lumpy colloidal substance having a high water content. It is also known that earths of the most diverse composition can be used for curative purposes. For this purpose also the preparation of the substances according to the invention is of importance, not only because it can be transported more easily, but mainly because of the efficacy of the easily distributable powdery substance. Sea mud, for example, contains many agents having an important rejuvenating and invigorating action, due to the presence of salts and fine substances admixed therewith (iodine boron, bromine, rare earths etc.) The health-giving effects of sea-water drinking cures are also obtainable by taking a cure with mud powder from sea mud. Taken in small doses (just a pinch night and morning), it aids digestion, calms the nerves and has absolutely no injurious effects, since disease germs cannot exist on account of the salt-content of the mud. The use of the mud powder for medicinal purposes, is equivalent to the use of "pickled" earth which is dried (cured) in the open.

The novel method of preparation also enables the mud and sludge masses to be used economically in the production of cement. The novel method of preparation permits the useful and economic utilisation of substances which otherwise as waste matter, exerted a damaging influence or had to be removed at considerable expense. At the same time, by means of the novel method, the preparation and further treatment of raw materials already used is made more economic and more profitable than possible hitherto.

The term "powder" as used herein shall be deemed to include granular masses and "colloidal substance" shall include "colloidal masses".

WALTER TELL.

PUBLISHED

MAY 11, 1943.

BY A. P. C.

W. TELL

METHOD OF AND APPARATUS FOR CONVERTING COLLOIDAL MASSES INTO DRIED POWDERED FORM

Filed Nov. 23, 1937

Serial No. 176,066

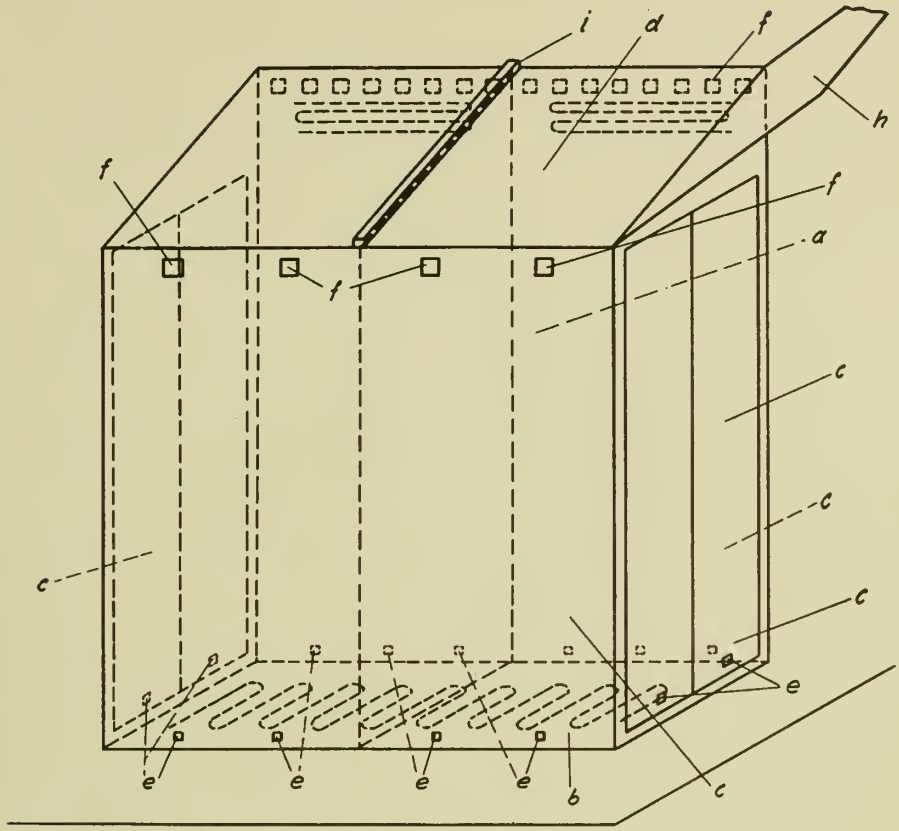

Fig. 1

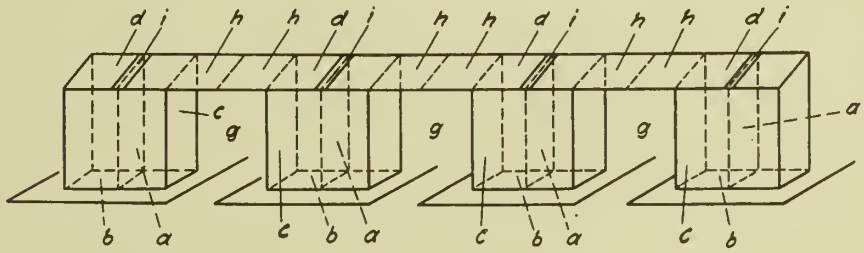

Fig. 2

WALTER TELL,
INVENTOR,
By: Julian J. Wittal
his attorney.

Published May 11, 1943

Serial No. 188,829

ALIEN PROPERTY CUSTODIAN

VEHICLE BODIES

Kurt Schäfer, Berlin-Eichkamp, Germany; vested in the Alien Property Custodian

Application filed February 5, 1938

My invention relates to a vehicle body and a process of manufacturing the same, and more particularly to a body having an outside shell of sheet material.

The primary object of my invention is a body of superior simplicity and rigidity which can be produced at reduced expense by a simple and economical process.

A more specific object of my invention is to compose the outside shell of the body of as few stampings as possible.

Prior to my invention it has been proposed to achieve these and other objects by assembling the body of two stampings each including half of the roof, one side wall and half of the floor. The manufacture of such stampings, however, presents considerable difficulties and requires the use of expensive machinery on account of the considerable depth of the drawing operation. Moreover the different functions which the floor and the other enclosing walls of the body should have in such a construction could not be met.

According to a feature of my invention the outside shell of the body includes a pair of stampings each of which constitutes the body side wall panel and one half of the roof. The two stampings contact with and are connected to each other along the longitudinal central plane of the vehicle, preferably throughout the length thereof.

In order to produce these stampings, they are pressed in a direction approximately bisecting the angle between the side wall and the roof. In this way the depth of the drawing operation is reduced to a degree which results in a simple and economical production.

My invention will be described hereinafter by reference to a preferred embodiment thereof and the features of novelty will be pointed out in the claims.

In the drawings

Fig. 1 is a diagrammatic cross section through a vehicle body embodying my invention, a die being indicated by reference to the cross section thereof.

Fig. 2 is an isometric illustration of an integral stamping forming part of a streamlined vehicle body and

Fig. 3 is an isometric view of the element shown in Fig. 2 viewed from the opposite side thereof.

The vehicle may have a frame or a floor unit of known construction. In the example shown the frame consists of box-like longitudinal side members **1***a*, **1***b* between which may be inserted the floor panels **2** and the cross members (not shown). The upper part of the body consists of two symmetrical stampings **3***a* and **3***b*. Each of these stampings extends from about the lower side edge of the body or a longitudinal line of the side wall across the upper side edge **4***a* and **4***b* to the vertical centre plane **5** of the vehicle. Each of the stampings thus forms the one side wall and half of the roof. Viewed from another aspect, the stampings **4***a*, **4***b* contact with each other at and extend from the central vertical longitudinal plane **5** of the vehicle beyond the adjacent lateral longitudinal edges **4***b* up to the remote longitudinal lateral edges connected to the side members **1***a*, **1***b*.

The stampings **3***a* and **3***b* may extend longitudinally over the entire length of the body. In this event each of the stampings **3***a*, **3***b* may take the form illustrated in Figs. 2 and 3. The stamping shown in these figures comprises an integral shell. This shell has a side wall section provided with two door openings **10** and **11**, a roof section **12** sloping towards the rear of the vehicle as shown at **13** and provided with a rear window opening **14**, a windshield section formed with an opening **15**, a rear fender **16**, a front fender **17** and a hood section **18**. It will be noted that the openings **10**, **11**, **14** and **15** are provided with flanges constituting reinforcing elements and forming frames for the insertion of doors or panes. Since each of the two shells, one of which is shown in Figs. 2 and 3, has an opening **15**, the two shells will in assembled condition form a streamlined body of the type having a two-part windshield. Preferably each section thereof is inclined with regard to both, a longitudinal axis and a transverse axis of the vehicle. Owing to this disposition of the windshield section, the direction indicated by the arrow **7** in which the drawing operation is performed, will extend at an angle to the windshield section. Owing to this feature the drawing operation is greatly facilitated as compared with a design in which the windshield extends at right angles to the central vertical longitudinal plane.

Another reason why a vehicle of the type having a two-part windshield and a two-part rear window is particularly adapted to be manufactured in accordance with my invention, is the fact that in this type of vehicle I may obtain a continuous uninterrupted contact between the two marginal flanges **19** throughout the length of the vehicle since these flanges are not interrupted by the windshield opening and by the rear window opening. In fact, the contacting flanges **19** when welded together will constitute a very effective reinforcing rib extending throughout the entire

length of the vehicle throughbetween the two sections of the windshield and the two sections of the rear window.

Preferably, the hood section **18** is formed integral with the front fender **17** and the side panel. A suitable opening **20** is provided to afford access to the interior of the hood. This opening **20** may be closed by a separate foldable element in a known manner.

If desired however, the body may comprise a plurality of pairs of symmetrical stampings connected to each other in the central longitudinal vertical plane of the vehicle and there may be added one or more stampings of a shape different from that above described. Thus, the pair of symmetrical stampings **3***a* and **3***b* may form side panels and the roof of the passenger compartment only, while an integral stamping extending over the entire width of the vehicle constitutes the windshield frame and is connected to the stampings **3***a* and **3***b*. Door and window openings are cut out of the stampings in the usual way and inside reinforcements added where it is necessary.

The stampings **3***a* and **3***b* may be connected with each other at the centre plane **5** in various ways, for example, by butt-welding, welding together of overlapped edges, through the flanges **19** drawn from the edges of the stampings adjacent to each other or by additional separate connecting pieces.

Instead of making the side wall and one half of the roof out of one stamping, I could make the side wall together with one half of the floor panel out of one piece and insert between the side walls a separate roof.

The formation of the dies is indicated in the drawing which shows the one half of a die **6**, and the direction of drawing by the arrow **7**. As can be seen from the sketch, the direction of drawing and the angle between the one side wall and the part of the roof forming one stamping with said side wall, are nearly identical. This means that, if the direction of drawing is arranged in such way that a comparatively flat stamping is formed, the press operation will not present great difficulties even if the side walls also contain door and window openings and flanges.

While I have described my invention hereinabove with reference to a specific embodiment thereof, I wish it to be understood that my invention is not limited to the details of this embodiment but is capable of many modifications which will occur to anyone skilled in the art. Thus, I may use any desired sheet material such as organic condensation products or the like although I prefer to use sheet metal, more particularly steel. The body formed of the two symmetrical stampings may be sufficiently stiff to be self-supporting. In this event a separate chassis frame may be dispensed with; or the body may be mounted on such a frame, as desired; also the floor unit of the body may constitute the chassis frame.

KURT SCHÄFER.

PUBLISHED
MAY 11, 1943.
BY A. P. C.

K. SCHÄFER
VEHICLE BODIES
Filed Feb. 5, 1938

Serial No.
188,829
2 Sheets-Sheet 1

Fig. 1

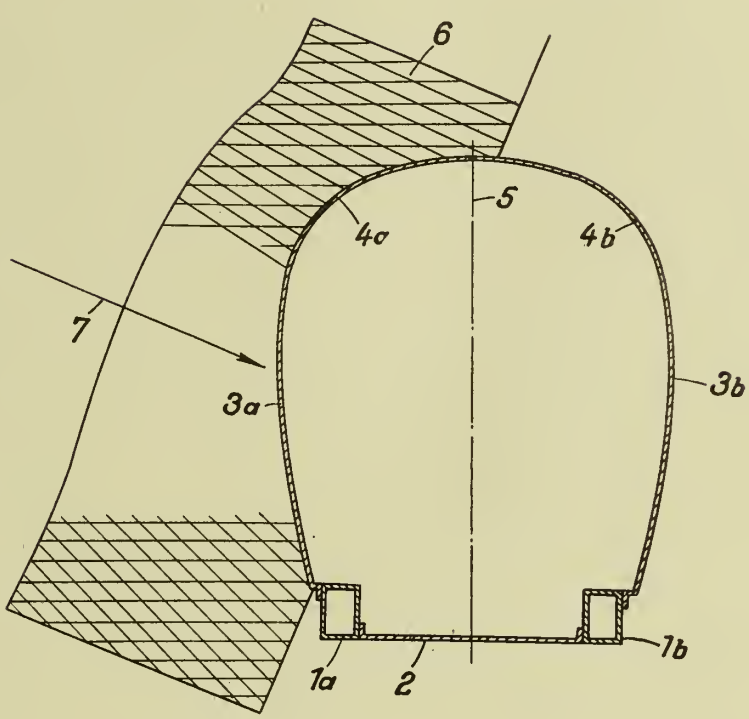

Inventor:
Kurt Schäfer
By John P. Tarbox
Attorney

PUBLISHED
MAY 11, 1943.
BY A. P. C.

K. SCHÄFER
VEHICLE BODIES
Filed Feb. 5, 1938

Serial No.
188,829
2 Sheets-Sheet 2

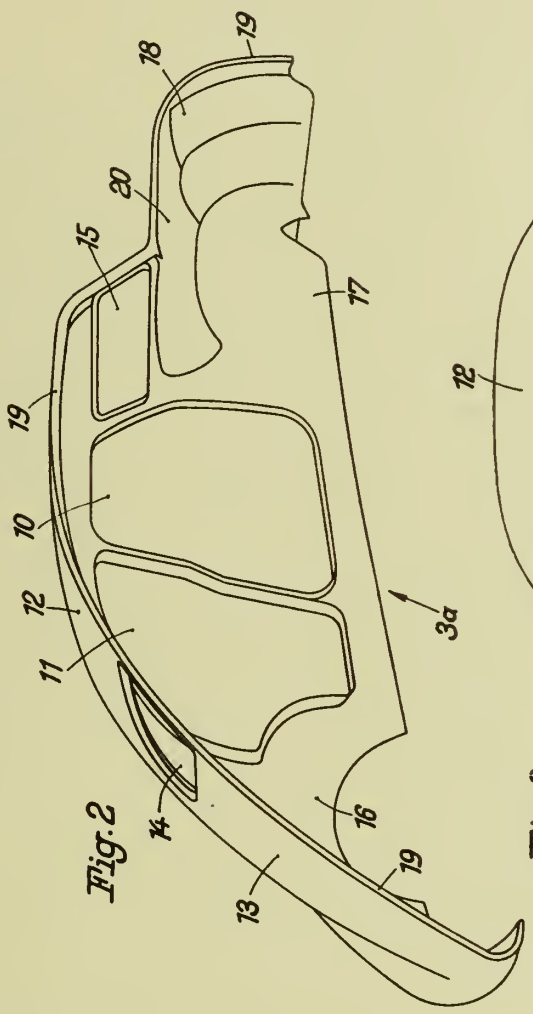

Fig. 2

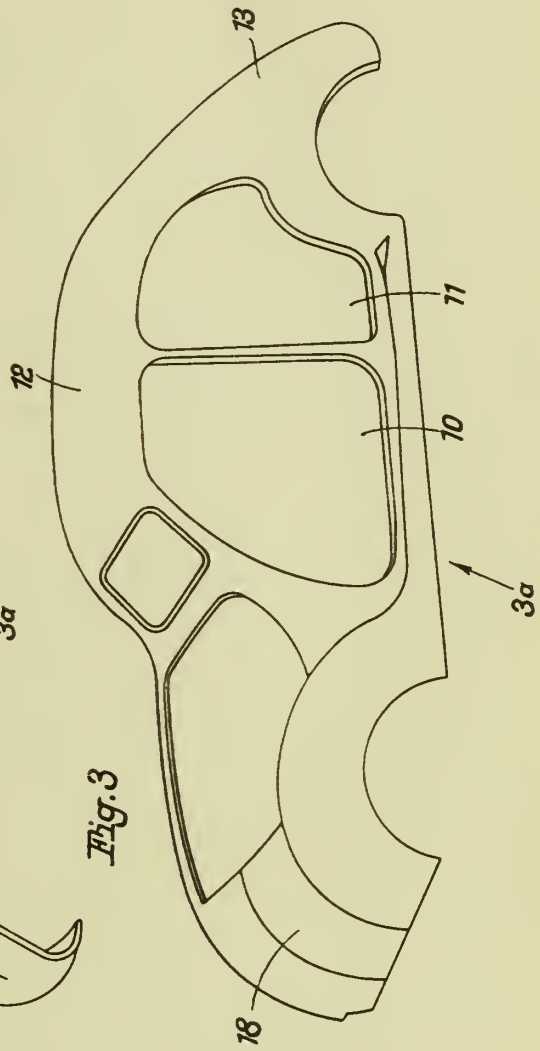

Fig. 3

Inventor:
Kurt Schäfer

By John P. Tarbox
Attorney

Published May 11, 1943

Serial No. 189,394

ALIEN PROPERTY CUSTODIAN

COOLING ARRANGEMENT FOR INTERNAL COMBUSTION ENGINES

Wilhelm Seyerle, Waldenbronn, near Esslingen A/Neckar, Germany; vested in the Alien Property Custodian

Application filed February 8, 1938

This invention relates to a cooling arrangement for internal combustion engines and more particularly, is directed to an improved construction for cooling the cylinders of an internal combustion engine. This application is a division of my co-pending application Serial No. 79,684, filed May 14, 1936.

An object of this invention is the provision of an improved and efficient arrangement for the cooling of an internal combustion engine.

Another object of this invention is the provision of improved cooling means for and in intimate contact with the cylinders of an internal combustion engine.

Still another object of this invention is the cooling of the cylinders of an internal combustion engine by passing a cooling medium longitudinally along and in close heat relationship with the cylinder walls.

A further and more specific object of this invention is the provision of an improved construction for cooling the walls of an engine cylinder wherein the cooling fluid moves transversely about said cylinder at the hottest part thereof and then flows longitudinally along the cylinder walls. Generally speaking, this invention may be defined as comprising the constructions and combinations recited in the annexed claims and illustrated in certain embodiments in the drawings accompanying and forming a part of this application wherein;

Fig. 1 is a longitudinal cross-sectional view of an engine cylinder illustrating a preferred embodiment of my cylinder cooling construction;

Fig. 2 is a transverse cross-sectional view along the line II—II of Fig. 1;

Fig. 3 is a longitudinal cross-sectional view of an engine cylinder showing another form of my construction;

Fig. 4 is a transverse cross-sectional view along the line IV—IV of Fig. 3;

Fig. 5 is a longitudinal cross-sectional view of an engine cylinder illustrating a third arrangement according to my invention;

Fig. 6 is a transverse cross-sectional view along the line VI—VI of Fig. 5;

Fig. 7 is a longitudinal cross-sectional view of an engine cylinder illustrating a further form of my improved cooling arrangement;

Fig. 8 is a transverse cross-sectional view along the line VIII—VIII of Fig. 7;

Fig. 9 is a transverse cross-sectional view through the cylinder head according to my invention;

Fig. 10 is a partial transverse cross-sectional view illustrating a modified form of cooling passage; and

Fig. 11 is a cross-sectional view showing a modified form of cooling ribs.

In the preferred form of my invention as portrayed in Figs. 1 and 2, the cylinder casing **32** of an internal combustion engine is preferably provided with a collecting space **33** to which a cooling medium, for example, water, air, oil, or any other suitable fluid, is adapted to be supplied. Inside of the collecting space **33** there may be positioned a plurality of ribs **34** secured in place by a web **35** preferably cylindrically shaped, which is supported in the cylinder by ledges or bridge members **36**. The ribs **34** are located comparatively close to one another and extend either parallel to the axis of the cylinder or they may form a steep helical line extending along the liner **37**. The liner **37** may be made either in one casting with the casing or manufactured as a separate member and later firmly attached to the casing as by shrinking. The liner **37** together with the cylindrical member **35** and its ribs **34** form a plurality of passages **38** communicating with the collecting space **33** through lower apertures **39**. An upper collecting space **40** constitutes a continuation of the passages **38** and leads the cooling agent through passages **41** into the cylinder head **42**. As clearly illustrated in Fig. 9, the ends of the passages **41** may be defined in the form of a nozzle and enclose a central opening **43** serving as a space for an inlet valve. In accordance with the above construction, the cooling fluid is adapted to first flow into the collecting space **33** through a suitable channel (not shown). From the collecting space **33** it flows through the apertures **39** and upward through the passages **38** into the annular channel **40**. From the channel **40** the cooling medium then flows out through the passages **41** in the cylinder head.

The modified form of construction illustrated in Figs. 3 and 4 differs from that shown in Fig. 1 and 2 only in the fact that here the collars which hold the liner in place as in Figs. 1 and 2, are enlarged to form a surrounding cylindrical wall **44**, thus preventing direct contact of the cooling fluid with the liner. In accordance with the terminology of this art the form of the invention illustrated in Figs. 1 and 2 may be termed the wet liner construction, while that in Figs. 3 and 4 is the dry liner construction. The rest of the arrangement in Figs. 3 and 4 is identified with that shown in Figs. 1 and 2.

In the third form of my invention illustrated

in Figs. 5 and 6, a plurality of transverse ribs **45** are provided in addition to the longitudinal ribs **34**. These transverse ribs are preferably positioned above the longitudinal ribs between the latter and the cylinder head. The ribs **45** form cooling passages **46** surrounding the cylinder liner at its hottest portion and have a damming effect at the inlet side **47** and a diffusion effect at their exit side **48**. A mass of material **49** in the shape of an eddy core is placed in the cooling passage **46** on the exit side to prevent turbulence of the streaming cooling agent, and thereby increasing the efficiency and effect of the cooling fluid. This construction is more fully explained in my said co-pending application Serial No. 79,684 filed May 14, 1936.

Another feature of my modified construction as illustrated in Figs. 5 and 6 is that a portion of the collecting space **33** may be subdivided into a plurality of cooling passages **51** by means of ribs **40**, thereby increasing the contact surface between the cooling fluid and the cylinder parts.

As clearly shown in Fig. 5 the upper annular channel **40** in this form of the invention communicates with a hollow space **52** positioned in front of the ribs **45**, whereas the cooling passages **41** through the cylinder head communicate with the passages **51** formed by the ribs **50**. Therefore, the cooling agent contained in the collecting space **33** flows, on the one hand, through the cooling passages **51** and out through the passages **41**, while on the other hand, it flows from the collecting space **33** through the aperture **39**, the cooling passages **38**, the channel **40**, the hollow space **52** and out through the transverse passages **46** formed by the ribs **45**. If desired, at the upper end of the longitudinal passages **38**, an opening **53** can be provided in the wall **35** so that the pressure of the cooling fluid can be equalized at this point. This opening **53** can also be used to supply cooling fluid which has not been preheated by the ribs **34** by connecting this opening to a separate pipe or conductor (not shown).

The fourth constructional form of my invention illustrated in Figs. 7 and 8 is substantially the same as that shown in Figs. 1 and 3 except for the fact that a separating wall **54** is provided at the exit ends of the cooling passages **38**. This wall dividing the escaping cooling agent into two streams. This arrangement is advantageous for example, if the cooling passages cross one another at the head of the cylinder or extend about the liner in the form of a helical line.

It is to be understood that the nozzle-shaped exit passages **41** may be used in the cylinder head of all of the forms of the invention shown in the previous figures.

In order to enlarge the cooling surfaces and thus increase the efficiency of the cooling fluid, the cylinder liner **37** may be provided with ribs **37*a*** as shown in Fig. 21.

The amount of surface in contact with the cooling fluid can also be increased by forming the cooling ribs **34** with undulated surfaces or with grooves and protuberances as shown in Fig. 11.

WILHELM SEYERLE.

PUBLISHED

MAY 11, 1943.

BY A. P. C.

W. SEYERLE

COOLING ARRANGEMENT FOR INTERNAL COMBUSTION ENGINES

Original Filed May 14, 1936

Serial No. 189,394

Fig. 12.

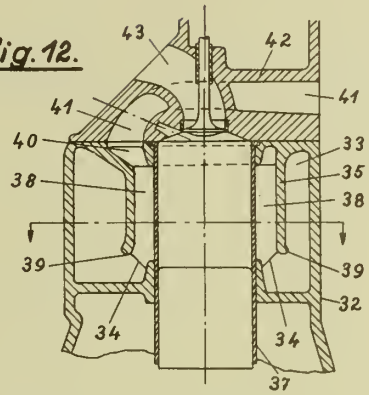

Fig. 14.

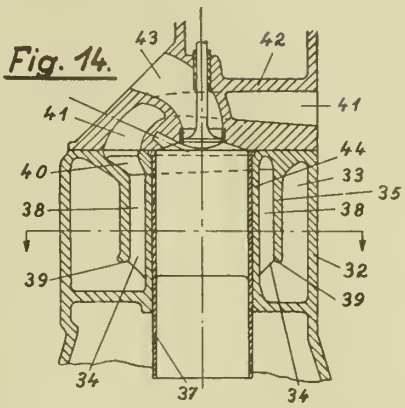

Fig. 13.

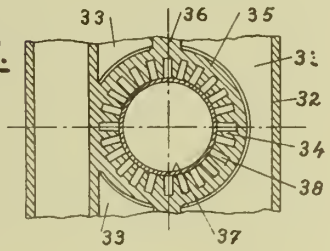

Fig. 15.

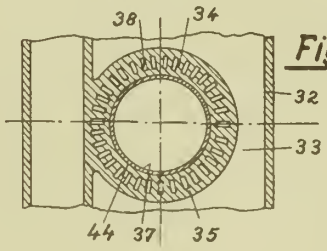

Fig. 16.

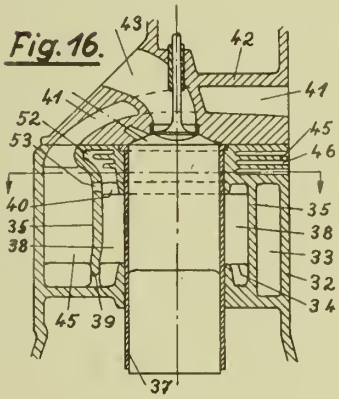

Fig. 22.

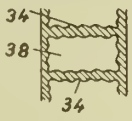

Fig. 21.

Fig. 18.

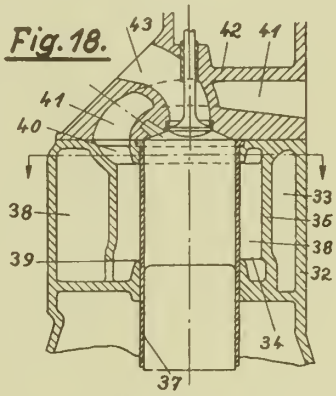

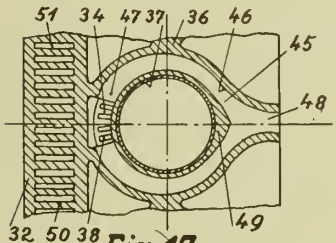

Fig. 17.

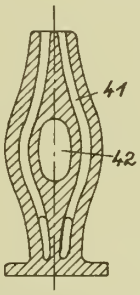

Fig. 20.

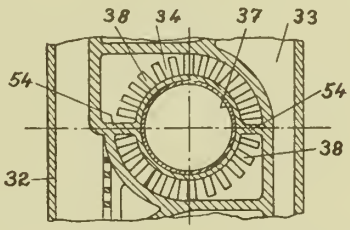

Fig. 19.

Inventor

Wolfgang Seyerle

Published May 11, 1943

Serial No. 191,000

ALIEN PROPERTY CUSTODIAN

MANUFACTURE OF ARTIFICIAL TEXTILE FIBRES

Antonio Ferretti, Milan, Italy; vested in the Alien Property Custodian

No Drawing. Application filed February 17, 1938

This invention concerns improvements in or relating to the manufacture of artificial textile fibres.

A complete process is described in the prior Specification of Patent of the same inventor for the manufacture of artificial textile fibres derived from casein alone or from a mixture of casein and cellulose derivatives, with or without the addition of mineral substances.

The present invention concerns a process for improving the quality of such fibres and for reducing the costs of production.

In the production of artificial textile fibres according to the above numbered Patent Application, the manufacturing process is divided into four essential steps.

The first step consists of the preparation of the basic substance from milk and is unchanged by the process according to the present invention.

In the second step of the process the casein is dissolved, diluted, and matured. It has been found that the stability of the alkaline solution of casein can be increased, when substances which sterilise and prevent fermentation even in an alkaline medium are added to the solution. Thus, for example, phenol effects a powerful sterilising action when in a neutral or acid medium, but is quite ineffective, when it is in an alkaline medium, and therefore while it can readily be employed for the preparation of the casein in an acid medium, it is not suitable for use in an alkaline solution. Formaldehyde is a sterilising agent in both acid and alkaline media, but it has a hardening effect upon casein and therefore it could be employed only in combination with hydrosulphites (aldehydic hydrosulphite). According to the present invention efficient sterilisation is obtained by adding an aqueous solution of sodium hydrosulphite to the alkaline solution of casein. By this addition, the stability of the casein solution is trebled, that is, the said solution is preserved in a state suitable for subsequent spinning over a period which is approximately three times that of an alkaline solution of casein to which sodium hydrosulphite has not been added. Other substances prevent fermentation in a similar manner and preferably those are employed which like sodium hydrosulphite, also have a reducing action.

In addition to the solvents specified in the preceding Patent Specification for increasing the volume of the casein solution without a reduction of the viscosity, it has been found that the same object can be achieved by the use of very small quantities of formaldehyde. For example, 2,100 litres of an alkaline solution of casein, which has been prepared by the process indicated in the Patent Specification referred to, to which sodium hydrosulphite has been added in the above manner, can be increased in volume to 3,150 litres, without a reduction of the viscosity, by diluting the solution with 1,050 litres of water which contain 2 kilogrammes of 100% formaldehyde. If the casein solution has been prepared without the addition of sodium hydrosulphite, it is preferable to reduce the quantity of formaldehyde to 1.70 kilogrammes.

The third step in the process described and claimed in the above mentioned patent Specification concerns the spinning of the solution of casein and the coagulation of the fibres so formed.

In the factories which produce rayon by the viscose system (cellulose xanthogenate), a considerable quantity of residue from the coagulation bath, is wasted. According to the present invention, research has been conducted into the possibility of employing this residue for the coagulation of the casein fibres.

The residue is of a lower concentration than that in a normal coagulation bath, that is it contains less acid and less sodium sulphate.

It has been found that this bath of residual matter can be utilised, provided that the density thereof is greater than 1.18 and the sulphuric acid content is greater than 25 grammes per litre of the bath. Uniform spinning of the alkaline solution of casein is effected with such a bath, but the fibres stick to one another, thus rendering the product unserviceable, unless they are immediately immersed in a sodium chloride solution, to which preferably aluminium salts and form-aldehyde have been added. Instead of sodium chloride, solutions of alkaline metal salts or of earthy alkalies could be applied, but the cost of the process would be increased, and the final product be of less value.

Other baths can be employed for the coagulation of the casein fibres, having a density greater than 1.18 and a sulphuric acid content greater than 25 grammes per litre of the bath, the sodium sulphate being replaced by other soluble sulphates or chlorides such as zinc sulphate, ammonium sulphate, ammonium chloride etc., separately or mixed with one another, but the cost of the coagulation process is correspondingly increased.

The fourth step of the manufacturing process according to the preceding Patent Specification involves rendering the filaments or fibres insoluble, whether they be obtained from casein alone or from a mixture of casein and cellulosic viscose.

It is stated in the above specification that it is important in the production of tuft fibres to maintain the fibres in a stretched condition during the first part of the process, that is during the passage through a weakly concentrated preparatory bath for rendering them insoluble, and to cut the fibres to the desired lengths before they are passed to the successive baths. In this manner fibres are obtained which are only slightly shrunk and which are equally twisted. The winding of the fibres upon bobbins, the immersion into the preparatory bath for rendering them insoluble and the subsequent cutting of the fibres involves three separate operations which are lengthy, difficulty and costly to effect since the apparatus is complicated and requires the service of many operatives.

According to the present invention the process can be effected automatically and rapidly in the following manner.

The fibre bundles which emerge from the spinning nozzles are conveyed to the top of the spinning machine thus forming a continuous band of fibres (for instance: one hundred spinning nozzles having one thousand holes each are equal to a band of one hundred thousand continuous fibres). This band is conveyed, under tension, first through a sodium chloride bath, and if it is desired to remove all or part of the acid and the salts which are carried from the preceding coagulation bath, the fibres are passed in the opposite direction to the flow of sodium chloride; then the continuous band of fibres is conveyed, still under tension, through the preparatory bath for rendering the fibres insoluble, which is composed of sodium chloride and aluminium salts, together with or without the addition of formaldehyde, and when the fibres are sufficiently washed and subsequently hardened, the band is passed through an automatic cutter, which cuts the fibres to the desired length. The cut fibres, as stated above, must be collected in a bath of sodium chloride or of other alkaline metal salts or of earthy alkalies, together with or without the addition of aluminium salts and formaldehyde, but preferably in a bath for rendering them insoluble which is composed of an aqueous solution of sodium chloride, aluminium salts and formaldehyde.

The sodium chloride in the initial immersion bath may be replaced by other soluble alkaline metal salts or earthy alkalies, but, in addition to the increased cost, the resultant product is not so good. Moreover, by the use of a sodium chloride bath, a quantity of sodium chloride is conveyed by the fibre into the subsequent baths for rendering the fibres insoluble, in which baths it is very useful and indeed almost indispensable.

The first immersion bath, which eliminates the acid and the sodium sulphate or other salts conveyed with the fibres from the coagulation bath, could also be omitted, when the said band is immediately immersed in the preparatory bath for rendering the fibres insoluble, or even directly into the complete highly concentrated bath.

The band, which passes through the bath at the same speed as it is spun (60 to 80 metres per minute) may be continuously immersed in the above described baths, but it is also possible to immerse the said band intermittently, for example, at points located one metre apart, making it move upwards and downwards so as to enter the bath over a distance of 10 to 15 centimetres only of its travel, with a distance of one metre between successive immersions.

In the passage of the band of fibres through the baths, two factors are of utmost importance:

1. That the band be under tension when passing through the baths so that it cannot shrink.

2. That the temperature of the bath be greater than 25° C., and preferably between 35° C. and 40° C. for the first bath composed of sodium chloride or other salts, and between 50° C. and 65° C. for the preparatory or for the complete baths for rendering the fibres insoluble.

When these two factors are complied with, the continuous or the intermittent immersing operation of the band is effected in less than five minutes, in conformity with the spinning velocity, and the fibres are sufficiently hard to prevent adhering together, even when coagulation baths of low concentration are employed. The fibres could be cut to the desired lengths immediately and only shrink in so far as the best twist is to be obtained. If, however, a greater twist is required, to the detriment of the fineness of the fibres, the passage of the band through the baths may be effected without maintaining it under tension.

By the above described treatment short fibres can also be derived from casein which are finer than that which can be obtained during spinning. For instance, when the spinning operation is regulated so as to obtain a fibre the count of which is three denier and it is not possible to spin a finer number, the band of fibres should be drawn with a speed which is 50% higher than that of the spinning velocity, and the count which during the spinning was three denier will be reduced to two denier. But when the band is then immediately cut, the fibres will shrink to a point at which the count has returned to three denier Instead, when the said band is made to pass through the above described baths, under tension and at the prescribed temperature, the fibre will maintain the count of two denier.

In view of the fact that the price of wool increases as the count increases it will readily be appreciated that it is of considerable importance to be able to obtain a higher count without any increase in cost.

As a result of the preceding statements it is important that the temperature of the bath into which the hardened fibres are introduced when cut should be greater than 25° C., it being preferable to employ a temperature between the range 35° C. to 40° C.

The treatment for rendering the casein fibres insoluble extends over a very long period, even several days, when carried out in a bath at ambient temperature, which is usually less than 25° C., nevertheless the fibres offer little resistance to boiling extending over a long period. On the contrary, it is found that when the temperature of the baths for rendering the fibres insoluble is raised, for example to between 60° C. and 70° C., perfect insolubility is obtained in less than nine hours, and the fibre which has been treated at that temperature completely resists boiling which may extend over many hours. Before proceeding to this strong treatment it is preferable to pass the fibres for some hours into the collecting bath of the cut fibres at a temperature of between 35° C. and 40° C.

Complete resistance to the extensive boiling could also be obtained, when the casein fibres which have been rendered insoluble at a temperature which is lower than that indicated, for instance at 25° C. to 50° C., are treated, preferably after being washed and dried, with an aqueous solution of formaldehyde at a tempera-

ture of about 60° C. to 70° C. for several hours, for example, five hours. In this case, the addition of the aluminium salts, of sodium chloride or of other soluble alkaline metal salts or earthy alkalies, to the formaldehyde solution is unnecessary.

This treatment could be effected with the dried casein fibres at any desired time, that is to say, even after a period of many months or years from the manufacturing date of the fibre has elapsed.

Above all, it is of great importance that the treatment for rendering the fibres insoluble should be effected at temperatures which are greater than 25° C., and that, when a temperature above 25° C. is applied, the relative operation should take place in an autoclave (digester) which should preferably be rotary, so as to maintain the fibres in motion while at the same time, the bath for rendering the fibres insoluble is made to circulate in the interior of the autoclave.

From the foregoing statements it is clear that in order to avoid deterioration of the casein fibres when they are just coagulated, they should not be rendered insoluble in aqueous solutions which contain more or less high percentages of formaldehyde alone, but other salts such as sodium chloride and aluminium salts should be added to the aqueous solutions of formaldehyde. This is more important when the fibres are rendered insoluble at temperatures above 25° C.

After the casein fibres have been rendered insoluble it is advantageous to treat them with aqueous solutions of monosodic, bisodic, or trisodic phosphate, together with or without the addition of formaldehyde, and this treatment should preferably be effected after the fibres have been dried.

All of the above described processes could be applied to the manufacture of fibres derived from casein, whatever may be the kind of casein employed (textile casein, lactic casein or acid casein, etc.).

Moreover, some of the above stated processes are very important not only for the manufacture of fibres from casein alone but also, although to a less degree, for the mixed casein and cellulose fibres, because better quality products are obtained together with a reduction of the production costs.

In the case of fibres of mixed casein and cellulose, the desulphurating operation, which is normally employed in known manner for rayon which is produced by the viscose system (cellulose xanthogenate), is detrimental. It has been found that such deterioration of the mixed casein and cellulose fibres could be avoided, when sodium chloride or other soluble alkaline metal salts or earthy alkaline salts, together with or without the addition of formaldehyde, are added to the desulphurating solutions. This is suitable also for the fibres of casein alone when they contain sulphur which has to be removed.

It is to be understood that the present invention may be modified or supplemented in various ways without departing from the spirit of the invention.

ANTONIO FERRETTI.

Published May 11, 1943 Serial No. 202,136

ALIEN PROPERTY CUSTODIAN

PROCESS AND APPARATUS FOR THE IMPREGNATION OF FIBRE FLEECES WITH BINDING AGENTS

Carl Ludwig Nottebohm, Weinheim/Baden, Germany; vested in the Alien Property Custodian

Application filed April 14, 1938

The invention relates to a process and apparatus for the impregnation of fibre fleeces with binding agents in the form of foam. The processes known heretofore for the treatment of fibre fleeces with impregnating agents beaten to a foam possess the disadvantages that they produce irregular products owing to the formation of bubbles and folds during impregnation, and in addition are not suitable for the manufacture of impregnated fibre fleeces of any desired thickness.

It has now been found that fibre fleeces can be impregnated with binding agents in the form of foam, while avoiding these disadvantages, by impregnating two fibre fleeces at first each independently with the binding agents in the form of foam, and thereupon assembling and pressing them together, further binding agents in the form of foam being introduced between the assembled fleeces. Expediently, the process is carried out by combining in one working operation the impregnation of the individual fleeces and the assembling thereof, accompanied by further impregnation.

As starting materials for the new process, fleeces or the like structures of natural or artificial fibres are employed. It is possible to employ animal hair, for example wool, animal fibres, for example silk, skin fibres or leather fibres, vegetable fibres, for example cotton, bast fibres, wood fibres, mineral fibres, for example asbestos, or artificial fibres, for example artificial silk. The fibres may be subjected to various pre-treatments according to the nature or quantity of the impregnating agent to be absorbed by the fibre fleece. It is possible, for example, to open up the fibres by boiling, to treat them with oxidising or reducing agents or to impregnate them with wetting agents.

The fibres, pre-treated or not pre-treated, are passed through a carding machine or like apparatus and worked up into a continuous fleece. The fibres may be carded loose or wide and after carding may be more or less strongly pressed.

As binding agent, use is made of solutions, emulsions or suspension, beaten to a foam, of natural rubber, such as latex, or of reclaimed rubber, of rubber-like substances, of nitro-cellulose, of artificial, in particular thermoplastic and reversibly thermoplastic resins, such as polymerisation compounds or mixed polymerisation compounds of unsaturated organic compounds, in particular poly-acryl compounds, polyvinyl compounds or polystyrols, of drying or semi-drying oils, of bitumens, of water-soluble adhesives, such as glue, gelatin tragacanth and other proteins, of binding agents of an inorganic nature, such as water glass or their mixtures. Such foam mixtures may be made from the aqueous solutions of the binding agents or from solutions of organic solvents. It is particularly advantageous to use emulsions or dispersions.

In order to facilitate the foam formation, it is possible to add to the binding agent mixtures substances which reduce the surface tension of the solution or of the disperse phase, for example saponins, glucosides, proteins, decomposition products of carbohydrates and glue, for example mixtures of highly heated sugar with gum arabic, alkali lactates and the like.

If necessary, it is possible to add to the binding agents additional substances, vulcanisation agents, vulcanisation accelerators, softeners, coagulators, for example substances imparting sensitiveness to heat, such as ions of di- or trivalent metals, fillers, such as kaolin, bentonites and the like, which have a consolidating or stiffening action on the foam mass. Furthermore, thickening substances, such as gelatin, methyl cellulose, glue, tragacanth, tragesol and the like may be added.

The binding agents and the additional substances are beaten to a foam in a planet agitator or similarly acting apparatus.

The use of the binding agents in the form of foam possesses considerable advantages. By employing foam, the emulsions or dispersions or even solutions may be mixed with very much less, approximately up to 25% less liquid, without impairing the impregnating properties. By this means, the drying time of the impregnated fibre fleeces can be considerably reduced. In consequence of the light weight of the masses in the form of foam, volumetrically larger quantities of binding agents can be introduced between the fleeces than in the case of the use of liquid binding agents. The feeding of the binding agents in the form of foam can be effected much more easily. Also, there is only a slight loss of impregnating substance during the impregnating operation, because the binding agent in the form of foam cannot flow away so easily at the outer edges of the fleeces. Finally, less attention has to be paid to uniform impregnation than in the case of liquid dispersions or emulsions. In order fully to utilise these advantages, care will preferably be taken to see that the foam structure of the binding agent is preserved during the entire impregnating operation.

The fleeces are impregnated with the binding agents in the form of foam in an apparatus in

which, according to the invention, they are impregnated first each independently and then jointly and assembled. Such apparatus comprises fundamentally at least two movable supports, each of which serves for receiving and carrying a single fleece, spreading devices disposed above said supports for impregnating the individual fleeces and a pressing device comprising two elements pressing against one another, between which elements the individual fleeces are assembled. As movable supports for receiving the individual fleeces, it is possible to employ in the first place rollers, furthermore, conveyor bands or slat type conveyors. As spreading devices, rollers or spreading bands or spreading doctors wil preferably be employed. The pressing device comprises a pair of rollers or a pair of conveyor bands. If rollers are used, they may be heated if desired. They are expediently constructed in the form of sieve rollers in order to carry off excess of binding agent during the pressing operation.

The fibre fleeces may be moved towards one another, for example, on endless conveyor bands arranged horizontally or obliquely at any desired angle to one another, or on rollers, and impregnated in such a manner with the binding agent beaten to a foam that the binding agent is first brought on to each individual fleece, and then introduced between the assembled fleeces.

An apparatus according to the invention is shown in Figure 1. Here fibre fleeces **3** are carried towards one another on endless conveyor bands **2** disposed obliquely to one another and guided over rollers **1**. Above the conveyor bands **2** are spreading rollers **4** by means whereof the binding agent **5** in the form of foam is pressed into the fibre fleeces. The individually impregnated fleeces are assembled and pressed together in the gap between the rollers **6**, further impregnating agent **5** in the form of foam being introduced between the fleeces. The fleeces, jointly impregnated and pressed together, are carried away from the roller gap in the form of a continuous band **7**. More than two fibre fleeces may also be impregnated in this way. For example, as indicated in the dotted part of Figure 1 it is possible, in place of two fibre fleeces, to impregnate four fibre fleeces first each independently on conveyor bands by means of spreading rollers and thereupon to unite them in the pressing device **6**.

In a particularly expedient construction of the apparatus according to the invention, the elements of the pressing device, for example rollers or conveyor bands, serve simultaneously as supports for the impregnation of the individual fleeces. This construction is shown in Figures 2 and 3. In Figure 2, the impregnating apparatus comprises two adjacent horizontal rollers **8** adapted to be moved towards and away from one another by means of the adjusting device **9** and two smaller rollers **10** which are mounted vertically above the first-mentioned rollers and which are held loosely in the guide **11** and rest on the large rollers **8**. The two fibre fleeces **12** are passed over rolls **13** and in each case between two superimposed rollers **10** and **8**, the rollers **10** pressing the impregnating agent **14** in the form of foam into the fleeces. The individually impregnated fleeces are then united between the adjacent rollers **8** to form a total fleece **15**, further binding agent **14** being introduced between the individual fleeces. The width of the gap between the large rollers **8** may be adjusted according to the desired pressure of application. The small rollers **10** press the binding agent into the fibre fleece only by their own weight. They may be exchanged for rollers of different weight, in which case, according to the weight, the impregnating agent penetrates the fibre fleece to a greater or less depth. With a working width of the rollers **10** of 140 centimeters, for impregnating fleeces of about 40 grams weight per square meter, rollers weighing 6 to 10 kilograms are used, for impregnating fleeces of 80 grams weight per square meter, rollers weighing 30 to 50 kilograms are used and for impregnating fibre fleeces of 100 grams weight per square meter, rollers weighing 80 to 120 kilograms are used. The upper rollers **10** may be driven not only by friction on the underlying rollers, but also by a separate driving device.

Figure 3 shows another construction in which the elements of the pressing device simultaneously serve as supports for the individual fleeces. Here, the two fleeces **16** are brought together on two endless conveyor bands **18** carried over rollers **17**. The impregnating agent **19** is introduced in the first place between the spreading doctors **20** and the individual fleeces **16** and is distributed on the surface of the latter, and in the second place is introduced between the two assembled fleeces. A uniform, homogeneously impregnated fleece **21** is led away from the roller gap.

The process and devices according to the invention ensure numerous advantages. The repeated impregnation results in very uniform products, the combined impregnation of the assembled fleeces serving to complete the impregnation of the individual fleeces. The individually impregnated fleeces are applied smoothly to the surface of the pressing device, any formation of bubbles or tongues through air inclusions being avoided. Finally, the invention permits the simultaneous impregnation of a plurality of fleeces with different binding agents. In this case, for example, one, for example, the upper surface of the impregnated fibre fleece may be treated with certain binding agents imparting adhesion of lacquer or coloured binding agents, closing the surface as far as possible, and the other, for example the lower surface, may be treated with colourless or differently coloured binding agents, more particularly adhesive binding agents.

Frequently, the fibre fleeces to be impregnated do not possess sufficient strength, and may be damaged in their fibre structure in the impregnating mechanism. In such cases, it has been found expedient, before impregnation, to treat the fleeces with strengthening and adhesive agents in quantities such that, after drying, there is formed a surface which is close as possible and which, on the one hand, imparts to the fleece a certain firmness and, on the other hand, prevents the binding agent employed during impregnation from passing through and hence prevents soiling of the supports carrying the fleeces. Preferably adhesives which are water-insoluble or even water-repellent are employed. If such pretreated and dried fleeces are employed as starting material, it is possible during the impregnation with binding agents in the form of foam to ensure that impregnation only takes place on the outer surface closed by the pre-treatment. In this case, the pre-treated fleeces are assembled in such a manner that the pre-treated sides of the fleeces are on the outside. In this case also, the fleeces are first impregnated individually and thereupon assembled and pressed together, fur-

ther binding agents in the form of foam being introduced between the assembled fleeces.

In general, double impregnation is sufficient for ensuring uniform products. In some cases, however, it has been found that, despite double impregnation, the binding agent does not penetrate sufficiently deeply and uniformly the fibre fleeces to be impregnated. This is to be attributed to the fact that the binding agent in the form of foam, which is applied to the individual fleeces in the first impregnation, does not wet the surface of the fleeces sufficiently.

It has now furthermore been found that for the purpose of ensuring good and thorough impregnation even with the first impregnation, the individual fleeces, after impregnation, should each be pressed independently and only then assembled. This may be done by arranging between the spreading device and the pressing device, in which the fleeces are assembled, at least one further pressing device for the individual fleeces. According to this construction, each fleece impregnated by means of a spreading roller or spreading doctor is introduced into a pressing device, for example is passed between two rollers, before being assembled with another fleece. The device to be employed for this purpose is particularly expediently constructed in such a manner that the spreading device for the individual fleece is formed at the same time as an element of the pressing device for the individual fleece. Such a device may, for example, comprise three superimposed, horizontal pairs of rollers **22**, **23** and **24**. The fibre fleeces **25** are first passed between the rollers **22**, **23**, the impregnating mass in the form of foam being introduced between the rollers **23** and the fibre fleeces. The binding agent is pressed into the fleeces by the spreading rollers **23**. Thereupon, each fleece is passed round substantially half the upper roller **23** and is taken off by a superimposed counter-running roller **24** after the manner of the clearer of a carding machine. By this means, a pressure is also exerted on the outwardly turned side facing away from the impregnating agent during individual impregnation, said pressure effecting a more intimate impregnation of the fibre fleece with the impregnating material. The individual fleeces passed round the rollers **24** are then assembled between the rollers **22**, further binding agent being introduced between them. A uniformly impregnated total fleece **27** is led away from the gap between the rollers **22**.

The various rollers of such an impregnating apparatus will expediently be selected differently. In some cases, the diameters of the rollers diminish upwardly as shown in the figure. In other cases, conversely, it is preferable to arrange the rollers with the largest diameter at the top. The mounting of the rollers will preferably be such that the angle included by the assembled fleeces is as acute as possible. A better distribution of the foam material on the surface of the assembled fleeces is thereby ensured, which again produces a more uniform impregnation and prevents the forming of pouring folds or creases.

Of course, other pressing devices may be provided instead of the top rollers **24**. Likewise, it is possible to mount a plurality of pressing rollers one above the other and the individually pre-impregnated fleeces may be passed between pressing rollers and turned repeatedly.

If the fleeces according to the construction last described are pressed individually between the individual impregnation and the combined impregnation, it is advisable to pre-impregnate the fleeces more strongly, so that they will be better able to withstand the stresses during their passage round the rollers.

Example

For uniformly impregnating two fibre fleeces 135 centimeters in width and about 140 grams weight per square meter without creases and without tongue formation, they are introduced into an apparatus according to Figure 2. The horizontally mounted pair of rollers **8** have a diameter of 30 centimeters. The upper horizontally mounted pair of rollers have a diameter of about 10 centimeters, a width of 1.40 meters and a weight of about 120 kilograms. The two fibre fleeces are introduced respectively from the sides between a pair of rollers **10** and **8**. Between the fleeces and the rollers **10**, the binding agent in the form of foam of the following composition is introduced:

	Parts
40% emulsion of a poly-acrylic acid ester (marketed under the trade name of Corealgrund	250
Gelatin	20
50% solution of a lauryl alcohol solution	250
Tricresyl phosphate	13
50% saponin solution	50
Emulsifier, 10% casein solution	1

From 10 litres of this solution, 35 litres of foam are produced after beating for 5 minutes in a planet agitator.

The individually impregnated fleeces are now brought together between the rollers **8**, further impregnating agent being introduced between the fleeces. It is possible to use for this combined impregnation the same binding agent as for the individual impregnation. It is also possible, however, to use another binding having for example the following composition:

	Parts
60% latex	160
Accelerator	2
Sulphur	1
Zinc oxide	2
3% wetting agent solution	400
50% saponin solution	15
Indanthrene dyes	5
5% vultamin solution	10

10 litre of this mixture produce about 25 litres of foam after beating for about 5 minutes. The fleece impregnated for a second time leaves the rollers **8** at a rate of about 2 meters per minute and can be passed thence to further treatments. It is completely impregnated throughout and is conspicuous for its smooth surface and freedom from creases.

The resulting impregnated product, if desired after further pressing and dressing, may be employed as artificial leather, floor covering, furniture covering material or motor car covering material.

CARL LUDWIG NOTTEBOHM.

PUBLISHED

MAY 11, 1943.

BY A. P. C.

C. L. NOTTEBOHM

PROCESS AND APPARATUS FOR THE IMPREGNATION OF FIBRE FLEECES WITH BINDING AGENTS

Filed April 14, 1938

Serial No. 202,136

2 Sheets-Sheet 1

Fig.1

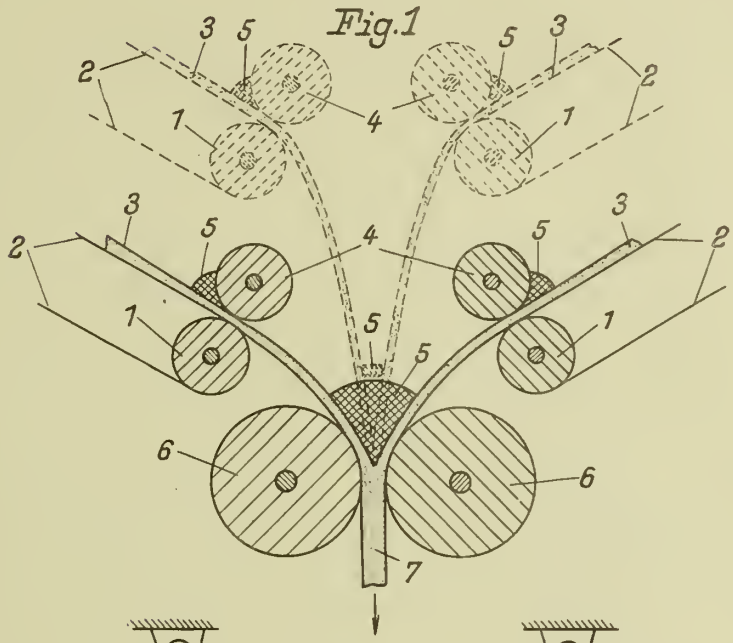

Fig.2

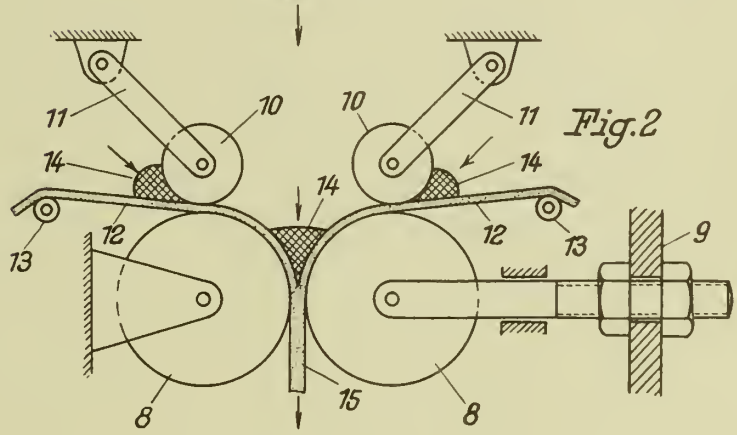

Fig.3

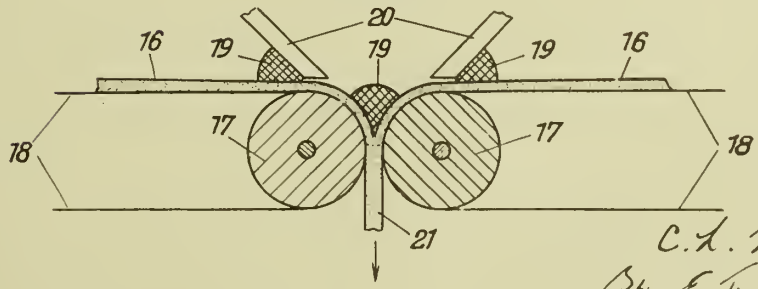

Inventor.

C. L. Nottebohm

By E. H. Wendroth

Atty

PUBLISHED

MAY 11, 1943.

BY A. P. C.

C. L. NOTTEBOHM

PROCESS AND APPARATUS FOR THE IMPREGNATION OF FIBRE FLEECES WITH BINDING AGENTS

Filed April 14, 1938

Serial No. 202,136

2 Sheets-Sheet 2

Fig. 4

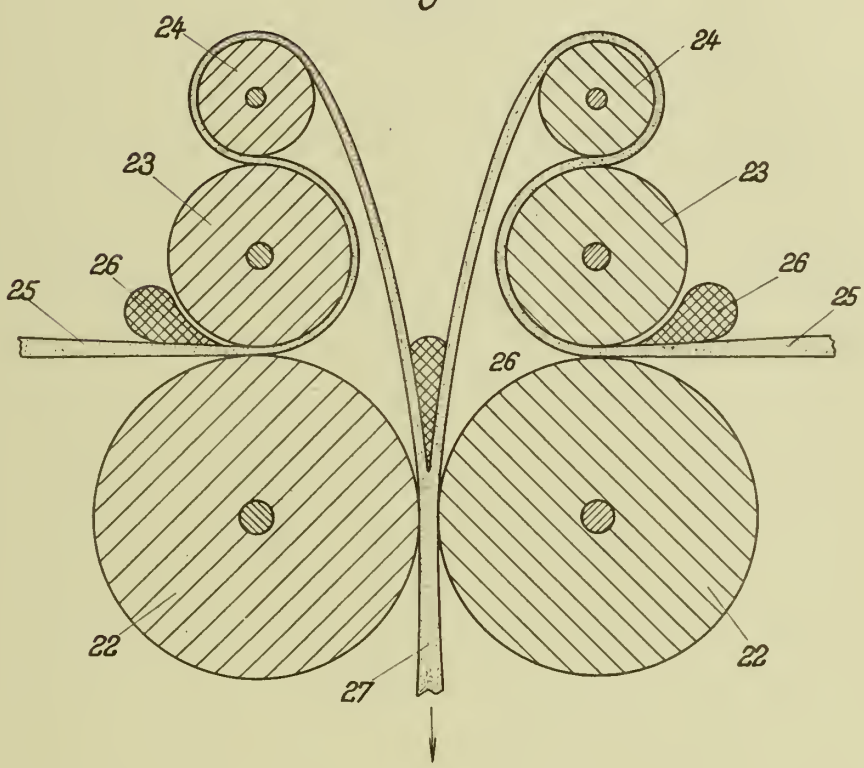

Inventor:
C. L. Nottebohm
By E. H. Vinderoth
Atty

Published May 11, 1943

Serial No. 203,679

ALIEN PROPERTY CUSTODIAN

MATERIAL FOR STRUCTURAL PARTS, AND PARTS MADE THEREFROM

Gustav Adolf Haseke, Bremen, Germany; vested in the Alien Property Custodian

No Drawing. Application filed April 22, 1938

In the Specification of United States Application No. 143399½ a material is described for structural parts, such as structural plates, doors, walls and the like, which material contains as chief constituent any substance of organic or inorganic nature in the form of chippings, shavings, fibres, grains, granules, or powder, and as binder, artificial resin and/or one or several artificial resin distillates or similar substances. The prior application referred to also describes a process for preparing such materials.

The present invention relates to a further form of the invention described in the prior application referred to. The present invention also relates to a material for structural parts, such as structural plates, doors, walls and the like, further, to a process for preparing this material or the structural parts made thereof, and finally to the structural parts themselves made from the said material.

A main characteristic of the invention consists in this that the material contains as chief constituent organic or inorganic fibres, such as wood shavings, wood meal, sawdust, comminuted maize stalks or reeds or maize or corn cobs, coffee bean husks, asbestos or a mixture of these substances, if desired or necessary with addition of set asbestos cement waste or mineral additions such as quartz, trass, soapstone and the like, and as binding agent adhesive substances like casein, dextrine, bone glue, leather glue, natural resin, artificial resins in any stage of the production process, more particularly in the condensation or distillation stage, or mixture of these substances.

In order to prepare structural parts, such as structural plates, doors, walls and the like, from the new material, according to the invention the substance or substance mixture which is to form the chief constituent of the finished material is intimately mixed with the adhesive substance or the mixture of adhesive substances which is to serve as binding agent in a suitable mixture ratio, such as for example 3:1. This mixture, without the substances used being previously prepared in any particular way, say in hollanders or according to one of the known processes of the paper art, and without addition of water is pressed, either cold or with simultaneous heating to temperatures up to 200° C., with a pressure of 50–250 kg per sq. centimetre. When employing heat the mass after this heating and whilst still under the action of the pressing pressure may be cooled down again. In this way warping, twisting or cracking of the pressed parts after the pressing operation can be avoided. The structural parts such as structural plates, doors, walls and the like may be pressed in one piece.

The binding agent may be added in liquid or in powdered state. When using a liquid binding agent the mixture prepared from the chief constituent and binding agents may be dried before the pressing.

For pressing the material hollow plates may be used, the hollow spaces of which, for the purpose of heating and subsequently cooling down the material, may be connected to a steam lead, and to a cooling water lead alternately.

The new material is characterised by high elasticity, satisfactory thermal, acoustic and electrical insulating capability, and high tensile and oscillatory strength.

These properties render the material particularly suitable as structural material for constructional plates of any desired size, even up to a surface area of several square metres. The material is also pre-eminently suited for making walls, doors, ceiling coverings, floorings, wall coverings, intermediate walls, separating walls, water closet walls, and the like. Decorative plates with raised and/or recessed ornamentations can also be pressed from the material.

As compared with ply-wood the material has the particular advantage that it is substantially cheaper from the point of view of production and working up. Waste substances may be used as the main constituent, such as for example set asbestos cement waste or wood shavings or sawdust obtained from saw mills, or other wood working plants in the working up of wood of any kind. The use of such waste substances, which latter have up to now found no other use, renders the production of the new material perfectly economical. Plates of the new material may be used more particularly in place of ply-wood boards. They may also be veneered with sheets or plates of finer wood, asbestos cement or other suitable materials.

The appearance of the structural plates, doors, walls, and so forth made from the new material depends more particularly upon the nature and quality of the chief constituent and on the mixing ratio of the chief constituent and the binding agents. In every case the structure of the chief constituent, that is to say the fibre variety, is clearly apparent on the finished workpiece.

If the articles made from the new material are to have coloured patterns on their surface, then the substances forming the chief constituent may, before mixing with the binding agent, be mordanted, stained, or coloured in some other way. In this way particularly varied and original patterns may be produced such as can be obtained by none of the processes heretofore known.

GUSTAV ADOLF HASEKE.

Published May 11, 1943

Serial No. 211,101

ALIEN PROPERTY CUSTODIAN

PANCREATIC HORMONE PREPARATIONS AND THE PRODUCTION THEREOF

Fritz Lasch and Egon Schönbrunner, Vienna IX, Germany; vested in the Alien Property Custodian

No Drawing. Application filed May 31, 1938

This invention relates to pancreatic hormone preparations for oral administration, and methods of producing the same. More particularly the invention relates to a pancreatic hormone preparation for oral administration, in which anti-enzymic principles are added to the pancreas hormone (Insulin) for the purpose of cancelling or inhibiting the activity of the digestive ferments, and to a method of producing the preparations of this nature. As anti-emzymic bodies organic dyestuffs may for example be employed in accordance with our earlier discoveries in this direction (cf. U. S. Patent application, Serial No. 69,722, filed March 19, 1936), and we have found acid organic dyestuffs to be capable of cancelling the action of the stomach ferments when the preparation is administered per os, while basic dyestuffs have the power of inhibiting the action of the intestinal ferments during the time the preparation is passing through and being absorbed in the intestine. Experiments have it is true been made with other substances which inhibit the action of proteolytic enzymes, but these substances, as is known from the literature on the subject, have proved to be entirely unsuitable for the present purpose or to be of such slight efficacy that it takes a very large dose of Insulin to bring about an observable reduction in the concentration of sugar in the blood. Thus economic considerations were alone sufficient to mark these methods down as failures, and numerous clinical tests have proved conclusively that therapeutically useful results can only be obtained with the use of organic dyestuffs.

When organic dyestuffs are added to the Insulin used in making a pancreatic hormone preparation they have the effect of completely or almost completely inhibiting the action of the digestive ferments after ingestion of the preparation, so that the Insulin is safeguarded from the destructive action of these ferments during its passage through the digestive tract; we have also ascertained that the greater part of the active principle of the Insulin is absorbed by the intestinal wall, particularly if a suitable resorption-promoting substance be added to the preparation, so that the quantity of Insulin required to obtain a desired lowering of the sugar concentration in the blood need only be slightly increased over and above that required when the Insulin is administered subcutaneously.

As far as the therapeutic applicability is concerned the mechanism of the efficacy of an ingested pancreatic hormone preparation is quite different from that of a subcutaneously injected preparation. After injection the blood sugar curve reaches its lowest point some 1½–3 hours after administration, and then rises again relatively rapidly, so that in serious cases it is necessary to repeat the injection in the course of a day. When the preparation is administered per os, on the other hand, absorption takes place only gradually and is consequently extended over a longer period of time, so that the blood sugar curve only falls off gradually, reaches its lowest point after about 6–8 hours, and then rises again only very gradually; thus under otherwise similar conditions the intervals between successive administrations of a pancreatic hormone preparation can be longer in the case of an ingested preparation than in the case of an injected preparation.

As regards the economy of an orally administered Insulin preparation it should be noted that the manufacturing thereof may well be rendered somewhat more expensive owing to the requisite addition of anti-enzymic principles. The present invention, however, is also based on the discovery that in the production of a pancreatic hormone preparation for oral administration to which anti-enzymic principles have been added to inhibit the action of the digestive ferments it is not necessary to start from a perfectly purified final product fit for use for injection purposes, as is the case with Insulin prepared for administration by injection, but that quite on the contrary a protein containing intermediate product may be used, with the result that, without the slightest detriment to the therapeutic efficacy, the manufacturing of the preparation is very much simplified and quite considerably cheapened. In consequence of this fact the manufacturing of a pancreatic hormone preparation destined for administration per os remains an economic proposition even when a considerably larger quantity of Insulin has to be used than in the case of a preparation destined for administration by injection.

As is well known, Insulin for administration by injection is obtained from the pancreatic gland by first extracting the active hormone from this gland, for example by suitable treatment with acid-containing alcoholic solutions. The resulting extract must then be subjected to certain purifying methods, since apart from the active hormonal principle it also contains a number of protein bodies which (if the product is to be injected) must be eliminated without fail since they

would otherwise give rise to dangerous secondary effects after injection.

These treatment steps serving for the removal of protein, such as repeated ammonium sulphate fractionation, electrodialysis for precipitating out protein, and so forth, are very complicated and time-consuming, and therefore tend to render the production of Insulin expensive. In addition, this purification treatment also results in a very large proportion of the active hormone responsible for reducing the concentration of sugar in the blood becoming lost.

The extracting itself must be very carefully carried out for the reason that the pancreas contains digestive ferments, particularly trypsin, which destroy the Insulin unless they are rendered inactive. Now we have found that if anti-enzymic principles are added during the preparing of the initial extract from the pancreas gland, so that the concomitant ferments present therein are rendered inactive, it is not necessary to add any further anti-enzymic principles for the purpose of cancelling or inhibiting the action of the digestive ferments in the stomach and intestine of the patient.

One of the main features of the present invention consists in interrupting a process serving for the recovery of the hormone from the pancreas before the stage at which a final product fit for use as an injection is obtained, and adding anti-enzymic principles, preferably dyestuffs, to the protein-containing intermediate product thus obtained. The process may for example be carried out in such a manner that an intermediate product containing the active substance together with protein bodies is obtained from the pancreas in the manner hitherto usual, and adding anti-enzymic principles to this intermediate product which still contains protein; it is also possible to do without the hitherto usual method of obtaining an extract, and to add the anti-enzymic principles directly to the comminuted fresh pancreas after appropriate preliminary treatment with a water-absorbing substance, for instance acetone.

Examples

(1) Immediately after slaughtering, the fresh pancreas is frozen in a refrigerating mixture. The frozen product is passed through a fine mincing machine, and the resulting pulp intimately mixed in a moist state with an acid and an alkaline dyestuff (e. g. trypan red and malachite green, there being used for every 100 g of pancreas substance at least 0.5 g of trypan red and 0.3 g. of malachite green). The mixture is then dried on flat dishes at a temperature of about 40° C, and the dried product made up into tablets in the usual manner with the use of a suitable filler such as secondary sodium phosphate. Before or during tabletting there may be added a resorption-promoting substance, e. g. a saponin (5 g of saponin per 100 g of substance).

(2) Fresh pancreas is frozen in a refrigerating mixture immediately after slaughtering. An extract is prepared from the frozen product in the usual manner, e. g. with alcohol containing hydrochloric acid, with trituration; to the resulting alcoholic extract there are then added appripriate quantities of dyestuff (0.5 g of trypan red and 0.3 g of malachite green per 100 g of the glandular substance). The solution is then evaporated in vacuo at low temperature, and dried. The product thus obtained is made up into tablets as in Example (1) with the addition of a resorption-promoting substance.

By the present invention a very considerable simplification and cheapening of the manufacturing process is achieved. One kilogram of neat's pancreas contains about 4000 units of Insulin, while the intermediate product obtained by extracting only contains about 2500 units, and the purified final product (entirely free from protein bodies) only has about 1200 units still left therein. Thus in the course of the hitherto usual method of production, as practised for the manufacturing of a final product fit for use in injections, a loss of more than 50% of the active principle is incurred during the purifying stage. With our improved method this loss of substance is completely or almost completely avoided and a product used as the starting material in the manufacturing process, which can be produced in a simpler and more economical manner. It thus becomes possible to produce an ingestible Insulin preparation economically even in cases in which, to bring about the desired lowering of the sugar concentration in the blood a considerably larger Insulin dose has to be taken than would be necessary in the case of a preparation administered by injection.

FRITZ LASCH.
EGON SCHÖNBRUNNER.

Published May 11, 1943 Serial No. 212,074

ALIEN PROPERTY CUSTODIAN

LIGHT WEIGHT SHEET-LIKE CONSTRUCTION MATERIAL

Claude Dornier, Friedrichshafen A. B., Germany; vested in the Alien Property Custodian

Application filed June 6, 1938

The present invention relates to light weight construction materials which are particularly suitable for constructing the fuselage, floats and other parts of aircraft.

When making light weight, sound proof and heat insulating walls it is customary to fill the space provided between comparatively hard and thin surface sheets of wood or metal with light materials such as sponge rubber or the like which materials reduce sound and/or heat conductivity of the walls.

It is an object of the present invention to provide a light, sheet like, sound proof and heat insulating wall construction material the interior of which is of a porous or spongy nature and the surfaces of which, though substantially of the same material as the interior, are comparatively solid.

A further object of the present invention resides in the provision of a light weight, sheet like construction material the surfaces of which are hardened or dense as compared with the interior of the material and interconnected by column- or wall-like reinforcements which extend through the comparatively soft, porous or sponge-like interior. These interior reinforcements may be in the form of ribs which are parallel to one another or they may intersect one another at a right or any other angle so that quadratic or rhombic chambers are formed.

The sheet or plate like building material according to the present invention is practically incompressible and has a surface which is about as hard as wood.

It is another object of the present invention to provide a building material of the type set forth above in which the surfaces and/or other reenforcing parts are further strengthened and particularly their tensile strength increased by inlaying textures or gauze like matter of metal or fibrous material in the customary manner.

An object of the present invention resides in the provision of a building material of the type set forth in which the exterior layer is provided with reenforcement ribs which project into the comparatively soft interior of the material.

An object of the present invention resides in the provision of a method for making material of the type set forth whereby at first an exterior layer including the ribs or columns is produced by casting or other suitable process, then the interior comparatively soft core is added to said layer and afterwards the other surface layer which has been produced separately is applied and then the entire structure, i. e. the hard and soft parts are rigidly united.

Further and other objects of the present invention will be hereinafter set forth in the accompanying specification and claims and shown in the drawings which, by way of illustration, show what I now consider to be a preferred embodiment of my invention.

In the drawings:

Figure 1 is a cross sectional view of a sheet of the material according to the present invention.

Figure 2 is a cross sectional view of the material shown in Fig. 1, the section being taken along line 2—2 of Fig. 1.

Figure 3 is a cross sectional view of a modification of a sheet material according to the present invention.

Figure 4 is a cross sectional view of the material shown in Fig. 3, the section being taken along line 4—4 of Fig. 3.

Like numerals designate like parts in the various figures of the drawing.

Referring more particularly to Figures 1 and 2, 1 and 2 designate the exterior comparatively hard surface layers of which surface layer 2 is provided with columns or stays which extend through the comparatively soft interior material 3 and which are connected with layer 1 after the material 3 is filled in. Figure 2 shows the placement of columns 4 in rows. It is obvious that a different placement may be chosen without departing from the scope of the present invention.

In the embodiment of my invention which is shown in Figs. 3 and 4, the top layer 5 is provided with an inlaying 6 consisting of one or more layers of texture or gauze made of metal or fibrous material. Layer 5 is further provided with interiorly projecting ribs 7. The bottom layer 8 is connected with the top layer 5 by means of walls or ribs 9. The ribs 7 and 9 may intersect one another as shown in Fig. 4. They also may be arranged parallel to one another. Layer 5, as well as layer 8 may be reenforced by inlaid textures and/or inwardly projecting ribs without departing from the scope of the present invention. If only one surface layer has such reenforcement, this should be designated, for example, by marks 10 so that if the material is exposed to bending stresses it is built in correctly. The chambers 11 may or may not be filled with a comparatively soft material 3.

While I believe the above described embodiments of my invention to be preferred embodiments, I wish it to be understood that I do not desire to be limited to the exact details of design and construction shown and described, for obvious modifications will occur to a person skilled in the art.

CLAUDE DORNIER.

PUBLISHED C. DORNIER Serial No.

MAY 11, 1943. LIGHT WEIGHT SHEET-LIKE CONSTRUCTION MATERIAL 212,074

BY A. P. C. Filed June 6, 1938

Fig. 1.

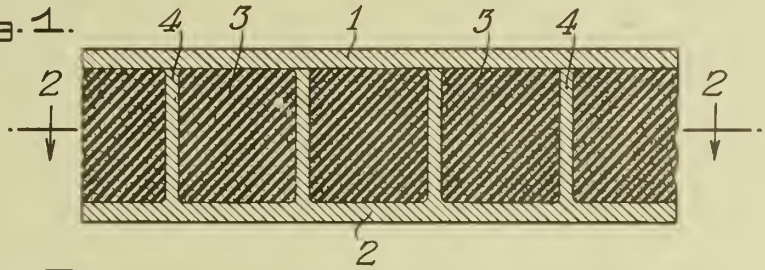

Fig. 2.

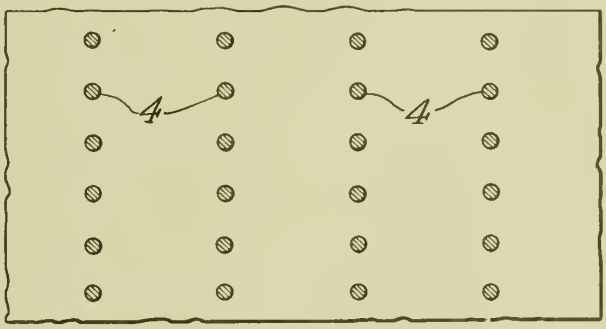

Fig. 3.

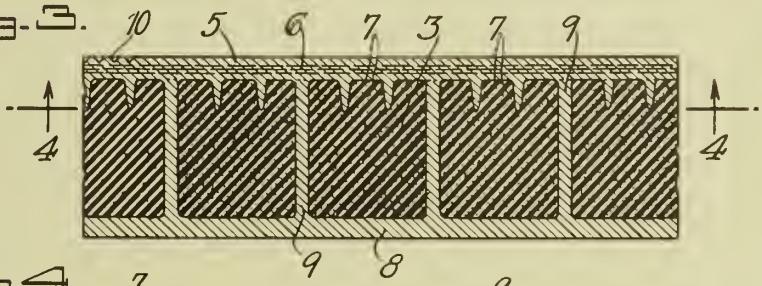

Fig. 4.

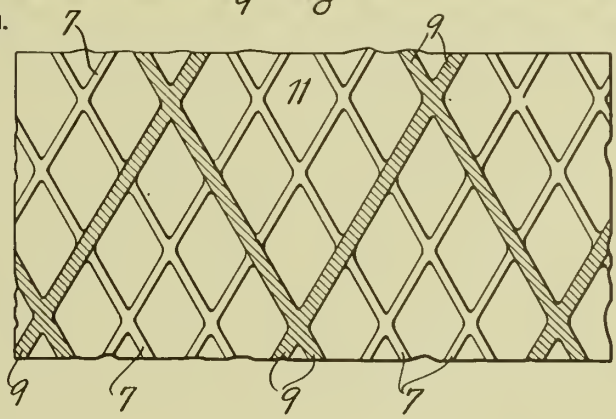

INVENTOR.
CLAUDE DORNIER.

BY Karl A. Mayr.
ATTORNEY.

Published May 11, 1943

Serial No. 212,075

ALIEN PROPERTY CUSTODIAN

LIGHT WEIGHT CONSTRUCTION MATERIALS AND METHOD OF PRODUCING SAME

Claude Dornier, Friedrichshafen A. B., Germany; vested in the Alien Property Custodian

Application filed June 6, 1938

The present invention relates to light weight construction elements which are comparatively thin and particularly suitable for the manufacture of aircraft, and relates to a method for producing elements of the type set forth.

The present invention relates to construction elements of the type specified and made of metal, card board, fibre or any other suitable artificial substance. It particuarly relates to elements which are composed of flat surface elements which are interconnected by corrugated or zigzag shaped stays which are in substantially perpendicular position with respect to the surface elements and which are so narrow that riveting, welding or soldering to the surface elements is not practical or impossible.

It is an object of the present invention to provide light weight, sheet like or beam like construction materials which consist substantially of two surface members which form the exterior skins or flanges and of filling members interconnecting said surface members and of a method to produce such construction materials. I may provide one or more intermediary wall members which are located in between and substantially parallel to said surface members. The filling members may be of undulating or zigzag configuration or they may be of cylindrical or polygonal cross sectional configuration. In all cases the filling members are positioned substantially perpendicular with respect to the surface members.

With the method according to my present invention, the surface or wall members are pressed or rolled in soft condition on to the filling members and are thereby connected thereto. The filling members are in stiff and hard condition during this process step. A modification of my process is to apply a binding material between the edges of the filling members and the surface and/or wall members, for example glue, when the construction elements are made of cardboard or the like.

In many cases, particularly when making large sheets having a great number of filling members, I propose to fasten the filling members or bodies together before applying the surface members. This preliminary connection is not rigid and is only for the purpose of holding the members in position when the surface and/or intermediary sheets are applied.

In order to prevent lateral yielding or snapping of the filling bodies when pressure is applied for pressing the surface sheets to the filling members, I provide special means for lateral propping or supporting. In case of only one undulated or zigzag shaped filling body the propping means conform with said body. When a plurality of filling bodies are used the propping or support means are associated with the outermost support means only.

Further and other objects of the present invention will be hereinafter set forth in the accompanying specification and claims and shown in the drawings which, by way of illustration, show what I now consider to be a preferred embodiment of my invention.

In the drawings:

Figure 1 is a longitudinal sectional view of a girder or beam according to the present invention and taken along line 1—1 of Fig. 2.

Figure 2 is a side view of the construction element shown in Fig. 1.

Figure 3 is a transverse sectional view of the construction element shown in Figs. 1 and 2 and taken along line 3—3 of Fig. 1.

Figure 4 is a cross sectional view taken parallel to the surface members of a construction element according to the present invention.

Figure 5 is a cross sectional view taken parallel to the surface members of a modified construction element according to the present invention.

Figure 6 is a cross sectional view taken parallel to the surface members of another modification of a construction element according to the present invention.

Figure 7 is a cross sectional view of a one filling member construction element with the propping up provisions in position.

Figure 8 is a cross sectional view of a construction element having two zigzag filling members and with the propping up provisions in supporting position.

Referring more particularly to the drawing, Figs. 1, 2 and 3 show a construction element which can be used as a beam or girder and which consists of flanges 1 and 2 and a stay 3 between the flanges which has zigzag configuration. As is obvious from Fig. 3, the flanges 1 and 2 in soft condition are pressed onto the edges of the stay 3 so that said edges are embedded in the flange material after it is hardened. The direction of the pressure for assembling the construction element is indicated by means of arrows 15 and 16.

Figure 4 is a longitudinal sectional view of a sheet like element with a plurality of stays 11, which have an undulating configuration and abut one another. The stays 11 may be held together at a few points by means of small bolts 12 as

shown in order to produce a more rigid construction for the rolling and pressing operation. Instead of bolts 12 rivets, screws, pins, small pieces of wire, welding or soldering may be used.

Figure 5 is a cross sectional view of a construction element according to the present invention in which tubular stays 13 are used. These stays are held together by means of soldering or welding. It is pointed out that the means for holding the stays together are only for facilitating the pressing or rolling operation; permanent rigidness of connection is achieved by the pressing on of the surface sheets as described.

Figure 6 is a cross sectional view of a construction element according to the present invention in which the stays have a polygonal cross sectional configuration. In the embodiment of my invention shown in Fig. 6 the stays 14 are set together in honeycomb configuration. Depending on strength requirements, the polygonal stays may be set together in another way, for example, with the edges abutting one another.

Figure 7 is a longitudinal sectional view of a one zigzag stay construction element showing the propping up or the temporary support members 5 and 6 in position so that the stay 4 cannot collapse during the pressing or rolling operation. Members 5 and 6 are withdrawn after the construction element is completed and may be used again for making another element.

Figure 8 is a cross sectional view of a multi stay construction element according to the present invention with the temporary support members 9 and 10 in position. These support members are in contact with the outermost surfaces of the zigzag stays 7 and 8 only. They are removed after completion of the construction member.

While I believe the above described embodiments of my invention to be preferred embodiments, I wish it to be understood that I do not desire to be limited to the exact details of method, design and construction shown and described, for obvious modifications will occur to a person skilled in the art.

CLAUDE DORNIER.

PUBLISHED

MAY 11, 1943.

BY A. P. C.

C. DORNIER

LIGHT WEIGHT CONSTRUCTION MATERIALS AND METHOD OF PRODUCING SAME

Filed June 6, 1938

Serial No. 212,075

Fig. 1

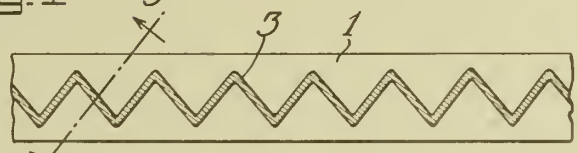

Fig. 2.

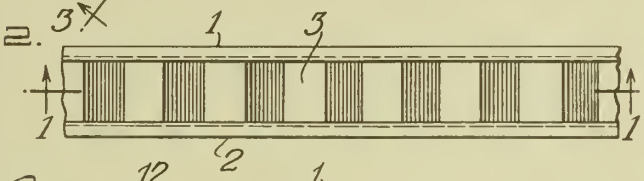

Fig. 3.

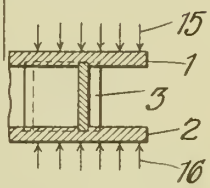

Fig. 4.

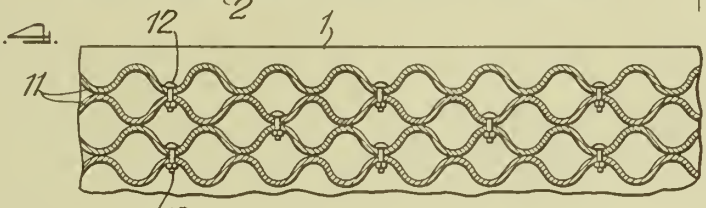

Fig. 5.

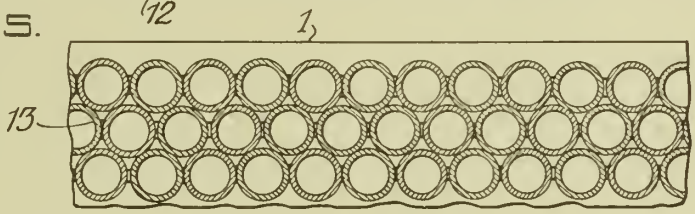

Fig. 6.

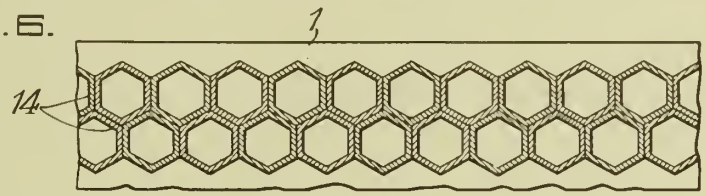

Fig. 7.

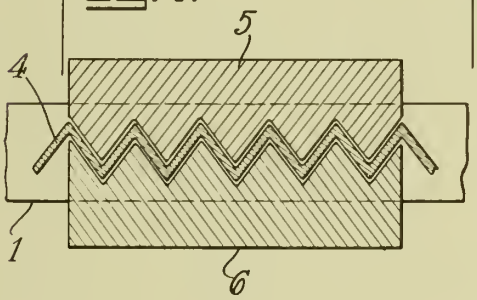

Fig. 8.

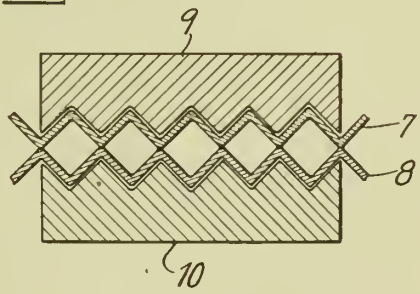

INVENTOR.

CLAUDE DORNIER.

BY Karl A. Mayr.

ATTORNEY.

Published May 11, 1943 Serial No. 222,683

ALIEN PROPERTY CUSTODIAN

HYGIENIC BANDAGE MADE OF AN ABSORBING MATERIAL

Johannes Hildner, Freiburg in Breisgau, Germany; vested in the Alien Property Custodian

Application filed August 2, 1938

Hygienic bandages are known which are made of absorbing material for instance of cellulose cotton wool and wrapped in muslin. It has also been proposed to size the lower layers of the absorbing texture for obtaining a more effective protection for the underlinen. Such bandages however do not meet all demands especially in the hygienic line and afford neither a sufficient protection of the underlinen.

The present invention relates to a hygienic bandage made of an absorbing material having a wrapper of cellulose hydrate foil as proposed already by other parties.

The invention consists however in that, for the foil which is provided on its front side, facing the body, with a large number of holes, an absorbing material is used, which with a view of avoiding rustling noises has been treated in a manner already known.

Besides the upper side of the bandage is formed as a ripping sheet which permits, when torn off, the absorbing filling to drop off or to be removed by hand. The ripping seam of the ripping sheet begins at a tongue-like incision located preferably between the button hole slits and is formed by a row of holes. The holes of the ripping seam are triangular and have one angle of the triangle in line with the intended ripping direction. The ends of the wrapping are reinforced by inserting pressed plaits and by folds across the longitudinal axis of the bandage and are provided at these reinforced places with button-hole slits for attaching the bandage girdle.

An embodiment, as an example of the subject of the invention. is represented by a plan in Fig. 1 and in Fig. 2 by a section on line X—X of Fig. 1.

A layer *b* of suitable thickness of absorbing material is provided in the wrapping *a* as shown in Fig. 1 with interrupted lines. The middle portion *c* of the wrapping, covering the absorbing material, is perforated. As shown in Fig. 1 it is recommended to avoid sharp edges in contact with the human body by choosing round holes. Number and size of the holes may be chosen at will. It is better to choose small and narrowly spaced holes to have the foils just sufficiently solid.

The wrapping is made of a longitudinal foil glued together at the edges to form a hose, the seam being arranged to have the two edges turned inwards as indicated in Fig. 2 at *d*.

It is also recommended to have the bandage made tapering towards the ends, as shown in Fig. 1. To this end box plaits have been provided in the wrapper (see Fig. 2). These box plaits become deeper as the tapering is increasing.

The tapering ends of the bandage possess button hole slits *e* formed by stamping and provided at the ends of the slits with circular holes to prevent any further ripping. It is recommended to provide several slits to permit the adjusting of the bandage higher or deeper. Fig. 1 shows three such slits at each end of the bandage.

By tapering the bandages towards their ends and owing to the glued seam *d* the cellulose hydrate foil shows several layers at its ends. Thereby a sufficient solidity is afforded so that a ripping of the button hole slits is prevented. According to the invention the bandage permits also to have the ends folded along the impressed lines *f* and to have the button hole slits overlapping each other several times to give more solidity.

With a view of having the bandage destroyed after its use it is necessary to separate the cellulose hydrate foil from the absorbing material in a known manner, otherwise the water closets may become obstructed because the cellulose hydrate foil is not soluble in water but holds the absorbing material together, said absorbing material alone being soluble. Therefore the bandage is formed on one side with a ripping foil which after having been ripped permits the dropping out of the filling. It is better to have the face side formed as a ripping sheet, to avoid that the back side be weakened by the required perforations.

Fig. 1 shows such a ripping sheet, the ripping lines of which begin at the tongue-like incision *g* by which the sheet may be seized. It is advisable to let this incision begin as is shown in Fig. 1 between the button hole slits to have it concealed when the ends of the bandage are folded along lines *f*. The ripping seams join said incision. They are marked in Fig. 1 with dotted lines *h*. They may be formed by perforations of any kind.

By experiments it has been proved that the cellulose hydrate foil has no defined ripping direction and that a defined direction of ripping cannot be secured by means of round holes. Therefore according to the invention the holes *i* in Fig. 1 are made triangular and have one corner in the direction of the intended ripping line. The ripping sheet may then be seized at *g* and torn down easily so that the absorbing material drops through the formed opening or may be removed by hand.

The advantages of this bandage consist in the

fact that the absorbing material is perfectly protected. The bandages permit also a sterilising after they have been manufactured since the cellulose hydrate foil supports the temperatures of sterilising. The bandage constitutes also a perfect protection for the underlinen, a fact not easily obtained with other bandages. Also the forming of the perforations prevents a galling of the skin and a plastering over the cellulose hydrate foil excludes a sticking of this foil to the body. Finally owing to the protecting wrapper the absorbing layer may be chosen thinner, whereby the wearing of the bandage becomes easier and less conspicuous. The manufacturing of the bandage may be effected also with machines whereby a sterile manufacturing may be secured. Other suitable textures may be substituted for the cellulose wadding as for instance knittings or cotton textures.

JOHANNES HILDNER

PUBLISHED J. HILDNER Serial No.

MAY 11, 1943. HYGIENIC BANDAGE MADE OF AN ABSORBING MATERIAL 222,683

BY A. P. C. Filed Aug. 2, 1938

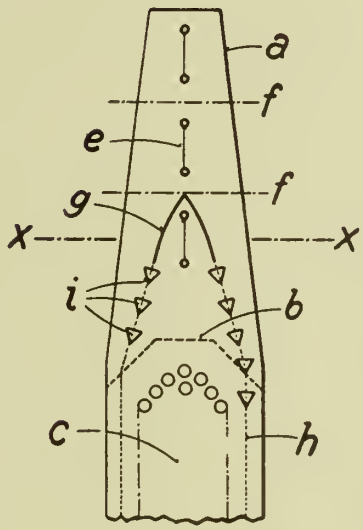

Fig. 1.

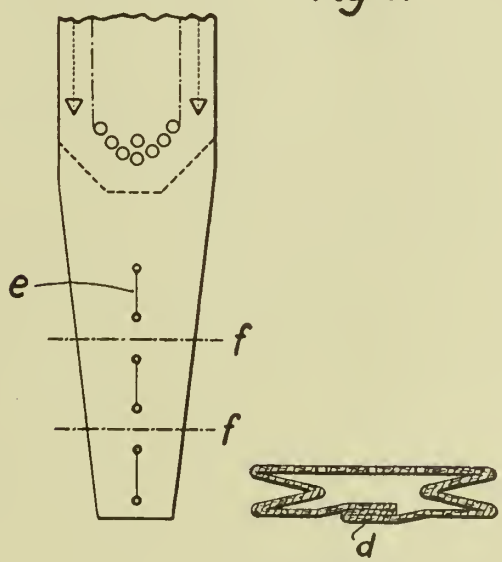

Fig. 2. Inventor:
Johannes Hildner
By Young Emery & Thompson
Attorneys

Published May 11, 1943

Serial No. 224,114

ALIEN PROPERTY CUSTODIAN

METHOD OF BINDING BODIES TOGETHER

Heinrich Prüfer, Vienna, Germany; vested in the Alien Property Custodian

No Drawing. Application filed August 10, 1938

This invention relates to a method of binding bodies together. It is already known to use artificial or synthetic resin for the gluing together of wood, and more particularly of multiply boards of all kinds. For this purpose paper foil impregnated with synthetic resin is used for intermediate layers inserted between the plies to be stuck together. The manufacturing of such adhesive films is effected in a known manner by steeping paper with a condensation product of phenols and formaldehyde dissolved in a solvent such as alcohol, acetone, or the like, or there is employed for the soaking of the paper an initial condensation product, that is to say a product that has only been condensed to such a point that the formation of two layers is avoided, such product being not infinitely diluable with water. The films thus produced are inserted between the sheets or plies to be united, and the whole pressed together in a hot gluing process.

In order to avoid obtaining spoilt work it is necessary that the air in the rooms in which films of this nature are being used for gluing purposes shall contain a certain amount of moisture.

Such solutions (alcoholic or acetonic) are not however suitable for direct application to the surface to be stuck, for example to a veneer, with the aid of a glue spreading machine. Apart from the fact that, when working with the glue spreading machine, which is commonly used for the application of bone, casein, and albumen glue, considerable quantities of expensive solvents go to waste (with the incidental risk of fire and explosion), the solution becomes thickened by this treatment, with the result that the applied layer becomes uneven and material is wasted. This procedure cannot be adopted with a solution of an incipient or partial condensation product, which is not diluable with water either, since, apart from the fact that heating must be continued for a long time before the insoluble and infusible condition is reached, the solution is too thick (resulting in uneven application) and it is also impossible to avoid the concurrent use of water in the machine, for washing purposes, and otherwise, whereby precipitations would be caused.

Further still today it was not possible to lengthen glues based on phenol- or cresol resins with starch or meal, because the mentioned resins are not infinitely diluable or mixable with water. By admixing for example starch, the solution of artificial resin is considerably thickened and it is therefore necessary to admix a large quantity of water. If the solution of resin is not diluable to any extent with water, the resin is precipitated by the admixture of water, forming clumps, so that the glue becomes useless.

The present invention relates to a method of binding bodies together by using a material that has not as yet been employed for this purpose. In accordance with the invention there are employed for this purpose resin soaps, and more particularly soaps of hardenable synthetic resins. As synthetic resins for this purpose there are employed more particularly condensation products of aldehydes with phenols or their homologues or derivatives, the condensation being necessarily carried to such a point that two layers become formed. Such condensation products readily admit of saponification with alkalies, the resulting product being resin soaps or resin solutions which are unlimitedly diluable with water without becoming turbid or precipitating out. Phenol and aldehyde may be used in equal proportions. If more rapid hardening is desirable the condensation may be carried out with an excess of aldehyde.

Natural resin soaps may also be added to the synthetic resin soap for the purpse of bulking the latter, for the sake of economy.

I have found it to be advantageous to add softeners, such as oils, fats, or glycerine, the former in an emulsified or saponified form, to the resin soap solution.

Soaps of this description, provided they be properly diluted, may be directly applied to the surfaces to be stuck together, just like bone, casein, or albumen glue, with the aid of the usual glue spreading machines, or alternatively, foils of various and preferably absorbent material, such as paper or textiles, thin peeled veneers, or even metal foil or the like, may be treated with the said soaps, for example by spreading, steeping, or otherwise, and the thus prepared thin sheets employed as adhesive layers.

When highly absorbent material, such as for example thin veneers of poplar or beech-wood, is employed for the intermediate layers, or when the surfaces to be stuck together are highly absorbent, as in the case of poplar or beech-wood veneers, I have found, that the resin soap solutions, more particularly when directly applied, are for the greater part absorbed by the material and impregnate the same through and through, with the result that the adhesive power, which naturally depends solely upon the adhesive present on the surface, is impaired and the products become spotted.

According to a further form of the invention, these drawbacks are obviated by causing the adhesive to collect on the surface of the surfaces to be stuck together, or by preventing the same from penetrating into the underlying material. This result is achieved by precipitating on the surface of the plies to be stuck together precipitation products from the synthetic resin soaps which are infinitely diluable with water and which may if desired be commixed with natural resin soaps. This precipitating out is effected either by first treating the surfaces to be stuck together with a precipitant, such as for example metal salt solutions (e. g. alum), dilute acids, or solutions of resins not miscible or infinitely diluable with water, the latter being obtainable for example by the condensation of phenols and aldehydes with an excess of alkali. If the solutions of synthetic resins infinitely diluable with water be then at once applied the precipitation products precipitate out on the surface. Or, conversely, the resin soaps unlimitedly diluable with water may be applied first and afterwards the precipitants. The adhesive is thereby effectually prevented from penetrating far into the material. When salts are used the precipitation products may be metallo-resin soaps, when acids are used, resins, and when resins are used as precipitants, mixtures of resins and resin soaps, since all resins and resin compounds present are caused to precipitate out by nucleus formation or by inoculation action.

Both in the case of the first mentioned procedure of applying the resin soaps alone, as also in the modified procedure using precipitants, I have found it to be advantageous to add to the resin soap unlimitedly diluable with water, or in the case of the modified procedure with precipitation, to these resin soaps and to the precipitant solution, or to one of the two, aqueous solutions of such carbohydrates as possess free hydroxyl groups, such as more particularly can sugar, starch or the like. By such addition to the resin solutions a thickening is obtained, even when the resin content is relatively slight, so that the mixture is better suited for spreading. When large quantities are added the addition must not be given too long before the mixture is to be applied to the material under treatment, since otherwise it may happen that actual congealing or solidification occurs. In the subsequent treatment in the hot gluing press the carbohydrates then presumably polymerize or combine with the remaining substances present, with the formation of viscid bodies which thus likewise serve as adhesive, so that the proportion of resin used may be reduced, and corresponding cheapening effected.

The further working up of the spread sheets of material, or of the treated foils, may take various forms, according to whether wet or dry gluing is desired.

In the case of wet gluing, the spread sheets are placed one upon the other while still in the wet state, and pressed under heat and compression. The treated foils may likewise be laid, while still wet, between non-spread sheets, and compressed together with the latter, thus uniting the whole.

In the case of dry gluing the spread sheets or treated foils are first left to dry. Drying is preferably effected at temperatures of 60–80° C or at ordinary temperature. Only sheets on which the resin coating has already dried, or dried treated foils together with non-spread sheets, are united together in the hot gluing press.

As compared with methods in which films (such as for example paper foils) treated with synthetic resins precipitable by means of water for example in alcoholic solution, are employed for the gluing, that according to the present invention affords the particular advantages, among others, of great cheapness and readier applicability even in extremely dry rooms.

According to the described method it is possible to produce for example multi-ply boards of all kinds, and the like, that is to say it is possible to stick wood to wood, and also wood to metal, or wood to compositions such as for example asbestos-cement compositions, and the like. In this manner it is also possible for example to stick various artificial compositions together or to various natural products.

Practical examples of the application of the method according to the present invention are for instance the following:

Examples

(1) Peeled veneers are spread with a 20% aqueous solution of a hardenable synthetic resin saponified with caustic soda, for example of a formaldehyde condensation product which are condensed at least up to the point of the formation of two layers, laid one upon the other in the desired number of plies, and pressed with 8–12 kgs/cm² (114–170 lbs/in²) at a temperature of 130–150° C.

(2) As Example (1), except that the spread surfaces are dried before being superposed, at normal temperature or at a temperature not exceeding 80° C.

(3) Rotary press or other paper, or cotton fabric or other absorbent material, is steeped in a 24% aqueous solution of an artificial resin, for example a hardenable formaldehyde condensation product, which are condensed at least up to the point of the formation of two layers saponified with caustic soda, or spread on both sides with the same, and inserted wet between two plies of wood veneer or between a ply of wood veneer and a sheet of asbestos-cement composition or metal, and pressed under 8–12 kgs/cm² (114–170 lbs/in²) at a temperature of 130–150° C.

(4) An absorbent material, such as paper or the like, is soaked or spread on both sides with a 24% aqueous solution of the type specified in Example (1), dried at normal temperature or at a temperature not exceeding 80° C., and then laid in any desired number between two plies to be stuck together, and further treated as given in Example (1).

(5) Tin or other metal foil is spread on both sides with an 18% aqueous solution of the type given in Example (1) to which there is added 6–8% of a natural resin soap, and then further worked up in the manner given in Example (3) or Example (4).

(6) Peeled veneers are treated with a 3% alum solution or with a solution of synthetic resin not unlimitedly diluable with water, and then coated with a 20–24% aqueous solution of a hardenable artificial resin condensed at least up to the point of the formation of two layers and then saponified with caustic soda, and diluted to any desired extent with water. Precipitates immediately become formed at the surface of the veneers, with the result that the resin is prevented from penetrating into the veneers. The veneers thus treated are then dried at ordinary temperature or at a temperature not exceeding 80° C., placed one upon the other in the usual manner and in the required number of plies, and pressed in a hot

gluing press under a pressure of 8–12 kgs/cm² (114–170 lbs/in²) at a temperature of 130–150° C.

(7) As Example (6), except that the peeled veneers are treated first with the resin soap infinitely diluable with water, and then with a synthetic resin solution not unlimitedly diluable with water or with a 3% aqueous alum solution.

(8) Peeled veneers are treated with a 3% aqueous solution of an aluminium salt (f. e. aluminiumsulfate) or with diluted acids, then coated with a 20%–24% aqueous solution of a hardenable artificial resin, f. e. of a cresol-formaldehyde condensation product condensed at least up to the point of the formation of two layers and then saponified with caustic soda and diluted to any desired extent with water, 30%–50% of the weight of the resin rye-meal or starch being admixed free from little knots. Precipitates immediately become formed at the surface of the veneers, with the result that the resin is prevented from penetrating into the veneers. The veneers thus treated are then dried at ordinary temperature or at a temperature not exceeding 80° C., placed one upon the other in the usual manner and in the required number of plies and pressed in a hot glueing press under a pressure of 8–12 kgs/cm² (114–170 lbs/in²) at a temperature of 130–150° C.

Products glued in the described manner have the same properties as those glued for example with "Tego film", while the manipulation and handling is simpler, and the expense involved very considerably reduced as a result of dispensing with expensive solvents.

HEINRICH PRÜFER.

Published May 11, 1943

Serial No. 226,820

ALIEN PROPERTY CUSTODIAN

HIGH PRESSURE STEAM BOILER FOR INDIRECTLY GENERATING STEAM

Otto Hartmann, Kassel-Wilhelmshohe, Germany; vested in the Alien Property Custodian

Application filed August 25, 1938

This invention relates to a boiler for the indirect generation of high pressure steam and particularly to a novel vaporizer and steam and water separator by means of which a more compact and efficient boiler is obtained.

It is an object of this invention to construct a high pressure steam generating boiler wherein the conventional steam drums are eliminated. Another object of the invention is to construct a compact high pressure steam boiler in which compactness is obtained by use of novel and compact steam and water separating units in place of the conventional steam drums. A further object of the invention is to construct a steam generating boiler in which the primary and secondary steam generating units are connected by a novel and economical pipe system. A further object of the invention is to provide a steam boiler which can be operated with a low water content and without particular regard to the salt content of the feed water in the primary system.

A still further object of the invention is to construct a high pressure boiler for the indirect generation of steam which is of simple construction, economical in operation, and which is no more expensive to build than a simple boiler without steam drums for the direct generation of steam.

Yet another object of the invention is to generate steam in the primary system and to conduct said steam with a small heat loss to the point where it is to be placed in heat exchange with the fluid of the secondary system.

Another object of the invention is to construct a novel vaporizer for economically placing the steam generated in the primary system in heat exchange relation to the fluid of the secondary generating system.

Heretofore high pressure steam boilers of low water content were difficult to operate because the feed water had to be free of salt, or otherwise the valves, superheater and engine would become encrusted with salt deposits. Attempts to use economically a pure feed water were in fact uneconomical because a closed circuit between the boiler and the engine was necessary in order to return the water to the boiler, and this necessitated for the production of steam in the secondary system a relatively large vaporizer, and furthermore resulted in power losses from 8 to 10% in the transmission of water through the vaporizer because of the necessary differential in pressure between the waste steam and the freshly generated low pressure steam. Although the closed circuit between the boiler and the engine apparently resulted in a reduction of the size of the boiler, such reduction in size was not actually obtained because of the necessity of using the large intermediate vaporizer. Furthermore, the entire boiler was complicated and difficult to operate.

In the indirect system of generating steam the steam used to operate the engines is generated in an intermediate vaporizer through the medium of a liquid directly heated in the boiler. Consequently the boiler heated liquid or feed water can contain large quantities of salt without subjecting the steam supply to the engine to such salt concentrations. Such indirect heating boilers have had the further disadvantage of needing large steam drums for separating the steam and water generated.

The objects of the instant invention are in general obtained by providing a primary steam generating system for direct heating in the boiler, which generates steam in a plurality of tubes each of which is placed in heat exchange relation through a series of tubes or tube groups comprising a vaporizer for the generation of the secondary steam, which secondary steam is supplied to the engine. Each of the primary and secondary steam generating systems has steam separators directly at the ends of the individual heating tubes or tube groups. From the steam separator of the primary system the steam is passed to the heating side of the vaporizer preferably formed as a tubular vaporizing member of small diameter. The transmission of heat from the primary to the secondary systems is therefore as favorable as in the prior art types of indirect heating steam generators as it amounts to 2500–3500 kcal/m^2 °C.h This construction allows the building of an indirect high pressure steam generating system of low water content with a cost not greater than that of a boiler for direct steam generation without the use of steam drums, and therewith providing the advantages of indirect steam generation.

The discharge ends of the tubes of the primary system as well as the ends of the vaporizing tubes of the secondary system are led to small steam and water collectors from which the steam passes either to the boiler, or to the superheater.

A means by which I obtain the objects of my invention is described in the following specification, taken in connection with the accompanying drawings, in which:

Fig. 1 is a diagrammatic elevational view partly in section of a boiler embodying the invention;

Fig. 2 is a plan view of Fig. 1;

Fig. 3 is a cross-sectional view of one of the steam and water separators and the steam collector, and

Fig. 4 is a cross-sectional view on the line 4—4 of Fig. 3.

In Fig. 1 the walls of the boiler are shown at A, which boiler contains the combustion chamber B and the flue C.

The secondary heating system consists of a feed water inlet 2 from which water passes into the feed water preheater 4 and thence through the pipe 6 into header 8, and from which through pipe 10 to a chamber 12 of one unit of the heat exchange apparatus or vaporizer D, to be later described. Water is vaporized into steam in D, and thence passed through a steam separator to a superheater 14 to outlet 16, where it is conducted to an engine.

As shown in Fig. 2 the heat exchange unit D is composed of a series of units each of which has a chamber 12 which is connected to the header 8. From chamber 12 a series of tubes 20 extend through a casing 22 and into a second chamber 24. As water passes through the tubes 24 it is placed in heat exchange relation with the liquid heated in the combustion chamber B, as will be later described. The number of units comprising D may correspond to the number of heating tubes contained in the primary system.

From chamber 24 tubes 26 conduct the generated steam to steam and water separators 28 and thence to a collecting header 30, said steam and water separators, and collector being more particularly described in reference to Figs. 3 and 4.

It is noted that chambers shown at 12, 22, and 24 are separated and are sealed at both ends so that the tubes 20 pass through water-tight walls. Each chamber 24 acts as a partial steam and water separator, and the water therein is led back to chamber 12 through pipes 34 and 36. From the collector 30 the separated water is conducted back to chamber 12 through pipe 38.

In order to supply a heated liquid to be placed in heat exchange relation with the water tubes 20 in vaporizer D a primary heating system is constructed which consists of a feed water lead 40 from which water passes to tubes 42 directly heated in the combustion chamber and thence to a steam and water separator 44. From steam and water separator 44, the steam passes to collector 46, and thence through tube 48 to one end of chamber 22. The steam then passes around tubes 20 in chamber 22 and in heat exchange relation with said tubes and is conducted from the other end of chamber 22 through tube 50 to header 52, and thence reheated in the combustion chamber in tubes 54, and led back into the steam and water separator 44 at 56. From the steam and water separator 44, the separated water is conducted through down-comer tube 58 back to the header 40, or may be, if desired, by-passed to header 52 by down-comer tube 60. Thus there is provided a method of vaporizing steam in which a boiler with low water content may be used, and the salt content of the water in the primary system does not affect the steam generated in the secondary system.

The novel steam and water separators taken in connection with the steam and water collectors are disclosed more particularly in Figs. 3 and 4 with respect to the separators 28 and the collectors 30. It is to be understood, however, that the separators 44 and collectors 46 for the primary steam generating system may be and are preferably similarly constructed.

At the outlet end of tube 26 there is secured an enlarged casing 70 within which there is a pipe 72 contacting the outlet end of tube 26. The other end of pipe 72 is enlarged at 76 and discharges through a baffle 78 into the collector 30. Within the casing 70 the upper surface of pipe 72 is provided with openings 80 through which the steam can escape, while the water is carried through the pipe into collector 30.

As shown in Fig. 3 and 4 the steam escaping from the openings 80 in pipe 72 is discharged into the collector 30 on one side of the baffle 78 while the water is discharged onto the other side of the baffle 78. From the collector 30 the steam is conducted through tube 82 to the superheater 14. It is noted that tube 82 enters collector 30 on the steam inlet side of baffle 78, whereas water outlet tube 38 enters collector 30 on the other side of said baffle.

Baffle 78 consists of a plate member extending substantially diametrically of the collector 30, and in order to aid in the steam and water separation may be spaced from the bottom of the tube and supported by brackets 84. Perforations 88 may be provided adjacent the upper edge of the baffle 78 to provide outlets for the steam from the water side of the baffle to the outlet tube 82. Similarly the spacing of the baffle 78 from the bottom of the collector 30 allows water from the steam side of the baffle to collect in the bottom of the tube for drainage into water outlet tube 38. In order to aid further the step of separation of the steam and water on the water side of baffle 78, deflectors 90 are secured adjacent to each opening 88.

By reason of this construction a compact high pressure indirect steam generating boiler of low water content and without steam drums is obtained. Only the relatively small vaporizer D and the collectors 30 and 46 are required. Both the primary and secondary generating systems have automatic return circuits, and may be, if desired, in addition provided with positive circulating systems according to any conventional manner.

OTTO HARTMANN.

PUBLISHED

MAY 11, 1943.

BY A. P. C.

O. HARTMANN

HIGH PRESSURE STEAM BOILER FOR INDIRECTLY GENERATING STEAM

Filed Aug. 25, 1938

Serial No. 226,820

2 Sheets-Sheet 1

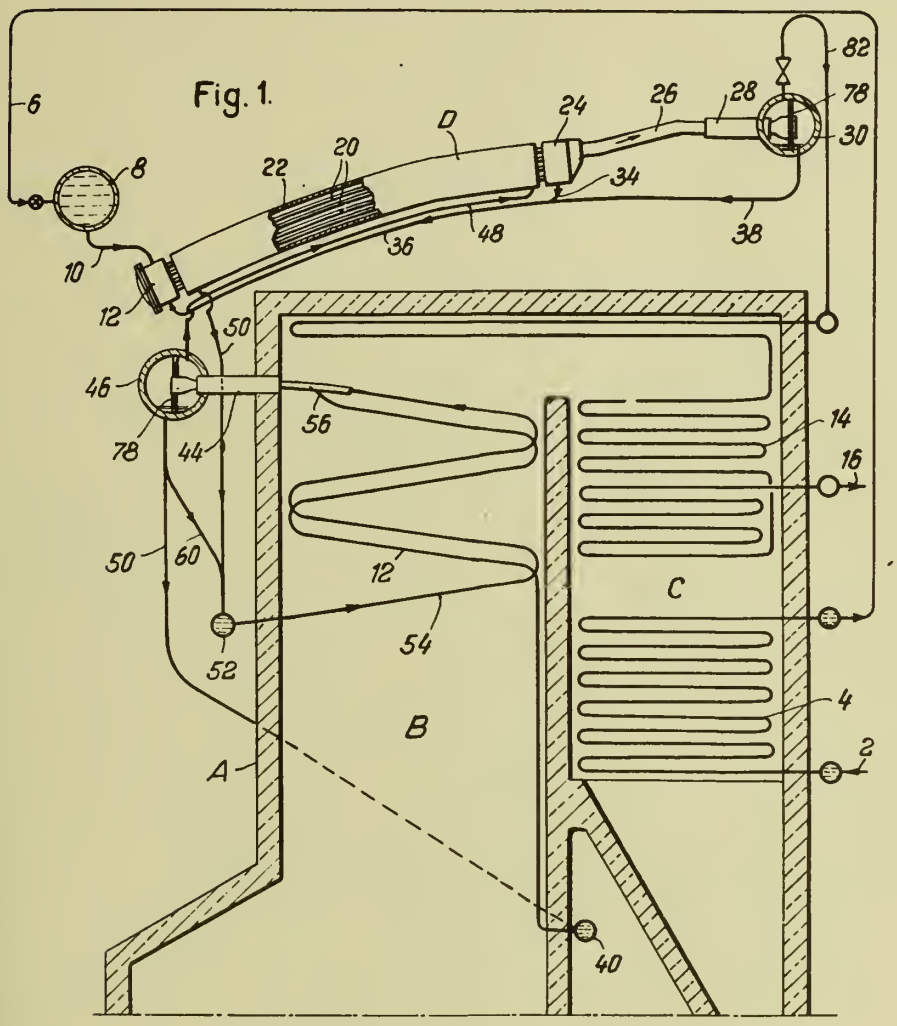

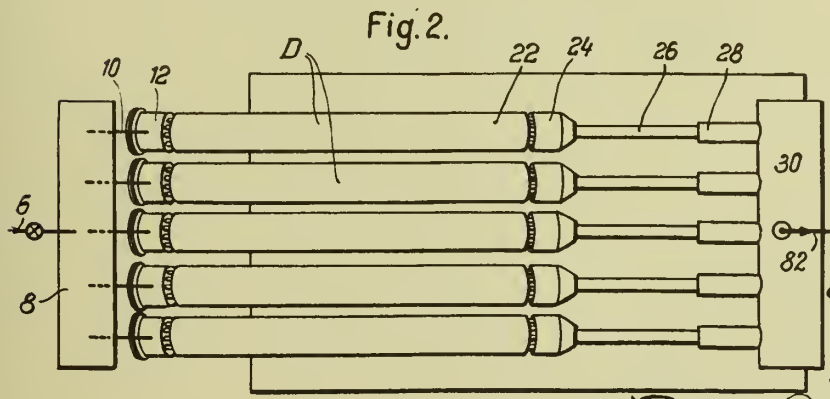

OTTO HARTMANN

Inventor:

BY Bailey & Parsons

ATTORNEYS

PUBLISHED

MAY 11, 1943.

BY A. P. C.

O. HARTMANN
HIGH PRESSURE STEAM BOILER FOR
INDIRECTLY GENERATING STEAM
Filed Aug. 25, 1938

Serial No.
226,820

2 Sheets-Sheet 2

Fig. 3.

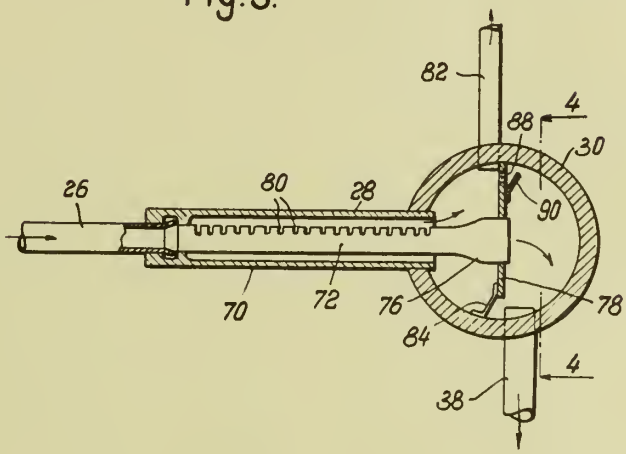

Fig. 4.

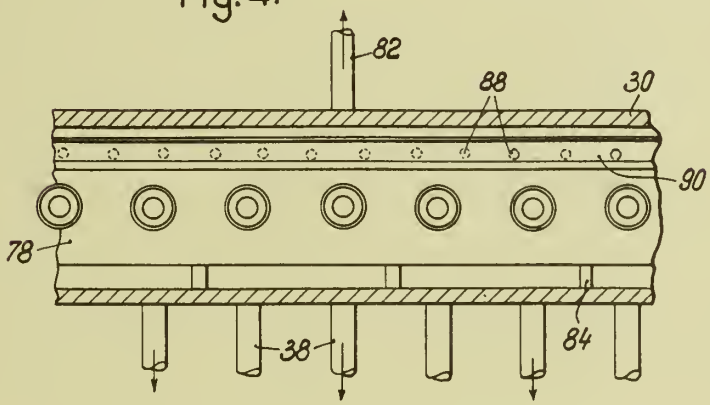

OTTO HARTMANN
Inventor:

BY Bailey & Larson
ATTORNEYS

Published May 11, 1943

Serial No. 229,251

ALIEN PROPERTY CUSTODIAN

MANUFACTURE OF VEHICLE DOORS

Fritz Schnell, Chemnitz, Germany; vested in the Alien Property Custodian

Application filed September 10, 1938

This invention relates to the manufacture of vehicle doors, and more particularly those made of synthetic resin or of a material in which synthetic resin predominates, or in which the synthetic resin is the characteristic constituent, such as in particular fibrous materials impregnated with synthetic resin any of which is hereinafter generally referred to as "synthetic resinous substance" unless otherwise specified. It should be understood from the outset that the invention includes in the term "synthetic resin" any synthetic substance resembling in its essential characteristics synthetic resin proper.

The invention is concerned, more especially, with such vehicle doors which are moulded in appropriate pressing tools, subjected in addition to heat, reinforcing ribs or like reinforcement being united in the pressing operation in a manner not unlike homogeneous welding with the main body of the door at the parts thereof which, in use, are subject to the heaviest stresses. Known methods of manufacturing such vehicle doors employ for the main body of the door laminated materials saturated in synthetic resin and united with the reinforcement in a single step operation.

The principal object of the present invention is to overcome the drawback attaching to such known methods which consisted in the laminated material being difficult to mold into the required shapes often of awkward section with projections, recesses and other constructional or ornamental detail. For this purpose the invention contemplates the employment of disintegrated fibres, as distinct from the fibres of an integral fibrous material, such as is used in the laminations above referred to, such disintegrated fibres being unidirectionally arranged for the purpose of giving the main body of the door the strength it requires per se. A synthetic resinous substance, the base of which is constituted by such fibres is more readily moldable and thus overcomes the above drawback to a great extent. With this principal object in view the invention consists in the addition of a further step or operation whereby a semi-consolidated body, being the main body of the door, is first preformed under slight heat and pressure, from a composite substance of such disintegrated fibres unidirectionally arranged and impregnated with synthetic resin as mentioned above, the said fibres being obtained and additionally treated to form the said composite substance in a convenient manner, such as the manner which will be hereinafter more specifically described when reference is made to the accompanying drawings; the semi-consolidated body so preformed will comprise the essentials of the main body of the vehicle door, namely, a thin walled panel portion, and a peripheral rim portion, and is then associated with a suitable reinforcement of a synthetic resinous substance in a further step and finally united therewith under considerable heat and pressure, the whole being at the same time consolidated.

A further object of the invention is to make the manufacture of the vehicle door more economical, which, is achieved by the use of disintegrated fibres to form the main body and by far the largest part of the vehicle door, for while only fairly good quality material can be used for the laminated material employed in known methods, any waste material can be used for the method according to the present invention, as the material is first of all subjected to a treatment to disintegrate the fibres and prepare the composite substance above referred to, the considerable saving in cost and materials easily outweighing, in particular in mass production, any economical disadvantage due to the slightly lengthier process.

A further and subsidiary object of the invention is to provide an effective reinforcement whilst saving any preforming operation for this reinforcement by the use of laminated fibrous materials as a base for the synthetic resinous substance for the reinforcement. The use of such laminated materials in the case of the reinforcement has the advantage that the structure of the material is well adapted to the course of the lines of force and the distribution of stresses arising in the door when in use. On the other hand, the reinforcements being normally of simple shape the difficulty otherwise experienced in the molding does not arise in their case. The laminated material for the reinforcing ribs or other reinforcement preferably comprises strips of paper or fabric or textile or other fibrous materials superposed in several layers.

It is another object of the invention to make use of the initial preforming step of the method according to the invention by providing recesses in suitable places in the preformed semi-consolidated body, particularly at the highly stressed zones thereof, the reinforcing members being not merely placed on the semi-consolidated body in the second step of the method and then "welded on," as it were, but are actually inserted in the recesses so as to partly protrude therefrom, and this results in a particularly strong and effective reinforcement having approximate-

ly the effect of the reinforcing metal inserts frequently embedded in synthetic resinous substances.

As a still further object the present invention contemplates the addition of a dressing of a synthetic resinous substance containing fillers in irregular distribution throughout the substance. This substance is particularly moldable and the dressing can be applied at sharp corners formed between two rim portion sides, or elsewhere on the rim or panel portion or reinforcement to round off such corners, and elsewhere it can be used, if necessary, to cover the reinforcements where these are not flush with the rest of the face of the door and generally to cover any unevenness and fill any gaps, bearing in mind that rounded corners, flush, even and continuous faces facilitate lacquering and other finishing work. The dressing is expediently applied simultaneously with or subsequent to the assembling of the reinforcement with the semi-consolidated body and the whole is then united, molded and finally consolidated to form the complete door.

With the above and other objects in view the invention consists in the improved method and in the improved vehicle door, including various constructional features, produced by said method, of which an illustrative example is given in the following description of one form of vehicle door manufactured in accordance with the present invention, and the steps necessary to its manufacture, reference being made to the accompanying drawing.

In the drawing:

Fig. 1 is an inside perspective view of a finished automobile door, the product of the method according to the invention, without fittings and accessories.

Fig. 2 is a section on the line II—II of Fig. 1.

Fig. 3 is a sectional elevation on an enlarged scale of part of the door shown in Fig. 1, the section being on the line III—III thereof.

Fig. 1 shows the finished door consisting of a panel 1 and a rim 2, 3, 4 and 5, constituting the main body of the door. Reinforcing ribs 6, 7, 8 and 9, 10, 11 are united with the panel 1 and joined to the rear rim side 3 near the places 12 and 13 where the door hinge members will be mounted when the door is provided with the necessary metal fittings. The ribs 6—11 are disposed in the manner of bundles of rays converging at the places 12 and 13 as shown and extending upwardly on the rim side 3 at those places, (see Fig. 2) thereby giving substantial reinforcement to the places where the heaviest stresses will obtain when the door is in use. Further reinforcement is provided along the rim side 3, as shown in detail in Fig. 3, by a reinforcing layer 14 let in and united with the back of the rim side 3, which for this purpose is formed with a recess at that place, the recessed part being made flush with the remaining back faces of the rim side 3 by a plate 15 united with the reinforcing layer 14, depressions being left on either side of the plate 15 to receive hinge members. The front rim side 5 of the door is molded with recesses 16 and 17 to receive usual rubber buffers. The sharp corners formed on the inside of the rim side 5 by the recessed portions 16 and 17 and the sharp corners formed at the junctions between the rim side 2 and the rim sides 3 and 5 are filled with quantities of material 18, 19, 20, and 21 to round off these sharp corners, whereby lacquering and other finishing work is facilitated. The bottom rim side 2 is formed with holes 22 and 23 to receive screws, the rim side 2 being reinforced at these places by reinforcements 24 and 25 and a similar reinforcement 26 is united with the rim side 3 near the centre thereof, where another screw hole is provided, as will be seen more clearly from Fig. 3.

Describing now in detail the method of producing the door, the main body comprising the door panel 1 and the rims 2, 3, 4 and 5, are first preformed into a semi-consolidated body in the following manner;

Long narrow fibres obtained by disintegrating waste paper materials such as by treating old cement bags or waste packing paper or the like in a pulping machine or hollander are placed in a container where they are loosely suspended in a liquid such as water, over a sieve mould mounted in the container, the water in the container containing at the same time the required amount of synthetic resin in a distintegrated form. The fibres in the container are then subjected to suction such as by creating a partial vacuum at the bottom of the container and a predetermined amount of fibres in proper admixture with synthetic resin is deposited on the sieve mould to form a layer of uniform thickness, the fibres owing to the sucking action, being arranged in substantially unidirectional alignment not unlike the disposition of the fibres in solid or compact fibrous bodies. The amount of synthetic resin added to the fibres depends upon the degree of elasticity ultimately required in the finished door. The sieve mold defines the shape of the outline of the door. The composite substance formed by the aligned fibre deposit, the binding synthetic resin and a certain amount of water saturation then undergoes a felting action so that when the sieve mould is subsequently removed a coherent plastic body is formed which remains integral, even without the support of the sieve mold and which has the shape of the outline of the door. This plastic body is then subjected to a preliminary pressing operation in a heated press mold where the absorbed liquid (water) is pressed out and the plastic body is subjected to a hardening action and molded into a semi-consolidated body of the final shape of the main body of the door, i. e., members 1—5 of the door as shown in Fig. 1 but without the reinforcements 6—11, 14, and 24—26 and the dressing 15 and 18—21. The next step consists in assembling the semi-consolidated body 1—5 with the necessary reinforcement and dressing in a final hydraulic press mould, the whole being then subjected to heat and pressure of which the pressure is considerably greater than was required for preforming the semi-consolidated body 1—5.

The reinforcing ribs 6—11 may also have been preformed into semi-consolidated members in like manner as was the body 1—5, the semi-consolidated members being then placed in position on the semi-consolidated body 1—5 in the final hydraulic press mold; in the present example, however, the reinforcing ribs 6—11 are not preformed but are placed on the semi-consolidated body 1—5 in the form of laminations of coherent fibrous materials such as sheets of paper or textile material saturated in synthetic resin this laminated material being applied to the body 1—5 in the form and disposition of the individual members 6—11, as shown in Fig. 1. The reinforcing layer 14 is also applied to the back of the rim side 3 in the form of such laminated fibrous material, (e. g., paper or textile material), by being placed in the recess preformed for this

purpose in the semi-consolidated body 1—5, so as to connect together the two places 12 and 13 where the hinge members are subsequently to be mounted. The plate 15 partly covering the reinforcing layer 14 so as to partly fill the recess and make it flush with the remainder of the back faces of the rim side 3 is then applied in the form of either laminated fibrous material of approximately the same composition as the layer 14 or, as in the present example, of a synthetic resinous substance, which may be plastic, containing fillers in irregular distribution. The quantities of dressing 18—21 are then applied by filling the sharp corners with a synthetic resinous substance containing fillers such as is already known. Further reinforcing layers 24, 25, 26 of laminated fibrous material saturated in synthetic resin are applied on the inside of the rim sides 2 and 3 adjacent the screw holes.

This whole assembly is then pressed in the final hydraulic press under considerable pressure and heat as already mentioned above, whereby the non-preformed parts are finally moulded, the dressing 18—21 in particular spreading and moulding itself into the rounded shape shown in Fig. 1, and the whole is united together as though welded together and is finally consolidated to form the complete door shown in Fig. 1.

Where laminated synthetic resinous substance has been used in the above example, it is of course not confined to laminations formed of plain sheets of fibrous material such as paper or fabric, but includes the use of layers of fibrous material puckered after the manner of crepe paper, such puckered material being particularly suitable, as the resinous substance of which it is a constituent is more readily pliable in the mold and can be made to conform to complicated shapes and contours of the mold with greater accuracy. By way of modification, the network-like marks and impressions left by the sieve mold on the front rim of the door in the preforming process can be concealed by being covered with a layer of pure synthetic resin applied thereon before the final pressing and molding operation, thereby giving a perfectly even surface.

FRITZ SCHNELL.

PUBLISHED
MAY 11, 1943.
BY A. P. C.

F. SCHNELL
MANUFACTURE OF VEHICLE DOORS
Filed Sept. 10, 1938

Serial No.
229,251

Fig. 1.

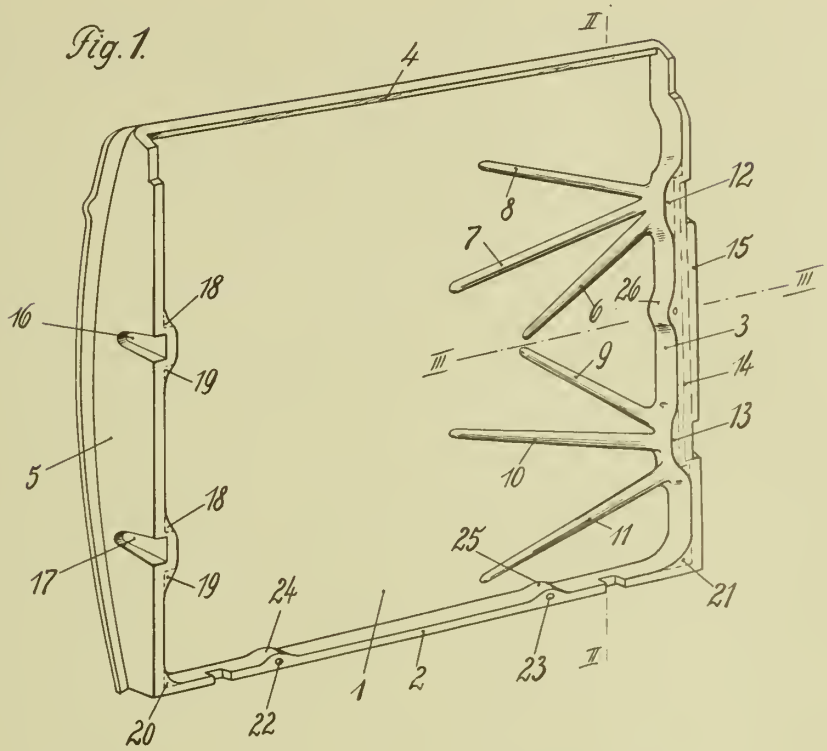

Fig. 2.

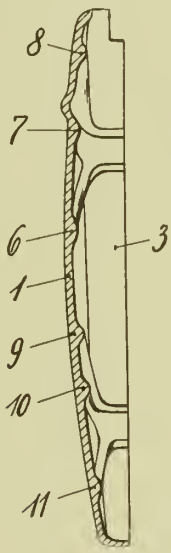

Fig. 3.

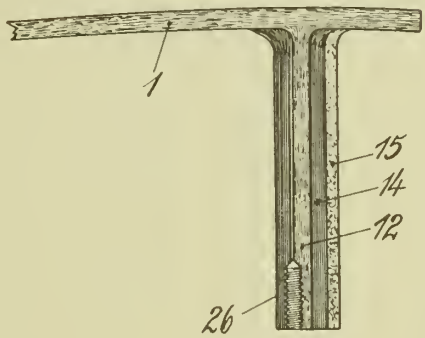

Inventor:
FRITZ SCHNELL

By:
Richards & Geier
Attorneys:

Published May 11, 1943

Serial No. 229,798

ALIEN PROPERTY CUSTODIAN

MANUFACTURE OF COMPOUND LUMBER

Wolfgang Bäseler, Munich, Jakob Dietrich, Munich-Laim, and Willy Lüty, Essen, Germany; vested in the Alien Property Custodian

Application filed September 13, 1938

This invention relates to manufacture of compound lumber; and it comprises a method of making compound lumber from plies of wood or other fibrous material which may have considerable thickness, said method comprising assembling layers of fibrous material with alternate layers of a thin electric conductor, usually in the form of a network of resistance wires, a wire screen or a foraminous metal plate, a heat-setting adhesive also being introduced into the resulting joints, then subjecting the resulting assembly to pressure and simultaneously heating said conductor internally by an electrical method, which may involve the passage of an electric current through said conductor or the use of induction heating, thereby producing heat-setting of said adhesive in situ and the formation of permanent bonds at said joints; all as more fully hereinafter set forth and as claimed.

Ply-wood and other laminated products have found many new uses in the industrial arts within the past few years. This is due largely to improved methods of manufacture and the use of heat-setting adhesives, such as the phenol-formaldehyde resins. One method of using phenol-formaldehyde adhesives in the manufacture of plywood, for example, is described in the U. S. patents to Weber et al, Nos. 1,960,176 and 1,960,177. In the method there described the adhesive is used in the form of sheets or films which are made by impregnating thin tissue paper with a phenol-formaldehyde resin in its initial stage of condensation, followed by drying said adhesive to a non-tacky state. These adhesive sheets are inserted between plies to be united and the assembly is subjected to heat and pressure in a press provided with heated platens, the heat being passed through the plies to the joints. The heat produces setting of the adhesive and the articles can be quickly removed from the press in a finished state. A more recent improvement involves the production of reinforced compound lumber by the use of adhesive sheets comprising foraminous metal sheets coated with a phenol-formaldehyde resin, for example. These reinforced adhesive sheets are inserted between plies to be united, followed by the application of heat and pressure, as described in the copending application, filed of even date herewith, by Dr. Willy Lüty. This new method has likewise greatly extended the range of usefulness of compound lumber. But up until the time of the present invention no wholly satisfactory method has been known, whereby heavy or thick layers of wood and other materials could be combined to form compound lumber, this term, including combined paper board and other fibrous materials as well as laminated wooden products.

In attempting to combine thick layers of wood, for example, with the use of a heat-setting adhesive, it has been found that the heat of the platens of the usual press takes too long to pass through the thick layers in order to reach the joints. It is necessary to employ high platen temperatures in order that the joint may eventually reach the relatively high temperatures required to produce setting of the adhesives. This produces a considerable amount of steam, from the moisture present, and this steam is driven into the joint. It may be sufficient in quantity to retard or entirely prevent the setting of the adhesive. For these reasons it has been considered necessary in the past to resort to cold-setting adhesives in the production of compound lumber from thick parts. These low temperature methods, however, are cumbersome and expensive. In the gluing together of large pieces, for example, hours or days are required for the adhesive to set satisfactorily. And during this long period it is necessary to keep the pieces under high pressure. The clamping devices required for this purpose are cumbersome and expensive, since they must be made of heavy material in order to withstand the high stresses which are developed. Machine presses have been employed in order to produce the initial pressing. But when such presses are used it is necessary to remove the pieces from the press and to apply some type of screw clamp to maintain the pressure, owing to the rather obvious fact that it would not be economically feasible to leave the pieces in an expensive machine press for the length of time required to produce final setting. Needless to say this method has likewise not proved to be economical. For these reasons compound lumber made from heavy pieces has not been widely employed in the arts.

The difficulties involved in making compound lumber from heavy parts, as outlined above, are eliminated by the present invention. In our new process any of the usual heat-setting adhesives are employed and these are quickly set in situ by means of heat and pressure. But in the present method the heat required to produce setting is generated in situ rather than being passed through the plies which are being united. This result is accomplished by the use of metallic conductors in the joints which are heated electrically to produce setting of the adhesive. Electrical heating may be accomplished by inducing eddy

currents in the metal or merely by passing an electric current of high amperage through the metal to produce resistance heating. The temperatures produced in the joint can be closely controlled with both of these methods.

The metal conductors employed in this invention may be of various types and shapes. If desired resistance wires of nichrome or other resistance alloy may be used. These wires may be formed in the shape of a band of sinuous shape, for example, which is spread out to form a network substantially covering the surface of the joint. It is not necessary that such conductors cover the entire surface of the joint since the heat conductivity of the molten adhesive is rather high and since the adhesive tends to flow in the joint before setting takes place. It is also possible to employ wire screening, wire gauze or perforated sheet metal, as described in the acknowledged application of Dr. Lüty. And, if desired, the metal conductors may be pre-coated with the heat-setting adhesive before being employed, as also described by Dr. Lüty. If resistance wires are used, with some distance between the wires, the pre-coating method is of special advantage since the coated wires tend to hold the plies apart until the adhesive has softened and at this point the excess adhesive on the wire flows readily to penetrate the spaces between the wires.

If the electric conductor is not pre-coated there are various ways in which the adhesive may be applied. For example, it is possible to coat both faces of the articles to be united, to lay the conductor on one of the coated faces and then to apply adhesive over the conductor. When the conductor is made of resistance wire which is spaced apart some distance or when made from a wire screen it is possible to place the conductor over one of the surfaces to be united which is uncoated and to apply the adhesive over the conductor. In this case the adhesive will usually pass through the conductor and spread satisfactorily on the surface beneath. But it is generally more satisfactory to pre-coat the conductor with the adhesive and to dry the adhesive to a non-tacky state before it is used without impairment of its heat-setting properties. The sheeted adhesive thus produced is convenient to handle and produces excellent results.

As stated previously, any of the usual heat-setting adhesives may be employed in our new method. These include, solutions of heat-setting gums and the like, but best results are obtained with the heat-setting artificial resins, such as the phenol-formaldehyde resins. We prefer to employ the alkaline condensation product of phenol-formaldehyde in its initial stage of condensation. This can be produced, for example, in the manner described in the acknowledged patents to Weber et al. It is also possible to employ the solutions of phenol-formaldehyde resins in various organic solvents which are sold on the market as Bakelite varnishes, for example. The conductors of our invention can be pre-coated with these adhesives by spraying or dipping operations, for example. It is possible to pass the conductors continuously through a bath of an adhesive, followed by heating to dry and harden the adhesive without impairment of its heat-setting properties as described in more detail in the acknowledged application of Dr. Willy Lüty.

If foraminous sheet metal is employed as the conductor in this invention, inductive heating is advantageous. These sheet metal conductors may be made of various shapes. For example, it has been found advantageous to provide them with reinforcing ridges or projecting knobs or spikes and the like which become embedded in the plies and produce interlocking engagement between the plies and the metal. Reinforcing ridges may be provided to oppose shearing forces, for example, the ridges being placed perpendicular to the shearing forces.

It is possible to vary the heat generated at various portions of the joint by varying the cross section of the metal conductors slightly or by varying the spacing of the resistance wires. The smaller the cross section of the metal, the more the heat generated. And when resistance wires are used, the closer the spacing, the more the heat generated. It is also possible to bend the metallic conductors to fit joints of different shape. For example the joints may be roughened, notched or dovetailed and the conductors can be bent in a corresponding manner.

Our new method has several important advantages. The thickness of the parts which are united has no effect whatever upon the time required to produce setting of the adhesive. It is thus possible to unite thick planks for the production of I-beams, for example, as readily and quickly as it was formerly possible to unite thin veneers in the production of ply-wood. We have also found that the parts to be united may contain a substantial quantity of moisture without affecting the set produced. Any steam generated by the heating is driven out of the joint or is absorbed by the cooler adjoining fibrous material without damaging the adhesive. The heat generated by the electrical heating is highly localized and therefore only a small quantity of heat is required. The consumption of electricity is small. It is also possible to unite any number of plies simultaneously into a single unit; a result which was impossible under former practice. Our method is extremely flexible and can be suited to almost any type or shape of joint which is desired in the production of compound lumber of any desired thickness.

Our invention can be described in somewhat more detail by reference to the accompanying drawing which illustrates, more or less diagrammatically, several different ways of conducting the process of the present invention, as well as showing several different forms of metallic conductors which can be employed in this process. In this showing

Fig. 1 is a partial vertical section through a piece of compound lumber assembled in a press ready to be united by heat and pressure, the heat to be supplied by the passage of an electric current through the conductor,

Fig. 2 is a vertical section through a work plate on which there is mounted a pressed assembly of wooden plies with alternate layers of foraminous metal conductors this assembly being surrounded by an induction coil adapted to supply internal heating to produce setting of the adhesive in the joints,

Fig. 3 shows an assembly of resistance wires which may serve as a metallic conductor within this invention, while

Fig. 4 is a side elevation of one section of a dovetailed joint with a foraminous sheet metal conductor in position, in said joint.

The drawing is supplied with appropriate legends which are believed to make the various fig-

ures self-explanatory. In Fig. 1 there is shown an assembly of three wooden plies alternating with two layers of a metal screen which serves as a metallic conductor and also, incidentally as a reinforcement. The assembly is shown mounted in a press, of which the press head and press table are partially shown. The metal screen is attached on both sides to a source of current which, of course, may be either alternating or direct. A variable resistance is included in the circuit by means of which it is possible to vary the current through the reinforcement and therefore the temperature attained in the joint. The temperature required to produce setting of a phenol-formaldehyde adhesive, for example, is about 130° C.

In Fig. 2 a work plate is shown on which there is mounted a similar assembly of wooden plies alternating with metallic conductors, after having been combined by means of heat and pressure. The conductors shown in this figure are in the form of perforated plates. They are provided with reinforcing ridges which, as shown, become imbedded in the plies and serve to strengthen the resulting compound lumber. The assembly is surrounded with an induction coil which serves to produce internal heating by induction, that is, by inducing eddy currents in the metallic conductors. The induction coil is shown attached to a variable transformer which in turn is connected to a source of high frequency current. The temperature produced within the joint can be easily regulated to that which is required to produce proper setting of the adhesive.

In Fig. 3 there is shown an assembly of resistance wires which is in the form of a sinuous belt. This belt can be inserted between plies of fibrous material to be united and can be adjusted readily to provide the proper shape and spacing of conductors to produce the desired internal heating of the joint. If desired this belt can be coated with adhesive and dried before it is inserted in the joint.

In Fig. 4 there is shown a side view of one section of a dove-tailed joint with a metallic sheet conductor in position in the joint. The metallic conductor shown is in the form of a wire screen which is filled or coated with a heat-setting adhesive. This screen is shown attached to a source of current for resistance heating. The cooperating dove-tailed section, not shown, is inserted into the section shown from the left side of the figure as is believed to be evident from the drawing.

While we have described what we consider to be the best embodiments of our method, it is evident that many details can be varied widely without departing from the purview of this invention. In its broad scope our invention involves the manufacture of compound lumber with the use of heat-setting adhesives, said adhesives being set in situ in the joints by heat supplied from electrical conductors which are present in the joints, the said conductors being heated electrically. While it is evident that the advantages of this method extend to the production of plywood and thin veneers, it is especially applicable to the manufacture of compound lumber from thick parts which cannot be economically united by methods employed previously in the art. Our new method is capable of uniting thick pieces as cheaply and satisfactorily and with substantially the same rapidity of production as this could be accomplished in the case of thin veneers by methods used previously in the art. It is therefore evident that our method has greatly extended the range of utility of compound lumber. Modifications of our method which would be evident to those skilled in the art and which fall within the scope of the following claims we consider to be within our invention.

WOLFGANG BÄSELER.
JAKOB DIETRICH.
WILLY LÜTY.

PUBLISHED
MAY 11, 1943.
BY A. P. C.

W. BÄSELER ET AL
MANUFACTURE OF COMPOUND LUMBER
Filed Sept. 13, 1938

Serial No.
229,798

Fig. 1.

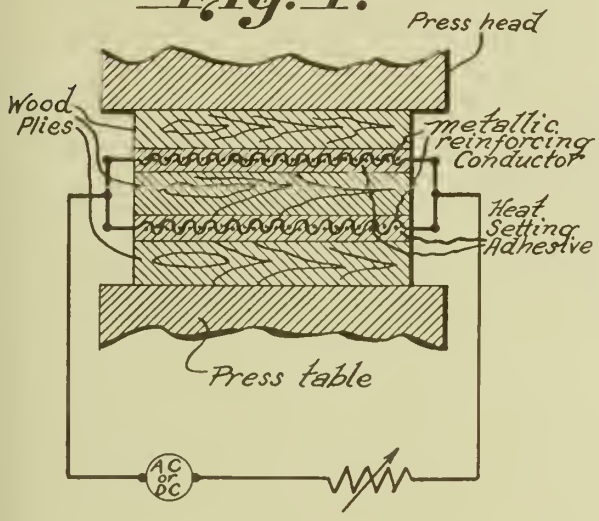

Fig. 3.

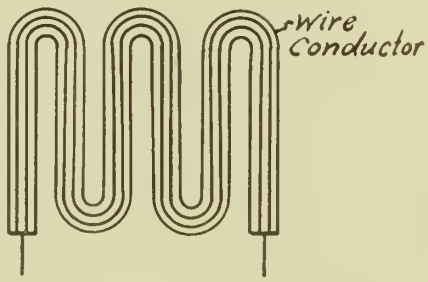

Fig. 2.

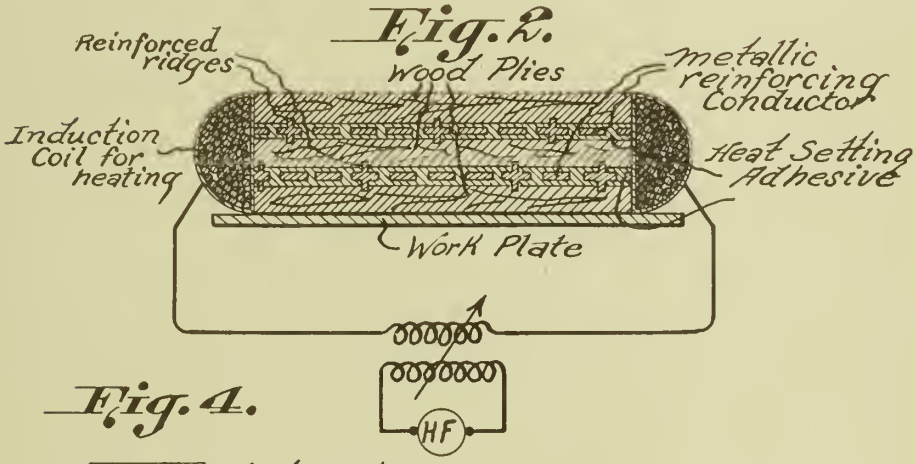

Fig. 4.

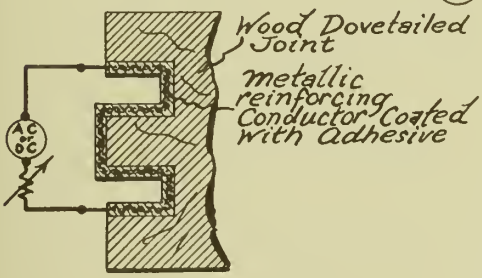

Inventors,
Wolfgang Bäseler
Jakob Dietrich &
Willy Lüty
BY Henry C. Parker
ATTORNEY

Published May 11, 1943 Serial No. 236,335

ALIEN PROPERTY CUSTODIAN

FLOATING BREAKWATER FOR REFRAINING THE WAVE MOTION OF WATER

Alfredo Varni, Pallanza (Novara), Italy; vested in the Alien Property Custodian

Application filed October 21, 1938

As it is known, the wave motion of sea and lakes is due to the pendular elliptic motion of the liquid particles under the action of the wind, by which the water surface appears like a plurality of trochoidal cylinders which displace, as figures, according to the direction of the wind and are tangent to the ellipses (with the longer axis horizontal) described by the liquid particles.

It is also known that a relation exists between the height of the waves and the distance from each other thereof; moreover, when the waves meet an obstacle they undergo a substantial modification of shape losing a considerable part of their energy. Said helicoidal motion is not only superficial but extends somewhat also in the deep and the particles beneath describe ellipses whereof the diameter decreases as the depth increases.

Of course, reference is made here to wave motion in high sea, practically deprived of any transport or hit action, in contrast to that near the shore or influenced by the bottom.

The present invention has for its object to dampen said wave motion, and refers to a floating breakwater consisting of at least two floating beams, at a suitable distance from each other, but connected and fastened to each other by a rigid structure.

A floating system of this kind, sufficiently long with respect to the troughs formed by the waves, when situated so as to afford its side parallel to the main line of the waves or oblique thereto, will attain the effect of dampening, in correspondence to each single beam, the wave motion so that the same will be considerably lessened after having gone beyond the first beam, owing to the frontal obstacle afforded by the same as well as to the friction resistance of its walls and specially of its bottom wall. The successive passages against and under the next beams will succeed in completely dampening the waves, thus creating a calm region leeward which may result absolute and perfect if the number of the successive beams constituting the breakwater is suitable to the circumstances.

Moreover, the rigid connection between the various beams, which fastens the same to each other, establishes a certain compensation between the undulatory movements to which the various beams would singularly undergo, when said movements are not synchronous, this concurring in producing the dampening desired and rendering the construction more stable, thus affording to the same the real character of a breakwater capable of refraining the wave motion.

The efficacy of said leveling or breaking effect may be most considerable if the width of each single beam and the distance between two successive beams will be conveniently selected with respect to the maximum length of the waves or the troughs created by the same in the spot where the breakwater is placed and the leveling effect will be obviously enhanced by the longitudinal extension of the system, also upon this extension depending the stability of the system against any direction of the wave motion with respect to the direction of the floating breakwater, said stability influencing in turn the same leveling effect aimed.

So as to better clarify the nature and the range of the invention, the same will be described hereinbefore with reference to the attached drawing wherein:

Fig. 1 represents diagrammatically the cross section of a breakwater consisting of two floating beams rigidly coupled to each other as well as the profile of the wave motion in the presence of this floating system;

Fig. 2 represents the breakwater in a side view;

Fig. 3 represents also diagrammatically a mode of connecting various distinct sections of such floating systems, with the object of refraining the wave motion on very long distances or very long waves, in which cases more of such articulate independent systems might be used as successive parallel filters;

Fig. 4 represents diagrammatically another of the numerous other structures obtainable by the employ of the beams according to the invention.

In Fig. 1 two floating beams A, A′ are supposed to be connected to each other by rigid transversal structures B keeping the same at a suitable distance. The floating system thus composed is supposed to be merged by more than half the thickness of the floating beams in a water surface whereon waves *m* arrive in the direction C, which waves, in the absence of said floating system, would continue to extend by successive undulations. The presence of the float A, instead, causes that the wave, already in contact with the first vertical wall of the first obstacle, cannot reach the primary height both by the superficial friction against said wall and the facility wherewith the local hydrostatic pressures depending upon the differences of level of the waves may find their way under the beam either in whirls turning back towards the low part of the same wave, or generating currents sliding under the plane basis of said beam. Having passed beyond the obstacle consisting of said first float, therefore, the waves are considerably flattened, as it appears in *m′*, so that in the interspace between the two floats A, A′ a considerably calmed zone is formed. In correspondence to the beam A′ the same phenomena take place with a further dampening of the wave motion, so that after the beam A, that is towards D, the water level may be considered as practically constant. Should, however, this not happen, the wave motion being

either too violent or such that the crest of the wave should overflow the upper plane of the first obstacle, it will be sufficient to multiply the number of the successive obstacles.

The determination of width of the beams A, A′ and the like and the distance between successive beams represent a problem of pure hydrodinamic technics which must be placed taking into account of the local circumstances which may be foreseen or determined by direct observation; the same is to be said about the draught to be established for the work so that no discontinuity of contact with the water should take place thereunder. Of course it will be preferable that the aforesaid distance should be equal to a semi-wave or to a multiple or submultiple thereof, in relation to the characteristics of the most probable or most ample wave motion, and it will be also preferable that the single obstacles should have an wide base, smooth or rough or, if desired provided with fins or vertical walls projecting downwards, whereunder the most efficient absorption of kinetic energy from the wave could take place by friction.

Practically the structure according to the invention may take the form represented by Fig. 1, wherein each of the floats A, A′ has a rectangular cross section and is, for instance, subdivided into cells by means of internal vertical partition indicated by the dotted lines L Fig. 2; longitudinal partitions also may be introduced. These two beams are connected to each other by rigid transversal structures B, consisting, for instance, of parallel girders, which may be covered by a longitudinal continuous floor H whereon a road may pass or loads, airplanes and the like may rest.

Obviously, therefore, when a wave strikes the outer side, for instance, of the beam A, said wave, after having lost a great part of its own kinetic energy against the side and under the basis of said beam, finds between beams A and A′ a space of storage and rest, after which it finds a very efficient further dampening against the wall and under the basis of the second float. The dampening action will be still more efficient when the successive floats will be more than two.

If the transversal connecting structures B upon the floating beams A A′ and the like will be connected to each other by other girders incorporating the transversal girders and parallel to the length of the floating system, as indicated by Fig. 2, a planking having the real consistency of a continuous beam will be obtained, said planking being capable of withstanding bending and twisting moments, independently from the own resistance of the floating beams. Said beams A, A′ and the like, therefore, may be, in some cases, individually continuous as described in the Patent Specification 2,029,004, or else they may consist simply of ranges of floating caissons, even separated from each other, made of any material such as wood, sheet metal, cement, plates of artificial resins and the like, and connected to each other and to the girder above by any suitable means; when the floating girders are continuous, however, it will be necessary, to obviate to thermal effects, not only that they be vertically sectioned (by double waterproof walls nearly touching) for the emerging part, but also that the reticular structure thereupon be longitudinally sliding with respect to said beams, whereto said structure must be rigidly connected in one point only and slidingly connected in all the other points. Said floating systems consisting either of continuous beams or ranges of caissons, may be constructed either on the spot according to said Patent Specification 2,029,004, or else in the dock-yard and then launched and towed to the spot, where they may be fastened to the above girder B, either in contact with each other or somewhat removed longitudinally in two or more ranges. The transversal or longitudinal connecting girder B of Figs. 1 and 2 may also be assembled before placing the caissons or the forms for the progressive moulding in water of the floating beams, as indicated by Fig. 2, right, to facilitate thus the performance of the work also on wavy water, by temporarily connecting said forms to the girder for the moulding operation.

It is not necessary that the floating structures according to the invention should develop in a straight line; they may develop according to any polygonal or curved profile or form articulated compositions as that diagrammatically represented by Fig. 3, so that it may result very easy to construct not only floating roads (as the dampening effect in question has a considerable influence on the stability of the work) but also floating wharfs or quays and moles, and also very long continuous or articulated breakwaters for the formation of ports of very low cost and completely free from any requirement of natural configuration of the shore or bottom, high sea parts and finally floating airports, which might serve also for hydroplanes, when at least three floating breakwaters be disposed so as to circumscribe a zone of sea with or without an entrance aperture. For constructing a floating airport, for instance, the most simple and rational construction would be the one represented by Fig. 4, consisting of three floating beams A, A′, A″, disposed so as to form an equilateral triangle, which should form already three paths for starting and arriving, at 120° to each other so that six azimuth directions to be utilised in relation to the direction of the wind. The number of paths might further increase when the structure be provided internally with diagonal or radial branches B, B′, B″ and C, C′, C″, which should bring, with the foregoing, the number of the directions to 12. In both cases within the floating beams a zone or zones of calm water would be constituted, wherein hydroplanes might descend and rest; said zones might communicate with one another under the platforms and also with the exterior, through the passages E, E′, E″, F, F′, F″ and G, G′, G″ or otherwise.

Of course, the above triangular structure has been described as a non limitative example, any other conformation suitable for each being adoptable without exceeding the limits of the invention.

Moreover, the shapes of the floating beams, their constitutive materials, the forms of their connections and the structures of the superimposed floors may be selected according to requirements. Of course, also the processes to follow for the construction in water of the manufactured pieces required will vary.

It is equally obvious that these breakwaters must be anchored to the sea bottom or to the shores in a sufficiently loose way as it is used for the ships in the high sea, considering that they will result much more stable than ships.

ALFREDO VARNI.

PUBLISHED

MAY 11, 1943.

BY A. P. C.

A. VARNI

FLOATING BREAKWATER FOR REFRAINING THE WAVE MOTION OF WATER

Filed Oct. 21, 1938

Serial No. 236,335

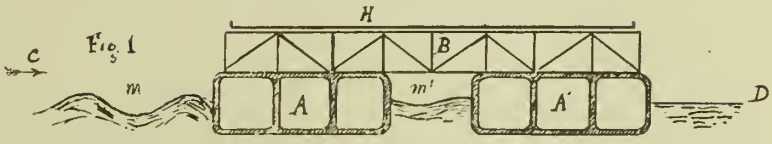

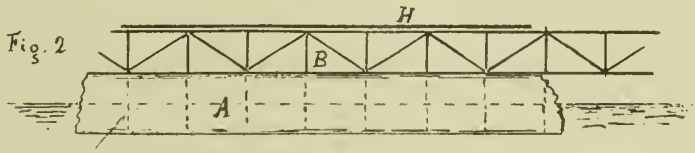

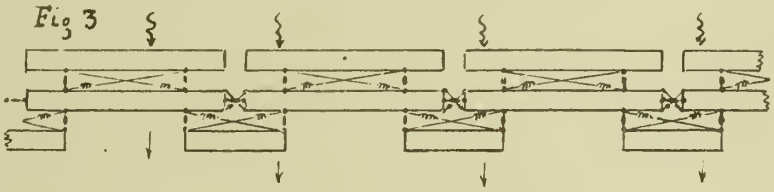

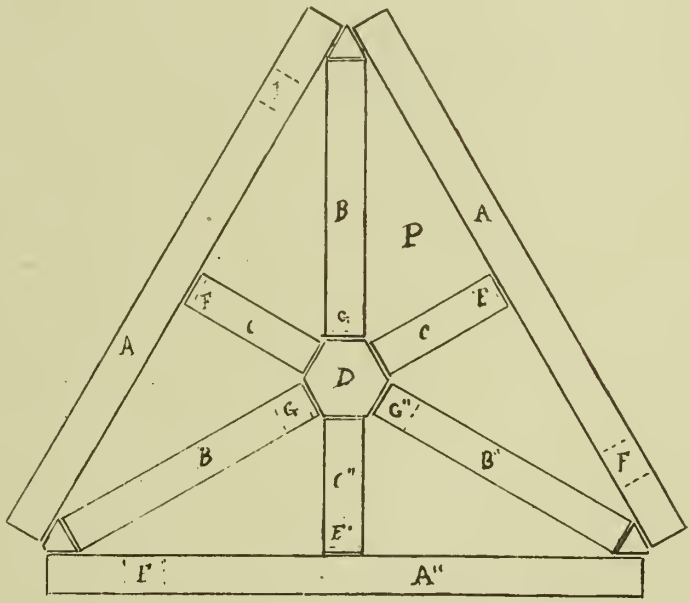

Inventor

Alfredo Varni

by

Young, Emery & Thompson

Published May 11, 1943

Serial No. 237,472

ALIEN PROPERTY CUSTODIAN

INJECTION INTERNAL COMBUSTION ENGINE ESPECIALLY FOR LIGHT FUELS WITH TIMED SPARK IGNITION

Hans Scherenberg, Stuttgart-Untertürkheim, Germany; vested in the Alien Property Custodian

Application filed October 28, 1938

This invention relates to an improvement in internal combustion engines with relatively low compression and plug ignition especially such which are working with light fuels. It has been found that a cause for the knocking is that even in the case of very thorough fuel diffusion and enrichment of the combustion air with fuel by a single injection nozzle a so-called poor mixture with low fuel content is present in the combustion chamber, chiefly in the zone lying in the injection shadow in proximity to the nozzle mouth. If the ignition is started on the sparking plug electrodes in the zone of the mixture rich in fuel, a pressure wave moves in advance of the combustion flame and causes the highly explosive mixture poorer in fuel to ignite prematurely. This initial ignition then causes an undesirable knocking with the known disagreeable results. The arrangement of two injection nozzles renders it unnecessary to sharply deflect the fuel jets towards the wall on which the nozzle is arranged. The arrangement of two nozzles in the above mentioned type of engine is more preferable than a single nozzle with a larger number of directed injection jets because the injection procedure takes place during the suction stroke, that is at a time of great turbulence as regards the movement of air and mixture in the cylinder.

Following the above knowledge the present invention consists in that several injection nozzles, that is at least two, are arranged in such a manner that their injection jets spread over the whole combustion chamber so that there is not produced at any point a zone with a poor fuel-air mixture. This is chiefly obtained by providing the nozzles in a certain distance from each other, preferably two nozzles being opposite to each other or nearly opposite to each other. Advantageously they are arranged in about the same height of the cylinder wall. Apart therefrom a more favourable combustion is attained by the more uniform enrichment of the compression air with fuel, resulting in that the internal combustion engine can be driven with an extraordinarily low fuel consumption for the same preformance. The saving in fuel is considerable.

The number of nozzles and sparking plugs is unlimited as such. Two nozzles and one sparking plug may also be provided. A particularly advantageous arrangement has been found to be the arrangement of two sparking plugs and of two nozzles so that a sparking plug and a nozzle are actually opposite one another on the suction and exhaust sides and a sparking plug and a nozzle are actually directly side by side. In this case— and also when using more plugs and nozzles— the sparking plugs are advantageously arranged in about the farest possible distance from each other. It is also advisable to actually arrange the plug on the one side opposite the injection nozzle on the other side in such a manner that the plug electrodes are directly impinged upon by the fuel jet of this nozzle. Other fuel jets of the injection nozzles are, however, distributed over the combustion chamber so that every combustion zone is uniformly supplied with fuel. If valves are present, fuel jets from both injection nozzles are directed also towards these valves which are cooled by the fuel evaporating on them.

The invention is especially useful in case of engines where the fuel is injected rather early, i. e. already during the suction stroke of the engine. This, because such engines offer special difficulties to obtain an uniform distribution of the fuel.

An embodiment of the invention is illustrated diagrammatically by way of example in the accompanying drawing, in which

Fig. 1 shows in longitudinal section an internal combustion engine cylinder equipped with an admission and an exhaust valve, two sparking plugs and two injection nozzles.

Fig. 2 is a cross-section through the cylinder shown in Fig. 1.

Fig. 3 is a lineal diagram for a four stroke cycle engine and

Fig. 4 is a lineal diagram for a two stroke cycle engine.

In Figs. 1 and 2 the cylinder space is designated by *a*, the injection nozzles by *b* and *b'* respectively, the sparking plugs by *c* and *c'* respectively, the admission valve by *d* and the exhaust valve by *e*. In the example chosen each injection nozzle is diametrically opposite another injection nozzle and the injection nozzles and sparking plugs on each side of the cylinder are arranged side by side (Fig. 2). Furthermore, a sparking plug is always opposite an injection nozzle in such a manner that the ignition electrodes of the plugs are directly impinged upon by a fuel jet, as indicated for example by the reference *f* in Fig. 1. Other fuel jets *g* of the injection nozzles are preferably directed towards the valves nearest the injection nozzles, on which valves the fuel evaporates and thus cools the valves. Yet other fuel jets are distributed over the combustion chamber so that the whole combustion chamber is uniformly supplied with fuel and, if desired, the piston is cooled by the fuel sprayed on and evaporating thereon. As Fig. 2

shows the two injection nozzles produce a close network of intersecting fuel jets, this excluding the formation of poor mixture zones detrimentally influencing the combustion process. The fuel jets according to the invention may intersect or meet. Particular care must be taken that the zones of the combustion chamber in proximity to the injection nozzle mouths are effectively enriched with fuel. By the double arrangement of the sparking plugs the ignition takes place simultaneously at two opposite plugs and the pressure waves from explosion meet above the piston in the middle of the combustion chamber. In this manner the piston is centrally stressed in a favourable manner. If there are two admission and exhaust valves, as indicated for example by the references *d*, *d'* and *e*, *e'* respectively in Fig. 2, it must be seen that all four valve bodies are impinged on by cooling fuel jets.

The internal combustion engine is preferably driven in such a manner that the injection takes place still during the suction stroke, just about the closing, i. e. before the end, at the end or more or less after the end of the closing of the exhaust port, the admission and exhaust times preferably overlapping considerably for example by a crank angle of 40 to 140°. It is furthermore advantageous to drive the engine in such a way that the fuel is injected by so-called closed injection nozzles in such a manner that the fuel jets either cross or intersect (i. e. have to a certain extent a common plane when seen from above) and particularly an enrichment takes place in the fuel zones in proximity to the nozzles.

Fig. 3 shows the diagram of a four stroke cycle. The line X—X corresponds to two complete rotations of the crank shaft, comprising the working stroke I, scavenging stroke II, suction stroke III and compression stroke IV. To designates the upper and T*u* the lower dead centre position of the working piston. A' designates the opening and A'' the closing of the exhaust. E' designates the opening and E'' the closing of the admission. The ignition takes place at Z by the jumping over spark.

As can be seen from Fig. 3 the exhaust and admission periods overlap in the region *x* of the upper dead centre position between the scavenging stroke II and the suction stroke III. At the moment the exhaust port is closed at A'' the injection proceeding *b* commences at S' and terminates for example at S''. A good scavenging effect is attained by the large overlap *x*. Loss of fuel is impossible on account of the late injection. The injection proceeding can also commence later and terminate earlier or later than indicated in Fig. 3. The limit of commencement of the injection exists when the injection proceeding takes place directly before the closing of the exhaust port. The extent to which this is possible without loss of fuel is dependent upon the type of scavenging process used or upon the path along which the injected fuel particles are carried along by the scavenging air from the inlection nozzle to the exhaust port. The important point is, that the fuel can no longer enter the exhaust through the open exhaust port.

Fig. 4 shows the diagram of a two stroke cycle engine. In this construction the line X—X represents one rotation of the crank shaft and the exhaust and admission times A', A'', E', E'' are controlled symmetrically to the lower dead centre position T*u* between expansion stroke I and compression stroke II, for example by the piston. The fuel injection S'—S'' also takes place after the closure of the exhaust port and the ignition occurs at Z.

Special circumstances may make it appear advisable to arrange the fuel injection nozzle, inclined preferably downwardly, relative to the cylinder axis. The best arrangement has been found to be that in which the fuel injection nozzle arranged on the suction side of the cylinder forms an angle of about 20° with the cylinder axis, whereas for the injection nozzle located on the exhaust side an angle between 15 and 45° may be chosen. An inclination of 45° has been found particularly favourable. The nozzle mouths should preferably according to the invention be protected against the high explosion pressure and the hot explosion flame, so as to always maintain the injection diagram of the nozzles as uniform as possible. This is effected in a simple manner in that the nozzle mouths are arranged so deeply as possible below the upper piston dead centre position that the piston covers the nozzle mouths at the moment of ignition.

HANS SCHERENBERG.

PUBLISHED

MAY 11, 1943.

BY A. P. C.

H. SCHERENBERG

INJECTION INTERNAL COMBUSTION ENGINE ESPECIALLY FOR LIGHT FUELS WITH TIMED SPARK IGNITION

Filed Oct. 28, 1938

Serial No. 237,472

Fig. 1.

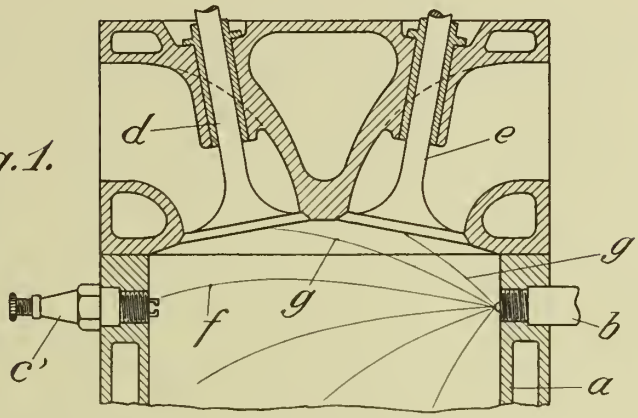

Fig. 2.

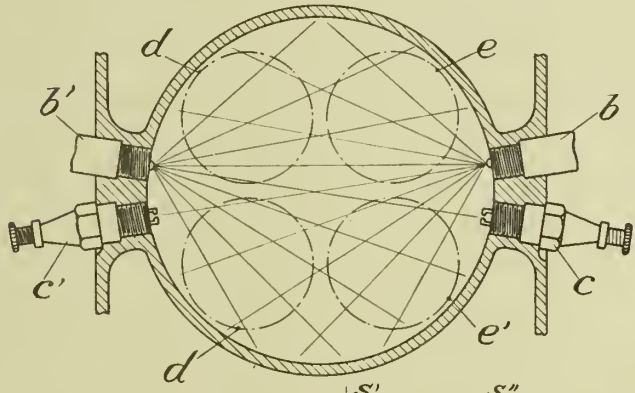

Fig. 3.

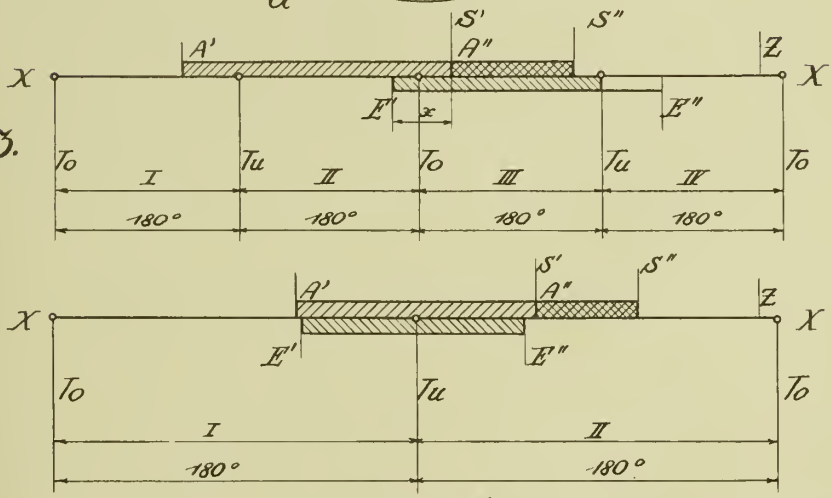

Fig. 4.

Inventor:

HANS SCHERENBERG

BY Haseltine, Lake & Co.

Attorneys

Published May 11, 1943

Serial No. 239,352

ALIEN PROPERTY CUSTODIAN

HYDRAULIC POWER TRANSMISSION UNIT

Erwin Sturm, Boll bei Goppingen, Germany;
vested in the Alien Property Custodian

Application filed November 7, 1938

My invention relates to hydraulic power transmission units, including pump and motor units, and more particularly to units of that type in which a piston drum equipped with vanes is surrounded by a housing, and the housing is arranged to rotate freely, for the purpose of reducing the hydraulic losses, and to be adjusted eccentrically with respect to the drum, for the purpose of gradual velocity regulation.

It has been found that in units of this type the fit of the outer edges of the vanes against the inner wall of the housing is not uniform throughout the circular movement of the vanes through the housing. From the apex, i. e., the point where the extension of the eccentricity between the drum and the housing intersects the inner wall of the housing, the fit becomes gradually poorer and at 90 degs. from the apex there is a gap between the outer edge of each vane and the inner wall of the housing. The gaps at the individual vanes are quite small but they produce losses which must be avoided under all conditions. The difficulty of obtaining a proper fit is particularly serious under the up-to-date exigencies of high speed and high hydraulic pressures, in conjunction with the requirements of exchangeability of parts, and of low manufacturing cost. The present methods of making the vanes, and of guiding them, do not constitute satisfactory solutions of the problem.

I have found—and this had not been recognized before—that the problem must be solved by the combination of several features, part of which are old in this art.

To this end, I provide, in combination with the drum and the housing, as described, and annular supporting means, or spigots, in the housing, for the inner edges of the vanes to abut against, a strip arranged to turn in the outer edge of each vane and having a surface adapted to slide on, and to make a tight fit with, the inner wall of the housing, and a similar strip in the inner end of each vane, having a surface adapted to slide on the annular supporting means, or spigots. Not less than one spring for each vane is abutted against the strip in the inner edge of the vane with one end, so as to force the strip in the outer edge of the vane against the inner wall of the housing with its other end.

The strips in the inner and outer edges of each vane are segmental in cross-section, and, since they are free to turn in their seats in the vane edges, the faces of the strips in the outer edge are always in contact with the inner wall of the housing, whatever may be the angular position of the corresponding vane, and so gap loss and back pressure against the vanes are eliminated.

The segmental strips are one of the features of my invention. Another feature is the—not less than one—spring for each vane which holds the corresponding strip in its outer edge against the inner wall of the housing and effects a perfect seal in all positions of the vane. A third and very important feature of my combination is the rotary housing which revolves with the vanes. It has been found that with fixed housings the wear of the housing and the vanes is excessive while with a rotary housing the relative movement of the vanes and the housing is very small and there is practically no wear between the parts in contact. The distance for which the vane springs are expanded or compressed, is also very small with this arrangement, and so the springs are not subjected to fatigue and failure.

To facilitate the building-in of the vanes, I preferably arrange in the housing an annular abutment, preferably a pair of rings adjacent the inner sides of the circular supporting means, or spigots, having an outside diameter which is substantially equal to the outside diameter of the supporting means, or spigots. This annular abutment forces the strips in the inner edges of the vanes to the outer side so far that the end plates of the housing, with their spigots, can be inserted without difficulty.

I may also dispense with the annular abutment, or spigots, altogether, and place the annular abutment, or rings, partly into recesses in the inner faces of the side plates, so that the strips in the inner ends of the vanes bear on their exposed portions, or I may place the rings flat against the plane inner faces of the side plates with their outer sides.

In the accompanying drawing, a pump unit embodying my invention is illustrated by way of example.

In the drawing

Fig. 1 is a diagram showing the drum and the housing of the unit.

Fig. 2 is a section of the unit on the line II—II in Fig. 3.

Fig. 3 is a section on the line III—III in Fig. 2.

Figs. 4 and 5 are part sections on the plane of the line II—II in Fig. 3, drawn to a larger scale and showing, respectively, a ring inserted in, and placed flat against, one of the housing's end plates.

Referring now to the drawing, and first to Figs. 2 and 3, the casing of the pump unit com-

prises a pair of end plates 1 and 1'', a barrel 1', and a base or sump 1'''. The motor unit, not shown, is arranged at the right-hand side of the dot-and-dash line in Fig. 2. A drum which comprises a sleeve 2 and an annular member 2', with slots therein for vanes 12, is mounted in ball bearings 3 for rotation about a central control valve 4, with an inlet passage 14, and an outlet passage 15. Radial passages 13 are formed in the drum 2, 2' for connection with the passages 14 and 15 in the valve 4. The sleeve 2 of the drum is driven by a shaft 5 projecting from the casing 1.

The drum 2, 2' is enclosed in a housing which comprises a pair of end plates 7, 7' and a barrel 6 which is connected to the end plates by screw bolts 11. The end plates have each an inwardly projecting circular supporting member, or spigot, 18 and 18', respectively, projecting from their inner, and seating sleeves for ball bearings 9 projecting from their outer faces. The ball bearings 9 are inserted in the side shields 10 and 10' of a frame 10, so that the housing 6, 7, 7' is free to rotate in the frame 10, which has the advantages set out above. Means such as a hand wheel 21 mounted to rotate in the casing, a threaded portion 22 on the shaft of the hand wheel, a threaded sleeve 23 on the frame 10, and an adjustable abutment 24, are provided for adjusting the frame 10 and the housing 6 which the frame supports, with respect to the axis of the drum 2, 2'.

Figs. 1 and 3 show the drum 2 and the housing 6 in that position in which the eccentricity, that is, the distance of the housing axis C' and the drum axis C, is a maximum. The housing and the drum define a crescent-shaped pressure chamber 8. It will appear from Fig. 1 that a vane *a—b* makes a proper fit with the inner wall of the housing 6 only at the apex *a*, that is, at the point where the extension of the eccentricity C—C' intersects the inner wall of the housing 6. The same is obviously true for the diametrally opposite point. When the drum rotates anti-clockwise, the fit of the outer vane edge against the inner wall of the housing 6 is gradually deteriorated on account of the eccentricity. This is worst when the vane has moved through an angle of 90 degs. In order to be in the proper radial position with respect to the housing 6 at this point, the vane ought to occupy the position *a'—b'*—C', while in fact the drum 2, 2' compels it to occupy the non-radial position *a'—c*—C'. The difference between the lengths of the two lines produces a gap which is equal to such difference. Not withstanding the smallness of such gap, it should not be present, for the reasons stated.

This difficulty is eliminated by the movable strips 16 and 17 at the inner and outer ends, respectively, of each vane. The ends of the vane are grooved to form semi-cylinders for the reception of the strips which have segmental cross-section and project slightly from the grooves in which they are mounted to turn at the ends of the vanes. The flattened outer sides of the strips 16 at the outer ends of the vanes abut against the inner wall of the housing 6, and the corresponding faces of the strips 17 at the inner ends of the vanes are supported by the spigots 18 and 18' on the side plates 7 and 7' of the housing. Springs 19 are inserted in bores in the vanes 12, with their inner ends bearing against the strips 17, and with their outer ends tending to force the strips 16 against the inner wall of the housing 6. The springs make up for small irregularities in the housing and the spigots, and hold the strips 16 against the inner wall of the housing 6 in all positions. The strips 16, being mounted to turn in the outer ends of the vanes 12, together with the springs 19, equalize the difference between the lines *a'—b'* C' and *a—c*—C and prevent the formation of gaps, with the losses involved thereby. The tight fit is facilitated by the fact that the housing 6, 7, 7' rotates with the drum and so the relative displacement of contacting surfaces is a minimum.

In order to facilitate the assembling of the unit, I provide an annular abutment for the inner strips 17 which is here shown as a pair of rings 20 each of which is abutted against one of the spigots 18, 18' with its outer side. The outside diameter of the rings 20 is substantially equal to the outside of the spigots 18, 18' but slightly greater so that the rings force the strips 17 away from the axis of the drum, and their ends do not interfere with the insertion of the spigots 18, 18' of the end plates 7 and 7'.

Referring now to Fig. 4, the spigots 18 and 18' may be dispensed with altogether, and the end plates 7 and 7' recessed for the reception of the rings 20, as shown for the end plate 7 at the left. The rings make a loose fit in the end plates and the strips 17 bear on the inwardly projecting portions of the rings.

Referring now to Fig. 5, the inner surfaces of the end plates 7 and 7' may be plane and the rings 20 abutted against the surfaces with their outer sides. This is again illustrated only for the end plate 7 at the left. This arrangement has the advantages that the rings 20 rotate with the vanes 12, to the extraordinary reduction of friction and wear on the rings and the strips, and that the end plates 7, 7', being without spigots or recesses, are easier to machine.

ERWIN STURM.

PUBLISHED

MAY 11, 1943.

BY A. P. C.

E. STURM

HYDRAULIC POWER TRANSMISSION UNIT

Filed Nov. 7, 1938

Serial No. 239,352

FIG. 2.

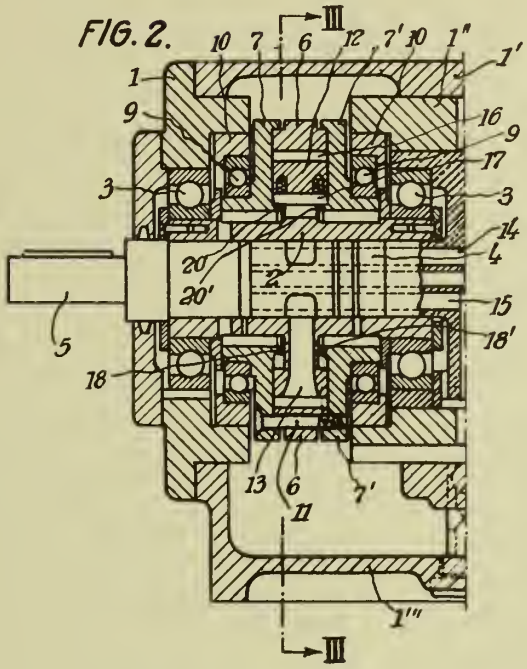

FIG. 1.

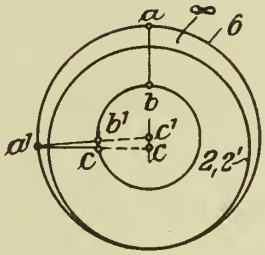

FIG. 4.

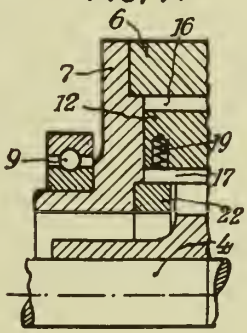

FIG. 3.

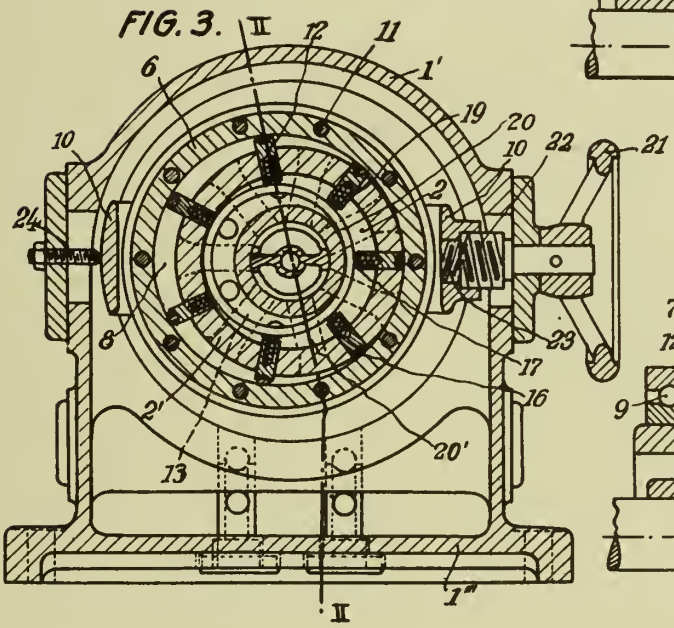

FIG. 5.

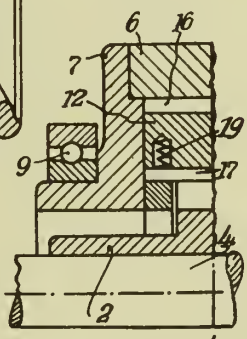

Inventor,
E. Sturm

By: Glascock Downing & Seebold
Attorneys.

Published May 11, 1943

Serial No. 240,418

ALIEN PROPERTY CUSTODIAN

POROUS BUILDING ELEMENT

Carl Fabritz, Konigsberg, Preussen, Germany; vested in the Alien Property Custodian

No Drawing. Application filed November 14, 1938

My invention relates to porous building elements of that class in which a skeleton of grains is formed, and the grains are coated with, and connected by, a binder. Such elements are produced by mixing the binder with a quantity of water which is just sufficient for making the binder coat and connect the grains of the skeleton, but not for embedding the grains in the binder, for in this case the element would lack porosity.

By way of example, filter bodies are made in this manner by mixing concrete with the aforesaid low percentage of water.

It is an object of my invention to provide a wider range of usefulness for such porous elements by making them mechanically stronger, and at the same time more resistant to corrosion, atmospheric and other detrimental influences, than the filter bodies or other elements produced heretofore.

To this end, I impregnate the porous mixture of grains and binder which constitutes the element aforesaid, with a plastic protective substance by which the pores, or interstices in the skeleton, are filled, and a solid element is produced.

A "plastic protective substance" is one which is liquid in one condition, so that it readily penetrates into the pores of the element, and solid in the other condition, so that it braces the element and protects it against chemical action.

Such a substance is tar.

The element according to my invention can be used for a great variety of purposes. It may be spread on a road or street as a covering, or molded into paving stones, curb stones or the like, or insulating slabs or plates, drain pipes, and many other objects. It may also be combined with bodies of other materials, for instance, attached to a slab of stone or concrete to which its binder sticks firmly, or sandwiched between two slabs as an insulating layer.

When it is desired to use the element according to my invention as a road bed, a porous mixture, for instance, of sand and cement, or of some other material, such as ballast, crushed fireclay, or the like, and some other binder, such as waterglass or the like, with or without a froth-forming agent, for instance, soap, is spread on the moistened road bed of ballast, concrete, or the like. The mixture is allowed to set and is then impregnated with a plastic protective substance, preferably coal tar, in liquid condition. The tar flows into the pores of the mixture by gravity, or it may be forced into them by pressure or suction.

A road covering of this kind is vastly superior to the usual coverings, and particular to the coverings of split and tar. When such coverings are heated by the sun, the tar becomes plastic or even liquid and rises to the surface of the covering which becomes soft and is rapidly worn to destruction. In a covering made according to my invention, on the other hand, the tar, being uniformly distributed in the pores of the mixture, is restrained even in hot weather, and the covering remains firm and elastic. Another advantage is that the binder in the element, usually cement, adheres firmly to the bed and prevents the formation of cavities which are so detrimental in road coverings of the old type.

CARL FABRITZ.

Published May 11, 1943

Serial No. 241,833

ALIEN PROPERTY CUSTODIAN

DISHWASHING MACHINES, PRIMARILY FOR HOUSEHOLD USE

Jørgen Hertz, Copenhagen, Denmark; vested in the Alien Property Custodian

Application filed November 22, 1938

Dishwashing machines intended primarily for household use are known in which the utensils are squirted with water or cleansing fluid, for example lye, through liquid discharge openings, for example jet nozzles. These machines contain at the bottom a receptacle which is filled with cleansing fluid which by means of a pump is pressed out through a system of cleansing fluid nozzles, causing the cleansing fluid to circulate in the machine. In order to avoid clogging of the nozzles one or more filters are fitted in the receptacle and before the pump, these retaining larger impurities. Seeing that the pump is normally driven by an electric motor, there is no complication attached to letting a comparatively large quantity of cleansing fluid, for example a couple of hundred litres per minute circulate in the machine during the treatment of the utensils with cleansing fluid, for example lye. After having treated with cleansing fluid, the utensils are squirted with pure water which may be supplied either direct from a water main or may be made to circulate by means of the pump. The squirting with water usually takes place through other nozzles than those serving for the squirting with cleansing fluid and either or both nozzle systems may be movable.

Dishwashing machines of the aforesaid kind suffer from several drawbacks, especially, due to their using the same circulating cleansing fluid. It is not of advantage in the same batch of utensils to cleanse plates and glasses, the glasses becoming unnecessarily soiled by the fatty substances and similar deriving from the plates; furthermore, it is unhygienic to use the same circulating cleansing fluid. To this should be added that even the employment of filters in front of the pump is not always sufficient to prevent clogging of the nozzles. It is, further, difficult constantly to maintain the circulating cleansing fluid heated to approximately the same temperature unless a special heating device is built into the receptacle. The said drawbacks in connection with the circumstance that the running of the machine necessitates for example an electric motor for driving the pump, do in a large number of cases make the said washing machines unsuitbale for household use.

Dishwashing machines are further known to be constructed without any pump and in such a manner that water from the house water main and through the pressure in the main is squirted out through the machine's nozzles. By such machines it is known to add a cleansing agent to the water during a certain period so that the nozzles in the beginning squirt cleansing fluid under the water main pressure and then, in a subsequent period, squirt rinsing water, that is water to which no cleansing agent has been added on its way from the water main to the squirting nozzle or nozzles. Such machines are intended for dealing with small quantities of utensils and in order to utilize the low water pressure fully it is usual that either the squirt nozzle or the utensils are made to rotate so that the latter may be squirted from different sides. The low pressure makes it necessary further to employ a single or a very small number of squirt openings in order that a powerful mechanical rinsing with water or cleansing fluid, or both, may be obtained and the water quantity drawn per minute from the water main can only be very limited, 10–15 litres per minute at the most.

Such machines built with a single rotating nozzle do not function satisfactorily. It has been attempted to obtain an improved effect by constructing the machine with a rotatable frame for the utensils and with two nozzle pipes arranged inclined towards one another, only one of these functioning at a time. The nozzle in action squirts liquid obliquely against plates arranged radially on a carrying frame rotatable on a vertical axle, making the frame and the plates rotate whilst the latter are being squirted on the one side. When the carrying frame and the plates have rotated a certain number of revolutions, an adjustment organ on the carrying frame effects a turning of a cock inserted between the water supply pipe and the two said nozzle pipes. The liquid supply is thereby switched on to the other nozzle pipe which squirts the plates on the other side, bringing the carrying frame in rotation in a direction opposite to the first direction until—following a certain number of revolutions—the first nozzle pipe again receives water supply. Besides the said periodically active nozzle pipes or squirt openings, the described machine is provided with a water supply pipe which is constantly in action and which at the bottom of the machine debouches in a number of squirt openings or nozzles which may be covered by upturned glasses which will thus constantly be squirted inside, the outside being dealt with by the liquid squirted through one of the two periodically active nozzle pipes and thrown back, either by the plates on the carrying frame or by the plates in conjunction with the inner wall of the machine chamber.

The above described machine suffers especially from the drawback that it will only function

when there are many plates in the carrying frame, to which must be added that the cleansing effect is reduced in that the nozzle pipes must be generally inclined in order that the liquid jets may produce the rotation. Still, the principal failing attached to the machine lies in the fact that it comprises only two periodically active nozzle pipes or squirt openings, this entailing that only small areas of the plates on the carrying frame are powerfully squirted with a powerful mechanical rinsing effect, whereas the other portions will, practically speaking, not be subject to any direct mechanical squirting action by liquid jets, their treatment being limited to the effect of downwardly flowing liquid or liquid particles thrown back, these combining to form a vapour of water drops without any proper mechanical rinsing effect. The described machine, therefore, does not yield any satisfactory cleansing of the utensils.

This invention relates to a dishwashing machine constructed primarily for household use and of that kind which has one or several liquid discharge openings, nozzles or groups of such through which cleansing fluid or rinsing water is discharged periodically under the pressure from a house water main and through the intervention of control means, in such a manner that the machine comprises in any case certain nozzles or nozzle groups which are periodically brought into action mutually, and what in the first place characterises the invention is the feature that the control means which bring about the periodical liquid supply to the said nozzles or nozzle groups are actuated by such means that the durations of the periods of squirting, which periods need not be of equal duration, is regulated independently of whether utensils are inserted in the machine or not. The control means employed according to the invention are, in other words, independently movable and may be driven, for example by means of a weight lifted in advance, by a driving spring or other separate driving means similar to a clock or watch, or by other driving means, for example a small electromagnetic motor device or, possibly, a driving device operating with compressed air or water pressure and constructed, for example in the form of a small turbine. The simplest way is to employ a driving spring or a small water turbine driven by water from the house water main, which will not materially reduce the pressure in the latter. The nature proper of the control means, or the power by which they are actuated have no bearing upon the main principle of the invention, the same being based exclusively on the feature that the movement of the control means takes place wholly independently of the utensils being dealt with in the machine.

The invention makes it possible to determine the directions in which the jets are to be ejected from the nozzles, considering solely the attainment of the greatest possible mechanical rinsing effect (detaching effect by jet action).

Seeing that in any case certain of the machine's nozzles are periodically in action mutually, the said nozzles are, according to the invention, disposed and adjusted in such a manner that each of them oversquirt will full mechanical rinsing effect only a portion of the machine's chamber holding the utensils, but still in such a manner that the periodically active nozzles do collectively and with full mechanical rinsing effect command either the whole of the said chamber or larger portions of the same, for example, a vertical middle section through the chamber, extending only to the chamber's middle axis.

It is primarily only the rinsing water which is ejected through nozzles of which in any case certain are periodically in action mutually, and if the rinsing water nozzles command the whole of the machine's chamber for utensils, then the machine may be constructed with a fixed carrying frame for the utensils. If the rinsing water nozzles collectively command only a cross section through the machine, or only the one half of such a section, the machine is constructed with a rotating carrying frame for the utensils, this passing during the rotation through that zone in the machine which is commanded by the nozzles with full mechanical rinsing effect. The aforesaid zone need not constitute an integral surface.

Generally, the said mutually periodically active nozzles will be employed, possibly such nozzles in conjunction with one or more constantly active nozzles intended solely for the squirting of the utensils with rinsing water, whereas for the squirting of the utensils with cleansing fluid constantly active nozzles are primarily employed. There is, however, nothing to prevent the employment of nozzles, all of which or some of which are periodically active mutually, for the ejection of cleansing fluid also.

The squirting with cleansing fluid is usually effected prior to the squirting with water, and for the squirting of the utensils with cleansing fluid a special system of nozzles is used, this discharging finer jets seeing that the squirting of the utensils with cleansing fluid shall serve, in a major degree, as a kind of maceration of the impurities on the utensils.

As explained, the machine is of the kind, whose nozzles for rinsing water or cleansing fluid eject through the pressure from a house water main. The cleansing agent must therefore be introduced at a place in the pipe or pipes which connect the house water main with the nozzle or nozzles which are intended for the ejection of cleansing fluid. This is effected in that a supply device for a cleansing agent, for example soap in solid or fluid form is in a per se known manner inserted in the said pipe or pipes.

Normally, the machine according to the invention is constructed so as to comprise both cleansing fluid nozzles and rinsing water nozzles.

The drawings show what is needful for the comprehension of the invention.

Fig. 1 shows schematically a partially vertical middle section on the line C—D in Fig. 2 through a constructional form for a dishwashing machine according to the invention.

Fig. 2 schematically, a horizontal cross section through the same,

Fig. 3 schematically, a partially vertical middle section through a constructional form for the control means for the liquid,

Fig. 4 is a horizontal section on the line A—B in Fig. 3, and

Fig. 5 a detail.

Fig. 6 shows schematically a vertical middle section through a modified constructional form of the dishwashing machine according to the invention.

In Figs. 1 and 2 the machine's washing space or chamber is marked 1, the same resting at the lowermost end on a bottom 2 which contains a drain 3 for the liquid flowing away from the chamber 1. The chamber 1 contains a carrying frame 4 or other suitable support device for the utensils, and it is, particularly in Fig. 1, indicated

by what manner plates, cups, glasses and similar may be arranged on the carrying frame 4, whereas spoons, forks and similar may be suspended in holders 5 forming portions of the carrying frame 4.

In the constructional form shown the carrying frame is movably lodged in that it is affixed on a vertical axle 6 which may be made to rotate in a manner and by means which will be particularly described below. Inside the chamber 1 there is found, besides the carrying frame, a tube or a cylinder 7 enclosing a plunger 8 movable therein. These parts are shown in section in Figs. 3 and 4. The plunger 8 consists of a top part 9 which is turnably connected to a bottom part 10, and a channel or flow passage 11 extends through both the top part and the bottom part, the passage being at the top connected to the water main through the pipe 12. The passage 11 terminates at the bottom, in order to avoid side pressure on the plunger, in the constructional form shown, in a cross passage 13 debouching on both sides of the plunger. In the lowermost portion of the tube or cylinder 7, for example in its bottom, is disposed a larger inlet 14 fitted with a non-return valve through which inlet liquid, for example water, may be sucked in from a container or basin 50 when the plunger is moved upwardly.

There is found, further—for instance in the cylinder bottom—a fine opening 15 through which the liquid sucked in will only be able to flow away very slowly during the plunger's downward travel so that this movement will be slow and uniform. In the side wall of the cylinder 5 are disposed, as shown by Fig. 3, a number of ports 16 arranged vertically in series which ports will correspond with the cross passage 13 during the downward travel of the piston and which ports 16 will through pipes 17 (Figs. 2 and 3) direct the liquid supplied from the water main each to its own group of nozzles which latter, as shown by Fig. 2, may comprise one or several liquid discharge openings or nozzles 18. These nozzles command, individually or in groups, only a limited portion of the dishwashing chamber 1 or rather of the space occupied by utensils carrying frame. It is indicated in Fig. 4 how side pressure on the cylinder may be neutralised through the arrangement of ports 19 oppositely to the ports 16, the former having outlet connections to the pipes 17 through a connecting pipe 20.

On the top part 9 of the plunger is disposed an upwardly extending plunger rod 21 which, as seen from Figs. 1 and 5, is turnably connected with a connecting rod 22 whose top end by means of a pin 23 is attached to a turnable tooth sector 24. The latter is arranged turnably on an axle 25 and carries at the top a lever 26 with a displaceable weight 27. The tooth sector 24 engages with a gear wheel 28 (Fig. 5) arranged on a boss common with another gear wheel 29 (Fig. 1). From the gear wheel 29 the carrying frame's axle 6 is rotated through a suitable transmission.

Fig. 3 shows that the plunger's bottom part 10 is turnably connected with the top part 9 so that the plunger's bottom portion and therewith the passage 11 with the cross passage 13 may be turned in relation to the cylinder, for example through manipulation of the handle 30. If the plunger bottom part 10 is turned, for example 90°, the passage 13 (Fig. 4) will break contact with the ports 16 and 19 and assume such a position that it will, during the travel of the plunger, correspond with a series of ports of which only one, 31, is visible in Fig. 4. These ports 31 may through pipes 32 direct the liquid supplied through the plunger passage 11 into a nozzle system other than the nozzles 18 shown in Fig. 2. The latter system of liquid discharge openings or nozzles may be utilized for squirting the utensils with cleansing fluid, for example lye.

The individual pipes 32 must be presumed to be provided with a per se known cleansing agent supply, or a cleansing agent supply device must be inserted on the pipe 12, Fig. 3, in which case the supply device must be arranged so as to admit of being disconnected from the pipe 12 by means of a valve.

If the plunger be supposed stationary in the position of turning as shown in Fig. 3 and at the same time lifted to such an elevation that the cross passage 13 lies higher than the topmost of the ports 16, then the plunger will, as it travels downwardly, establish connection between the cross passage 11 and the ports 16 in downward sequence so that liquid will only be admitted to one of the pipes 17 at a time, thereby admitting liquid only to one single group of the nozzle groups shown in Fig. 2. There is per se nothing to prevent the plunger from feeding for example two or several nozzle groups simultaneously during its downward travel. This will be possible by furnishing the plunger with several cross channels 13, for example as indicated in Fig. 3 by broken lines, by a further cross channel 33, or by giving the cross channel 13 a correspondingly greater height.

The machine functions in the following manner:

When the utensils are arranged on the carrying frame 4 the doors or similar through which the frame was inserted into the chamber 1 are closed. Then the plunger 8 is turned by means of the handle 30 so that the cross passage 13 is brought on to the same plane as the ports 31 (Fig. 4) whence the plunger will be found adjusted for the admission of cleansing fluid, e. g. lye, to the nozzle or nozzles through which the utensils shall be squirted with cleansing fluid. The tooth sector 24 with the weight 27 is then lifted to the topmost position shown in Figs. 1 and 5, and seeing that a pawl and ratchet mechanism is normally introduced between the gear wheel 29 and the carrying frame's axle 6, the tooth sector and the weight and therewith the plunger 8 may be brought into the topmost position without rotation of the utensils. During the elevation of the plunger, liquid—for example water—will be sucked in through the inlet 14 from the basin 50 (Figs. 1 and 3). The water supply is then opened from the water main to the pipe 12 but there will not as yet be any flow through the passage 11 and the cross passage 13, seeing that the latter is occupying a position above that of the topmost of the ports 31 in the cylinder 7, assuming that there are several ports 31. The plunger will then commence to travel downwards under the influence of the weight 27 and simultaneously the carrying frame and the utensils will be set in rotation. As soon as the cross passage 13 reaches the position opposite to the port 31 or the topmost of these, water will be directed through the corresponding pipe 32 and seeing that this pipe or a shunt on same contains a cartridge or container with a cleansing agent soluble in water, the water will take up a portion of the same before being discharged as cleansing fluid through one or more liquid discharge openings or nozzles in the chamber 1.

If the cylinder 7 contains several ports 31 arranged vertically in series with corresponding pipes for cartridges or containers containing cleansing agents and terminating in one or several nozzles, the utensils may be treated with several cleansing fluids introduced in sequence, for example first an alkaline, then an acid and finally with a cleansing fluid which loosens any "fur" deposits, which latter process is of particular importance where the water is calcareous. When the cross channel 13 has passed the port or ports 31, the utensils will have been treated with cleansing fluid and the bottom part 10 of the plunger is then turned to the position shown in Fig. 3 whence the plunger—possibly, though not necessarily, in conjunction with the closing of the water supply—is lifted again and left to resume its downward travel so that the cross passage 13 will now in turn pass the ports 16 (Fig. 3) and thus through the pipes 17 admit water to the nozzle groups coming into action in sequence. When the plunger has passed the lowermost of the ports 16, all the groups will have functioned and the rinsing be completed.

Both during the treatment with cleansing fluid as well as during the rinsing with water, the utensils will be subject to rotation and the velocity of rotation may with advantage be adjusted so as to maintain a fixed relation to the movement of the plunger or the other control organs which may be used for the control of the liquid supply to the nozzle groups, for example in such a manner that one or two revolutions of the axle 6 corresponds to one passage of the cross passage 13 from one of the ports 16 or 31 to the following.

Both the liquid control and the rotation of the utensils may be obtained by other means than those explained, for instance electrically, hydraulically or pneumatically.

For the liquid control, the plunger 8 with the supply pipe 12, shown in Figs. 1 and 3 may be substituted by a hollow plunger as shown in Fig. 6. In the constructional form for the dishwashing machine shown in this figure the principal parts are denoted by the same reference designations as those used in Fig. 1. The plunger 8 is a hollow plunger to whose inner cavity 120 liquid is introduced through a fixed vertical pipe 119 whose lower end is passed through the top wall of the plunger. The plunger 8, Fig. 6, is employed in a manner similar to that shown in Figs. 1 and 3 to control the water supply to the periodically active rinsing water nozzles 124 whereas the machine's cleansing fluid nozzles 129 are fed from a water supply pipe 127, which through a cock 116, 146 may be connected to the water pipe 114. In the said water supply pipe 127 a cleansing agent supply 128 is inserted. In the constructional form for the machine shown in Fig. 6 the plunger 8 does not control the water supply to the cleansing agent nozzles 129, but is employed to determine the duration of the period during which the machine is to treat the utensils with cleansing fluid. The machine according to Fig. 6 is operated in the following manner: When the plunger is stationary in its lowermost position, the control cock 116 is adjusted in such a manner that water is passed through the pipe 125 to the space 113 below the plunger. Through this water pressure the plunger 8 is moved upwardly, applying at the same time tension to a depression spring 170. When the plunger 8 has been lifted, the control cock 116 is adjusted so that the water from the water main flows to the pipe 127 furnished with a cleansing agent supply 128, this pipe terminating in the cleansing fluid nozzles 129.

These latter will function whilst the plunger 8 moves downwardly, driven by the depression spring 170 which also has the effect of making the carrying frame 4, 6 for the utensils rotate. At the termination of the plunger's downwardly movement an arm 135, which is fixedly connected to the plunger 8, acts through the push rod 136 on the control cock 115, 146, causing it to be turned in such a manner that the water supply to the cleansing fluid nozzles is interrupted. The cock 116 is then adjusted so that water is introduced below the plunger, lifting the latter whilst the depression spring is being tensioned. When the plunger has been lifted, the control cock 116 is adjusted so as to pass water to the pipe 119. The plunger moves downwardly, driven by the spring 170, water being all the while passed to the cavity 120 in the plunger. During the plunger's downwardly movement, its water outlet 118 passes the inlets to the pipes 123 terminating in the rinsing water nozzles 124 so that these in turn come into action whilst the utensils rotate. When the plunger approaches the lowermost position the arm 135 causes such a turning of the cock 116, 146 that the water supply to the rinsing water nozzles is interrupted.

As explained in the foregoing, the plunger may be driven in a downwardly direction by means of a spring to which tension is applied during the upwardly travel of the plunger, hence this driving device replaces the weight 27 in Fig. 5.

The rotation of the utensils need not take place in conjunction with the means, for example the said spring 170 or the weight 27, effecting the liquid control. Thus the utensils may for example with advantage be rotated by a water jet acting on a bucket wheel on the axle 6, that is by a small turbine device fed direct from the water main without materially reducing the pressure in the same.

It is not necessary that both the nozzle systems for cleansing fluid and for rinsing water be divided into groups which are fed only at a time, thus in one of the systems nozzles may be used which are all in action simultaneously, or a single nozzle only. The constructional form for the machine as shown on the drawings operates with a movable plunger and a fixed cylinder, but the opposite is also possible; in the same way it is per se not at all necessary to control the liquid supply automatically, seeing that the control, especially in the case of machines with few nozzle groups, e. g. a single nozzle group or nozzle for the cleansing fluid, may be effected by hand.

The control of the water supply to the periodically acting nozzles may be effected in numerous different ways. Valves may be inserted in the pipes serving the individual nozzles, these valves being opened one or more at a time by means of a motor or a corresponding driving device, for example through a rotating cam shaft in a manner similar to that of the valves in an automobile engine. In place of a vertically actuated control plunger as the example shown in figs. 1, 3 and 6, a rotable valve or rotable ported slide valve functioning in a similar manner may be employed, driven by means of a spring, a weight or by a motor of any kind, for example a water turbine. In place of a movable plunger, a fixed plunger may be employed, the cylinder 7 being moved in relation to same, this applying whether the relative movement be vertical or rotating. The downwardly movement of the plunger may

be due to applied forces or to the plunger's own weight, the same applying to the cylinder, if the latter represents the movable part. If desired, both the plunger and the cylinder may be movable.

The constructional forms for the liquid control means shown on the drawings represent only a few examples of construction serving to elucidate the principle of the invention, namely that the control means are actuated independently of the quantity and nature of the utensils which may be found in the machine. As said, it will frequently be preferred only to use the plunger as control means for the rinsing water, in which case the water which is to be mixed with a cleansing agent is directed so as to pass round the plunger or the corresponding slide valve or turning valve.

In the case described it is possible in the manner explained to let the plunger control the closing and, in part, also the opening of a liquid control cock for the cleansing fluid pipe and in such a manner that the control cock is opened when the plunger is lifted, and closed when the plunger reaches its lowermost position.

In connection with the outflow opening 15, fig. 3, a regulating valve may be fitted so that the outflow velocity, and consequently the speed of the plunger's downwardly travel, may be regulated as desired.

JØRGEN HERTZ.

PUBLISHED

MAY 11, 1943.

BY A. P. C.

J. HERTZ
DISHWASHING MACHINES, PRIMARILY
FOR HOUSEHOLD USE
Filed Nov. 22, 1938

Serial No.
241,833

3 Sheets-Sheet 1

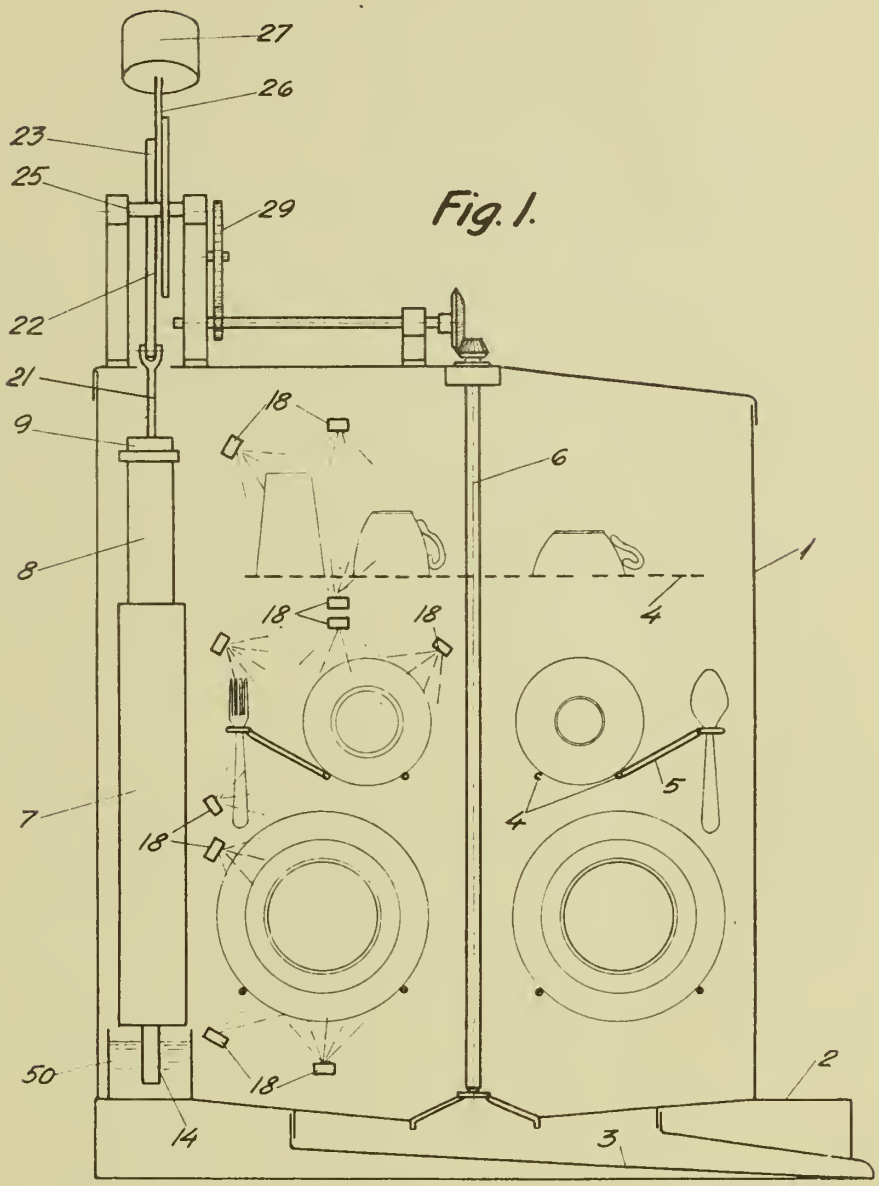

Fig. 1.

J. Hertz
Inventor

By Glascock Downing & Seebold
Attys.

PUBLISHED

MAY 11, 1943.

BY A. P. C.

J. HERTZ

DISHWASHING MACHINES, PRIMARILY FOR HOUSEHOLD USE

Filed Nov. 22, 1938

Serial No. 241,833

3 Sheets-Sheet 2

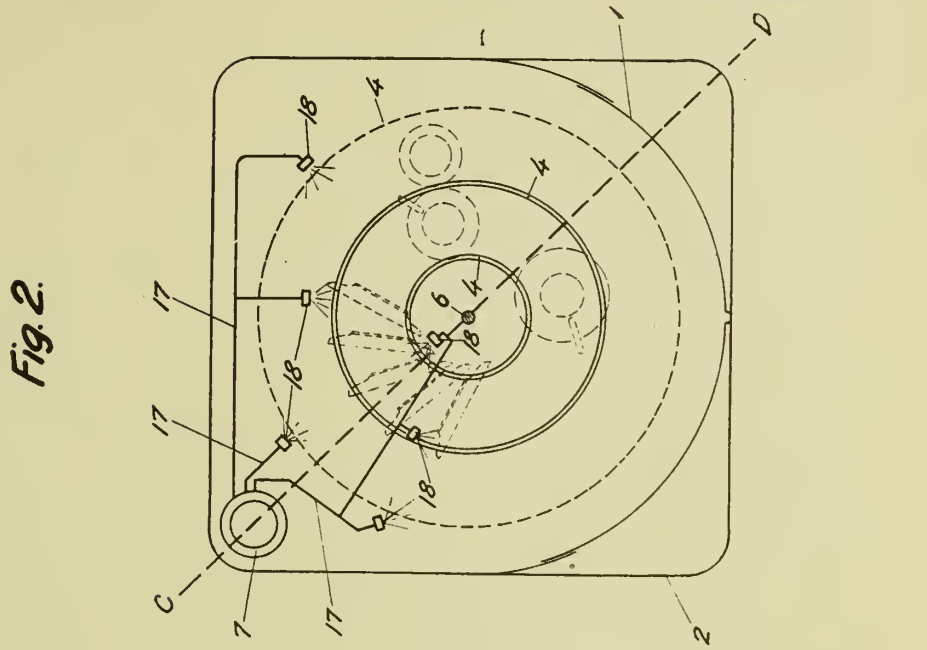

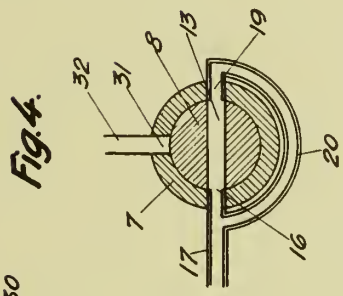

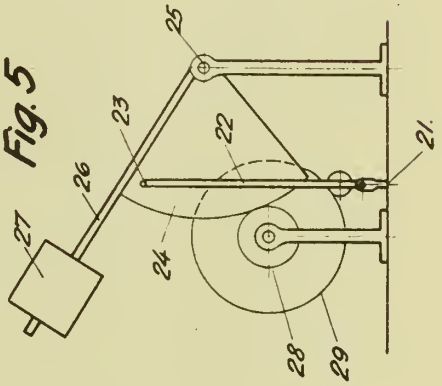

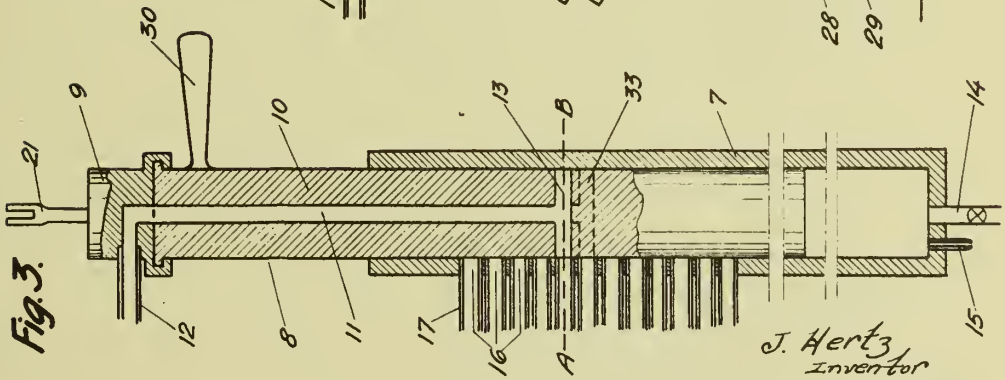

J. Hertz
Inventor

By: Glascock Downing & Seebold
Attys.

PUBLISHED

MAY 11, 1943.

BY A. P. C.

J. HERTZ
DISHWASHING MACHINES, PRIMARILY
FOR HOUSEHOLD USE
Filed Nov. 22, 1938

Serial No.
241,833

3 Sheets-Sheet 3

Fig. 6.

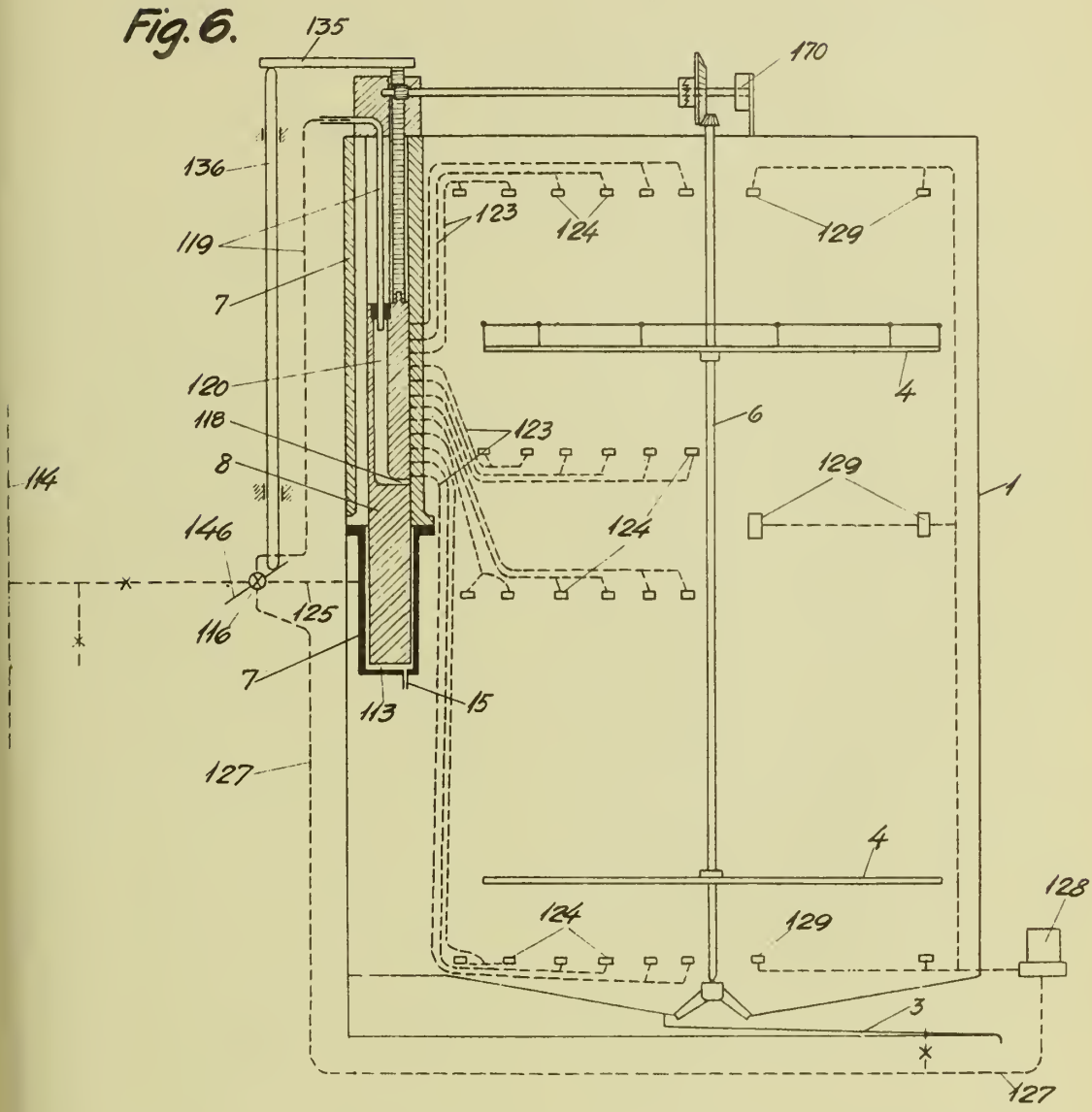

J. Hertz
Inventor

By. Glascock Downing & Seebold
Att'ys.

Published May 11, 1943

Serial No. 243,016

ALIEN PROPERTY CUSTODIAN

GAS ANALYSER AND GAS ANALYSIS APPARATUS

Victor Bayerl, Berlin, Germany; vested in the Alien Property Custodian

Application filed November 29, 1938

This invention relates to a new gas analyser for determining the proportion of one or more individual gases contained in a gas mixture. In comparison with known chemical gas analysers, the new apparatus in accordance with the invention is distinguished by the fact that it permits of a continuous and uninterrupted indication or record of the individual gas content being obtained with little or no time-lag in its response to variations. The new gas analyser may therefore be employed with particular advantage as an impulse transmitter in automatic regulators whose purpose is to maintain the content of a certain individual gas constant.

In the gas analyser according to the invention, the gas mixture to be examined, or a fraction branched off from the gas-mixture flow to be examined, is conducted through an absorption vessel in which the individual gas whose content is to be determined is absorbed. The invention is distinguished essentially by the fact that the quantity of gas mixture flowing to the absorption vessel and the quantity of residual gas flowing away from the absorption vessel are measured continuously by flow-technical method, the quotient of the two quantities giving a measure of the individual gas content sought.

The gas mixture to be examined is therefore supplied to the absorption vessel by way of a quantity regulator, so that the quantity of gas mixture flowing to the absorption vessel remains constant. A simple quantitative measurement of the gas flow leaving the absorption vessel then suffices for the determination of the content of the individual gas absorbed. If the residual gas is conducted into the atmosphere, this quantitative measurement may be carried out most simply by means of a precision pressure gauge which is connected, in front of a constriction, choke or damming aperture, to the passage conducting the residual gas away from the absorption device. Consequently, with the assistance of the new gas analyser in accordance with the invention, it is possible to cause the individual gas content to be continuously indicated and/or recorded and/or employed for regulation purpose without a time lag of any practical importance. Such lag as occurs is determined solely by the time which the gas mixture requires to pass through the absorption device.

A valve controlled by a diaphragm is preferably used for the regulation of the gas-mixture flow supplied to the absorption vessel, the connections being so arranged that the passage supplying the absorption vessel by way of the valve leads through the one diaphragm chamber and that, between the latter and the absorption vessel, a constriction or damming aperture is included beyond which a branch passage leading to the other diaphragm chamber is connected. If this regulator is connected in a comparatively narrow passage branched off from the withdrawal passage for the gas mixture to be examined and if the volumetric capacity of the diaphragm chamber traversed by the gas mixture and the volumetric capacity of the passage leading to the absorption vessel are kept as small as possible, then the quantity of the gas mixture contained in the analyser is also very small, so that the analyser operates practically without any lag. The constriction may then suitably be constituted by capillaries for which a bore of about 0.5 mm. with a length of 40 mm. is appropriate. The capacity of the absorption vessel, on the other hand, is made comparatively large, since the absorption liquid or other absorption medium has naturally to be renewed when it is approaching saturation with the individual gas to be determined. With a capacity of 5 to 10 litres of absorption liquid, the gas analyser works satisfactorily for a period sufficient for all practical purposes without renewal of the absorption medium, provided only that the volumetric capacity of the diaphragm chamber and the supply passages is kept sufficiently small.

A further very important advantage of the new analyser resides in the fact that the individual gas contents for different individual gases may be determined practically simultaneously by simply connecting a number of absorption devices for the various individual gases in series and measuring the quantity of gas leaving each absorption device.

One appropriate form of apparatus for carrying the invention into effect is illustrated in essentials in the accompanying drawing. Parts of the apparatus which do not appear to be necessary for the understanding of the essence and manner of operation of the invention have been omitted from the drawing:—

The gas mixture to be examined in respect to a certain individual gas content—for example, flue gas to be examined as to its content of carbon dioxide—enters at E into an inlet pipe Z. Whilst the main bulk of the gas mixture flows way at Z', a comparatively small part enters one chamber K, of a quantity regulator R through a constriction V. The two chambers K_1 and K_2 of regulator R are separated from each other by a diaphragm M which is loaded by an adjusting

spring F whose force can be set by means of a screw 5. From the chamber K_1, the passage L leads into an absorption vessel A which is filled with an absorption medium absorbing the individual gas to be determined, for instance with potash lye in the case of the determination of carbon-dioxide content. Arranged in the passage L in front of the point of entry into the absorption vessel A is a constriction B_1 which may suitably consist of a comparatively narrow capillary, of 0.5 mm. bore and 40 mm. length, for example. Beyond the constriction B_1, branches a passage L_1 which leads into the second diaphragm chamber K_2. Consequently the pressure difference arising at the constriction B_1 acts upon the diaphragm M so that the latter sets a valve V_1 controlled by it in such fashion that the quantity of gas mixture flowing through the passage L and conducted to the absorption vessel A remains constant.

If the gas mixture contained no trace of the individual gas to be determined, then the same constant quantity of gas as is passed by the regulator R would leave the absorption vessel A, so that the same pressure difference as obtains at the constriction B_1 would be produced at a constriction B_2 provided in the discharge pipe C and consisting, suitably, of a capillary like the constriction B_1, equal passage cross-sections and equal openings in the constrictions B_1 and B_2 being assumed. This assumption is allowable, since even with other cross sections of the constrictions and passages, proportionality between the pressure differences at the constrictions would at least be obtained. If the gas mixture consisted solely of the individual gas to be determined, for example solely of carbon dioxide, then it would be absorbed without residue in the absorption vessel, for example in the potash lye. There would accordingly be no gas flow whatever through the discharge passage C, so that no pressure difference would arise at the constriction B_2. It follows that the individual gas content may be simply read off on a differential pressure gauge connected to the constriction B_2, provided that the latter is appropriately calibrated. If the residual gas is conducted away to atmosphere, then atmospheric pressure obtains beyond the constriction B_2. In this case, instead of the pressure difference arising at the said constriction B_2, the pressure obtaining in front of the same may be measured by a precision pressure gauge D connected to the passage by means of a branch pipe. The gauge D may obviously be calibrated directly in percentage proportions of the individual gas content. Instead of or in addition to the gauge D, a precision pressure recorder may be provided if recording of the individual gas content is required or a pressure regulator if regulation is to be performed in accordance with the individual gas content. A zero-point correction of the gauge D may be effected at any time by adjusting the spring-loading of the diaphragm M by means of the screw S.

A complete analysis of a gas mixture in respect of different individual gas contents may be performed by connecting several gas analysers of the above-described kind in series, say in such manner that the residual gas from the first analyser, after passing the second constriction or measuring aperture B_2, is supplied to the quantity regulator of the second analyser and so forth. It is then only necessary to provide for the absorption devices to absorb the different individual gases in succession and, apart from the last part— analyser to provide differential pressure gauges instead of the gauges D for the indication of the individual gas contents. In this fashion, for example, a complete flue gas analysis in respect of carbon dioxide, carbon monoxide and hydrogen can be carried out by connecting in series three such analysers in which the absorption media react in succession to carbon dioxide, carbon monoxide and hydrogen.

In its scope, the invention is restricted neither to employment for flue-gas analysis nor to the use of the means utilised in the above-described example. The new gas analyser may be employed for the determination of the content of any desired individual gas in any gas mixture, provided only that an absorption medium absorbing only this individual gas is employed. For instance, the new analyser may be used with particular advantage in the synthetic production of petrol for the control of the distillation gases. In place of the diaphragm regulator used in the example, use may be made of any other differential pressure regulator, for example a dipping bell differential pressure regulator or the like. The pressure difference acting upon the regulator does not need to be derived from a damming aperture, choke or other constriction, for example a constriction like a venturi-tube, but may also be derived as a dynamic or flow pressure on the one hand and a static pressure on the other hand, for example by a nozzle directed towards the flow and a nozzle directed away from the flow, or in other ways. Further constrictional forms of the new analyser may readily be devised to suit the requirements of particular cases.

VICTOR BAYERL.

PUBLISHED
MAY 11, 1943.
BY A. P. C.

V. BAYERL
GAS ANALYSER AND GAS ANALYSIS APPARATUS
Filed Nov. 29, 1938

Serial No.
243,016

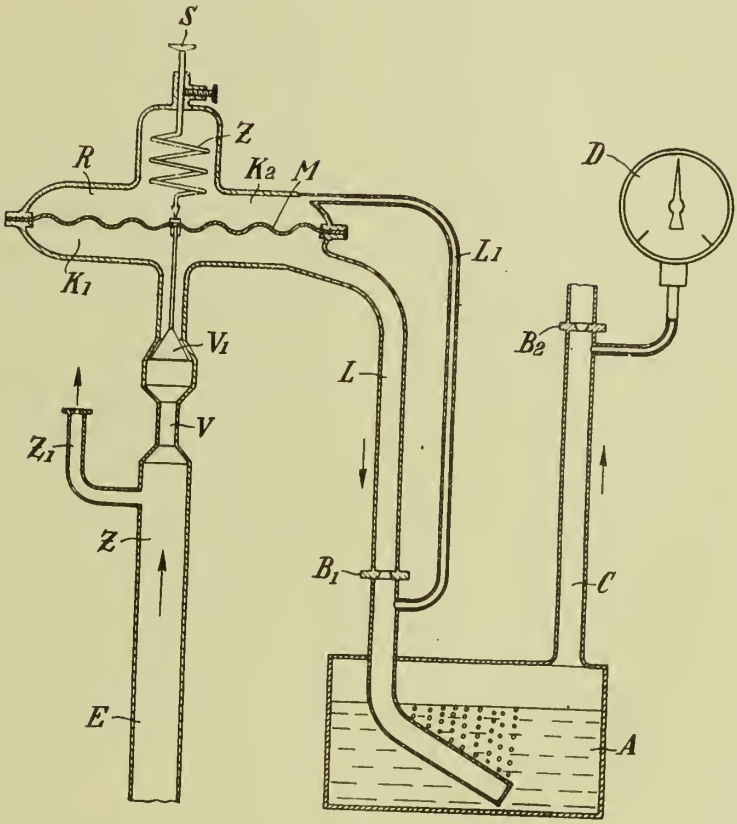

Inventor
Victor Bayerl
By
Attorney

Published May 11, 1943

Serial No. 243,598

ALIEN PROPERTY CUSTODIAN

STRUCTURAL PARTS FOR COACHWORK AND THE LIKE

Gustav Barchfeld, Troisdorf, Cologne, Germany; vested in the Alien Property Custodian

Application filed December 2, 1938

The invention relates to constructional parts for vehicles of all kinds in particular to coachwork parts of motor vehicles, which are made from fibres, fibrous fabrics or fibrous shaped bodies, with a binder.

It has already been proposed to make constructional parts for vehicles of synthetic resins containing fillers, by pressing such materials in moulds, or by wrapping or planking with sheet synthetic resinous materials as for instance fabric lacquered with synthetic resin. All the coachwork and constructional parts made in the hitherto known ways have as common features a uniform distribution of filler and synthetic resin over the whole cross section, and a high resin content which affords the mass which usually comprises in addition fibres of various kinds and forms, the necessary hardness or strength for the finished part. The large fraction hitherto necessary of brittle synthetic resin and its distribution in all zones brought with it a fault, however, which has made the use of synthetic resin masses for the purposes mentioned practically impossible hitherto, namely an extreme brittleness which under high stresses, such as arise for example in the case of accidents or collisions and are unavoidable, leads to complete destruction which is extremely dangerous to the passengers, and which does not occur for example with sheet metal coachwork. The other properties of the synthetic resins which are of advantage as compared with metal could not therefore be practically utilized in this field.

It has now been found that thoroughly satisfactory products can be obtained in a highly economical manner with synthetic resin materials, in the production of coachwork and constructional parts for vehicles of all kinds, if the cross section of the part is formed in a special manner and if new methods are used not hitherto met with in the working synthetic resins and the possibilities and effects of which were not known.

The problem of the invention is therefore to construct shaped parts of fibres and binder, or in other words to distribute the binder within the fibrous body, in such a way and in such quantity, that zones of the greatest tenacity and resistance to fracture are obtained along with zones of the greatest hardness and strength, so that a form is obtained which is statically particularly efficient for the loads arising.

This problem is solved in essence by the shaped fibrous parts being provided according to the laws of static with stiffening corresponding with the forces arising, these stiffenings consisting of embedded portions and/or surface layers containing more or less binder. These stiffenings extending through the shaped part form in a certain measure the struts and ties of a static structure akin to a bridge girder, the fibrous material filling the intermediate spaces substantially strengthening the framework of binder by its tenacity.

In a more specific aspect of the invention the outer surface layers, preferably of resistent, hard and dense material, are secured spaced apart by cross stiffenings and the hollow space bounded thereby is filled with material of less stiffness but of greater tenacity. In this embodiment of the shaped parts, both surface layers are hard and therefore relatively brittle. They are therefore better adapted to resist compressive and buckling stresses than tension.

So far therefore as the shaped parts only have to take their main stresses in one direction, according to the invention the one surface layer will be made as a compression and buckling resisting plate with high binder content, and the other surface layer as a soft tenaciously-elastic plate with a correspondingly low binder content. In this case the tenacious plate takes the tensile stresses and the hard plate the compression stresses, when the load bears on the pressure resisting plate.

A further strengthening of the shaped part constructed according to the laws of statics, can be obtained according to the invention by filling the intermediate spaces between the stiffenings or surface layers, with felted fibrous materials, which to increase their cohesion can be lightly sized by the methods usual in the paper industry; or the binder can also extend from the hard, binder-rich zones into the fibrous filling in gradually decreasing proportion.

The stiffenings can according to the invention be of two different forms, the synthetic resin being provided either over locally bounded spaces of circular section or over longitudinal strips, in such quantity that it penetrates the whole cross-section, whereby in the former case rod form stiffeners or stays are produced and in the latter case synthetic resin ribs, which bind the surface layers firmly together. With local enrichments of the synthetic resin, it is possible to arrange the stiffeners in desired form and number in the cross section.

In a further advantageous embodiment of the invention these synthetic resin ribs can run through the shaped part pairwise diagonally or in the form of curves as for example as orthogonal trajectories, by which arrangement particular

stiffness and resistance to pressure of the body are obtained. Naturally all the above described measures can be used together, in that both synthetic resin ribs which can be compared to a plate web in structural steelwork, and synthetic resin stays distributed between the former, are used, both kinds of supporting elements being continuous with or so to say welded to, the surface layer or layers.

In many cases it is further necessary to provide regions on the shaped body especially resistent to pressure for the reception of connecting or fastening members, which can be done according to the invention by providing an enrichment or synthetic resin extending right through the cross section at locally limited places.

These enrichments in synthetic resin can in a further form of the invention, advantageously be used for connecting together adjacent or different shaped parts, for example by screws and rails. For many purposes one surface layer of the shaped part can be dispensed with, so that the part consists of but one resistent surface layer of a hard and dense synthetic resin fibre mixture, on which synthetic-resin-containing rivets or ribs or rails are produced by corresponding application of synthetic resin, in the fibrous mass arranged on the hard surface layer. If now a layer or plate of highly elastic material, advantageously a synthetic material, is applied to the uncovered surface of such a shaped body, an additional reinforcement is provided for cases of loading which put the highly elastic layer under tension. For the highly elastic materials thermoplastic synthetic materials are preferably used, as for example polymers and mixed polymers of unsaturated organic compounds such as those of styrol, isobutylene, vinyl chloride, vinyl alcohol, acryl acid ester, and the derivatives and homologues of these compounds; further, natural and synthetic rubber products can be used.

So far as the need arises to apply any desired surface or covering layer to a fibrous shaped body with cross stiffenings after the production of the latter, this may be done according to the invention by directly producing the stays or ribs in a fibrous shaped body by local provision of synthetic material. The statically stiffened body is completed only after the application of the surface layers of the desired material having the desired properties and their union with or welding to the synthetic resin rivets or ribs.

So far as surface layers of highly elastic synthetic or other materials are used, the provision of additional longitudinal stiffeners which may again consist of local synthetic resin enrichments within the cross section of the shaped body and by which the cross-stiffeners are connected together or bridged over, grid fashion, is of particular advantage because the elastic cover layers are in themselves not hard enough to take mechanical stresses alone. In this way a grid-like, stiff structure is obtained, of local synthetic resin enrichments within the cross section with elastic surface layers.

The stays or ribs can be solid walled, and to reduce the weight or increase the moment of resistance for the same weight can be constructed as hollow bodies, for instance in tubular, U or V form. In particular according to the invention the ribs can be so arranged within the shaped body that they form a grid support. All these measures serve to increase the stiffness of the shaped body, without the elasticity or tenacity being reduced on that account. Particular effects as regards compressive strength and elasticity are obtained by varying the cross-sectional dimensions of these stiffeners, these being increased or decreased along their longitudinal axes, so that for example in the vicinity of the outer walls the stay or rib is stouter than in the centre of the shaped body and vice versa. The stay thus becomes similar to a rivet in shape. So far as the rivet is stouter towards the outer surface, the neighbouring synthetic resin enrichments approach one another so that in the limiting case the rivet heads coalesce or weld together into a covering layer or run with large surfaces into the covering layers and thus ensure a very intimate connection with the covering layers.

According to the invention the coachwork parts can also be produced in such a way that the resin content in the hard covering layers, ribs or rivets decreases in desired directions in steps or gradually, to any desired lower value or to zero, and also in such a way that a limited quantity of resin partially penetrates the neighbouring tenacious elastic layers, whereby reliable anchoring of the carrying, binder-containing framework into the complete fibrous structure is ensured.

The further result is obtained by this measure, of a gradual change from zones of great hardness to zones of great tenacity, whereby in particular cracking and tearing effects are not only much reduced but are above all locally limited. Stresses leading to the breaking limit therefore only act in the immediate neighbourhood of the breaking load.

These good properties can in many cases even be improved by arranging the resin rivets or ribs to project only partially into the shaped body, these stiffening elements preferably being arranged relatively staggered. These measures are used particularly when, according to the invention, the shaped body is put together of several layers provided with rivets or ribs, the individual layers then being relatively staggered, in such a way that rivets or ribs are produced running inclined to the surface, because through the staggering of the layers, staggering of the rivets is also easily attained.

In further development of the invention, large regions of the shaped body, as for example frames, edge rails and the like, as well as places for screw threads and attachments, are made hard right through by the use of an enriching quantity of resin, so that only the boundary or bounded stiffened zones retain their stiff and tenacious character simultaneously.

A plurality of such shaped bodies provided with rivets and ribs, and, it may be, built up layer fashion, can advantageously be welded together into a shaped body of desired form and size, by utilizing the neighbouring resin enrichments.

To increase the strength of connection, advantageously the stays or ribs can be secured together by means of embedded inlays of other substances of great strength, as for example metals and suitable fastening elements.

According to the invention the shaped bodies are provided with constructional parts of desired form and material for the purpose of further stiffening or to make connections possible, as for example parts of wood, metal, fibres of other kinds and synthetic materials, ropes, netting or fabric of fibrous material or metal, and finally foils, tubes or sections of wood, metal, vulcanized fibre or synthetic materials, which are united with the shaped body during the production

thereof, either at particular places or right through it. Further according to the invention in the production of the shaped parts, other materials which influence the final product in various desired directions can find additional use, as for example fillers of all kinds, colouring agents, plasticizers, swelling agents, solvents, wetting agents, lubricants, impregnating agents or water repelling and fire resisting chemicals.

Just as the stay form enrichments make spot welding possible, naturally with rib-form synthetic resin enrichments a connection with neighbouring parts can be effected by seam welding using the known process for hardenable resins.

The above described invention shows for the first time a way of producing shaped bodies with enclosed tenacious materials in place of hollow spaces, which have the same properties as shaped bodies made according to the laws of statics with hollow spaces. The production of such hollow spaces in the shaped bodies in one working operation by the pressure process is impossible. It is therefore a particularly valuable feature of the invention, that it enables the same effects to be obtained practically by the normal pressure process. Accordingly these statically stiffened shaped bodies can be produced with very small wall thickness, so that the parts are light. Further owing to their non-homogeneity splintering is effectively hindered because the hollow spaces filled with fibrous material can take up considerable deformation energy when a breaking load occurs on account of their unreduced elasticity. The fractures thus remain locally limited in contradistinction to the known shaped bodies pressed from synthetic resin.

Some examples embodying the invention are illustrated in the accompanying drawings.

Figure 1 is a perspective view with part broken away, of a motor vehicle door which is stiffened by synthetic resin rivets.

Figure 2 is a similar view of a similar door stiffened with synthetic resin ribs.

Figure 3 shows a motor vehicle door with synthetic resin ribs, synthetic resin stays and pressed in connecting members.

Figure 4 shows a motor vehicle door with grid-like stiffening.

Figure 5 is a section on the line A—B of Figure 4.

Figure 6 is a detail of a similar section, on a larger scale.

Figure 7 shows a motor vehicle door with tubular stays and local synthetic resin enrichments.

Figure 8 shows a motor vehicle door with synthetic resin stays having increasing and decreasing resin content,

Figure 9 shows a motor vehicle door in which the upper part consists of two shaped parts reinforced by stays and layered one on the other.

Figure 10 shows a piece cut out of a shaped body with synthetic resin ribs lying inclined to the surface,

Figure 11 is a section of a shaped body with staggered stays having decreasing resin content.

Figure 12 is a section of a shaped body in which one surface layer consists of a hard plate and the other of an elastic plate,

Figure 13 is a section of a shaped body in which both surface layers consist of hard plates and the cross section of the rivets uniting them increases towards the centre, and

Figure 14 is a section of a shaped body in which the stays are broadened at one outer surface in such a way as to constitute a continuous hard layer.

In Figure 1 the shaped part **1** consists of two hard cover layers **2** and **3** with high resin content, which are welded together by synthetic resin stays **4** distributed over the sectional surface. The stays are formed by local strong resin enrichments in the tenacious fibrous mass **5** lying between the outer surfaces. The upper rail **6** of the shaped part which is a motor vehicle door, is provided throughout with synthetic resin and is therefore very hard and stiff. The other parts **2**, **3**, **4** and **5** of the door wall are firmly attached to this hard part.

In the shaped parts shown in Figure 2 instead of rivets, synthetic resin ribs **8** are provided to unit the surface layers **2** and **3**, the ribs being produced stripwise by strong enrichment of the tenacious fibrous mass **5** with synthetic resin. In the same way the upper hard rail **7** is characterised by a high resin content.

Figure 3 shows the simultaneous use of stays **10** and ribs **11** within the fibrous layer **12**, which is externally so strongly provided with synthetic resin that hard surface layers **13** and **14** are produced. Further additional synthetic resin enrichments **15** are provided in the shaped part, which in this case serve for the mounting of the lock and if necessary of screws, bolts and the like connecting members.

In the example of Figure 4, rails **16** traverse the whole shaped part grid fashion, but are welded to the hard cover plate **17** on one side only.

In these rails or ribs as indicated by the shading in Figures 5 and 6, the synthetic resin content falls off continuously towards the opposite face so that the latter part of the shaped body is characterized by great elasticity.

As Figure 7 shows, the stays **18** can be of ring form so that their moment of resistance is correspondingly greater for the same weight. This door also illustrates the possibility of a resin enrichment **19** right through which serves for example for the attachment of a hinge.

The synthetic resin stays can also be constructed with varying cross-section; thus the stays **20** shown for example in Figure 8 are substantially thinner at mid cross than at the outer surfaces. There they run out at one end with broad sections into the hard covering layer **21** while at their opposite ends they terminate in rivet heads **9** bounded by the tenacious fibrous mass **5**.

In Figure 9 the strengthened top stiffening rail **22** of the door is obtained by the provision within the thick section of an additional cross stiffening **24** extending between the stays **23**.

In Figure 10 a grid like structure of the stiffening elements of the shaped fibrous body bounded by the plates **26** and **27** is formed by ribs **25** which are inclined to the surface so that the static resistance of the shaped body to forces acting in the plane of the plates is also increased. With the same advantage stays inclined to the surfaces could be used alone or together with ribs, the stays being formed by corresponding dimensioning of resin enrichments extending through the body.

In the shaped body according to Figure 11 separate hard or elastic surface layers are omitted, stays **29** being provided in the fibrous layer **28**, relatively staggered and decreasing in resin content from the outside inwards. This

arrangement is particularly adapted for the subsequent application of stiff or hard coverings.

In the example according to Figure 12 the one outer surface layer **30** consisting of hard material and the other **31** consisting of tenacious elastic material, are held together by synthetic resin stays **32**. The outer layer **30** here preferably consists of fibres provided with phenol-formaldehyde resins, and the other layer **31** of thermoplastic synthetic materials as for example polymers, mixed polymers or rubber like materials, with or without a plasticizer.

The example according to Figure 13 shows an arrangement in which the outer surface layers **33** and **34** consist of layers which are both hard but are of different thickness, while the section of the rivets connecting them increases towards the centre to such an extent that in the centre a grid-like continuous hard layer of very great strength is formed.

Such a strong layer can also be produced, as shown in Figure 14, by the stays **36** being broadened by resin enrichment towards one surface of the fibrous shaped body, to such a degree that they coalesce and thus form a continuous layer over one surface of the body.

GUSTAV BARCHFELD.

PUBLISHED G. BARCHFELD Serial No.

MAY 11, 1943. STRUCTURAL PARTS FOR COACHWORK AND THE LIKE 243,598

BY A. P. C. Filed Dec. 2, 1938 8 Sheets-Sheet 1

Fig. 1.

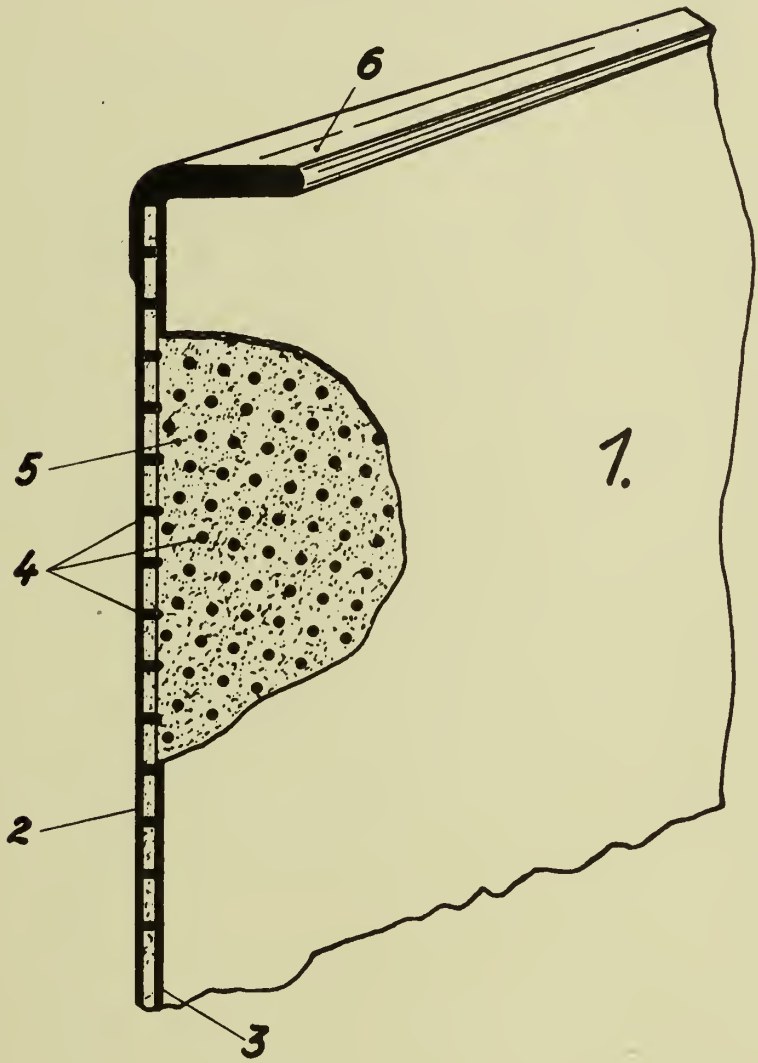

Inventor:
Gustav Barchfeld
By: Arthur J. Stephens
Attorney

PUBLISHED G. BARCHFELD Serial No.

MAY 11, 1943. STRUCTURAL PARTS FOR COACHWORK AND THE LIKE 243,598

BY A. P. C. Filed Dec. 2, 1938 8 Sheets-Sheet 2

Fig. 2.

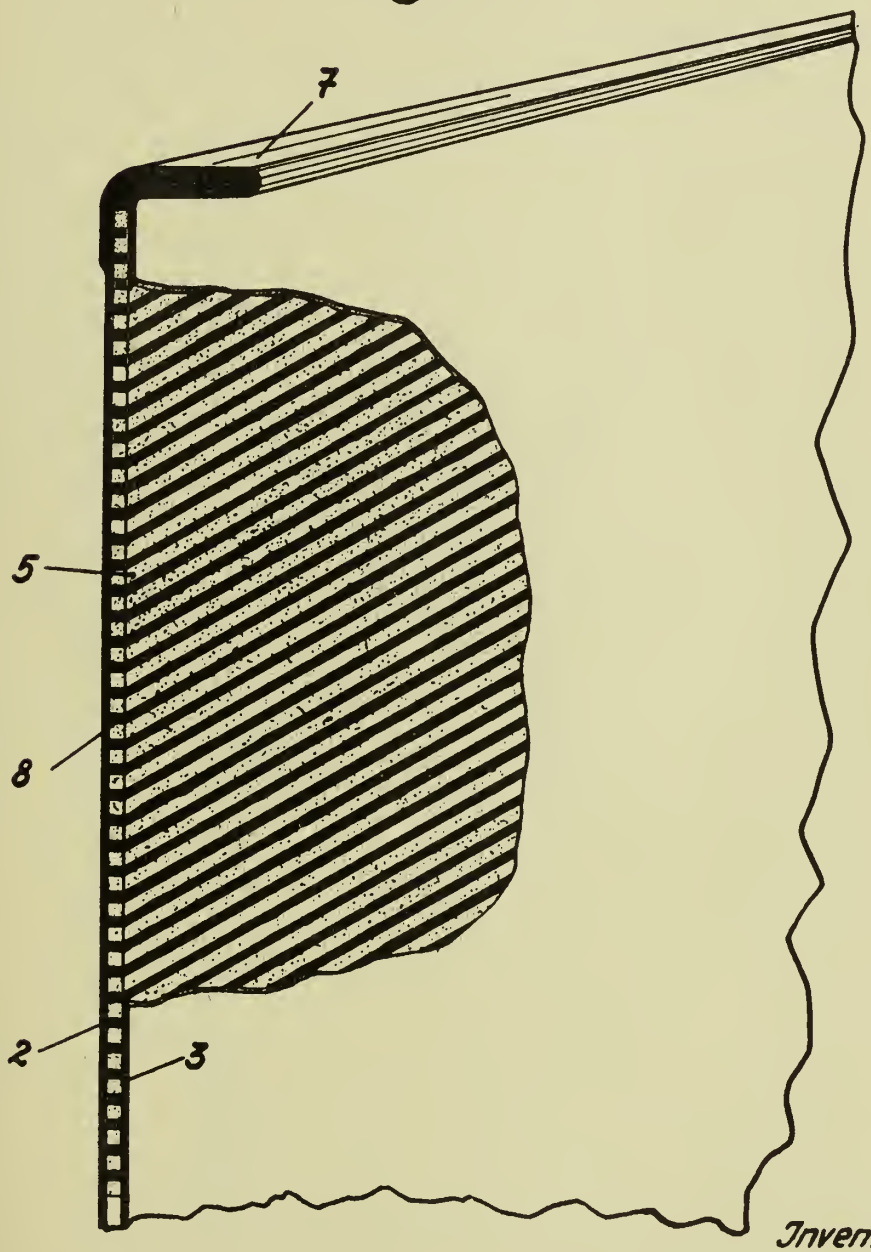

Inventor:
Gustav Barchfeld
By: Arthur J. Stevens
Attorney

PUBLISHED G. BARCHFELD Serial No.

MAY 11, 1943. STRUCTURAL PARTS FOR COACHWORK AND THE LIKE 243,598

BY A. P. C. Filed Dec. 2, 1938 8 Sheets-Sheet 3

Fig. 3.

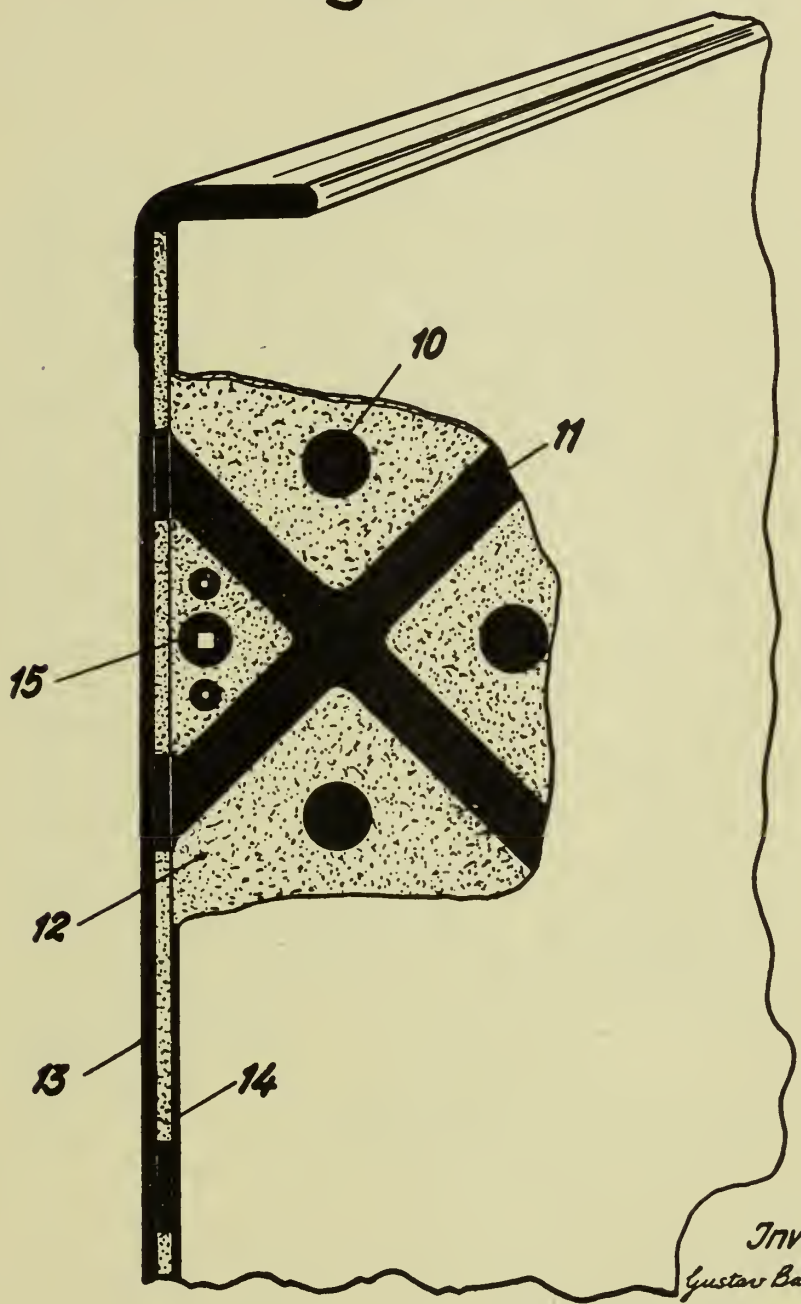

Inventor:
Gustav Barchfeld
By: Arthur J. Stephens
Attorney

PUBLISHED G. BARCHFELD Serial No.

MAY 11, 1943. STRUCTURAL PARTS FOR COACHWORK AND THE LIKE 243,598

BY A. P. C. Filed Dec. 2, 1938 8 Sheets-Sheet 4

Fig. 4

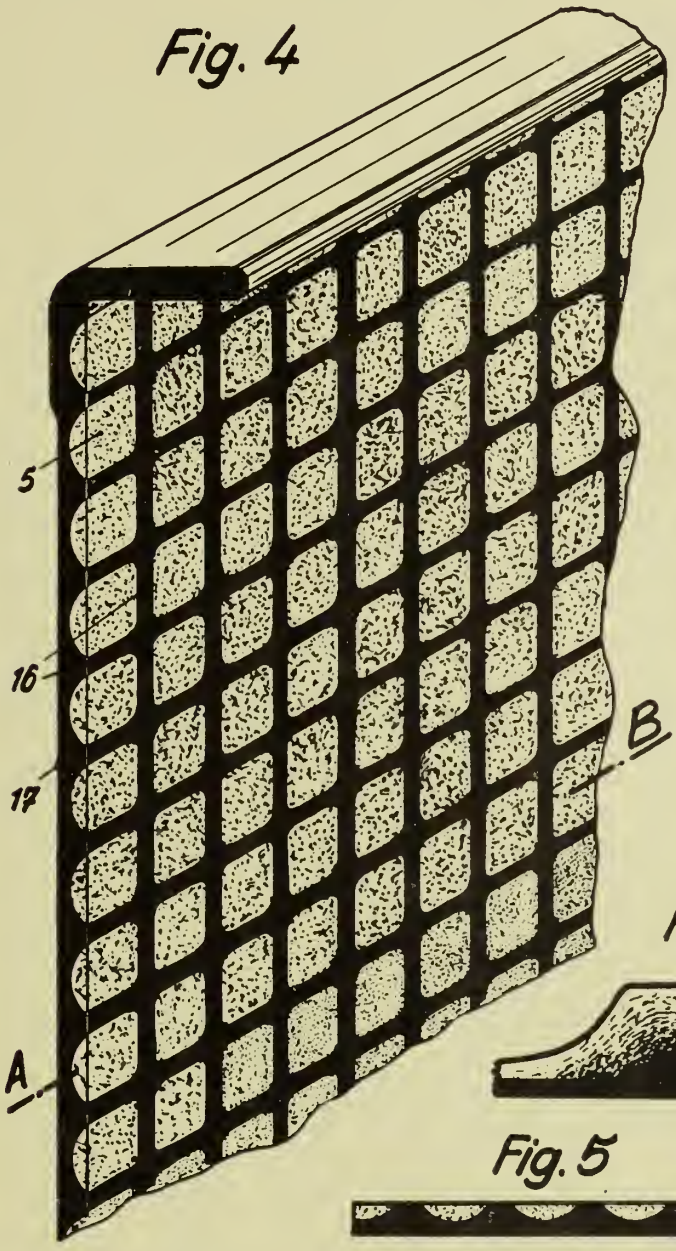

Fig. 6

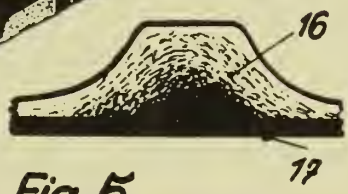

Fig. 5

Inventor:
Gustav Barchfeld
By: Arthur J. Stephens
Attorney

PUBLISHED G. BARCHFELD Serial No.

MAY 11, 1943. STRUCTURAL PARTS FOR COACHWORK AND THE LIKE 243,598

BY A. P. C. Filed Dec. 2, 1938 8 Sheets-Sheet 5

Fig. 7

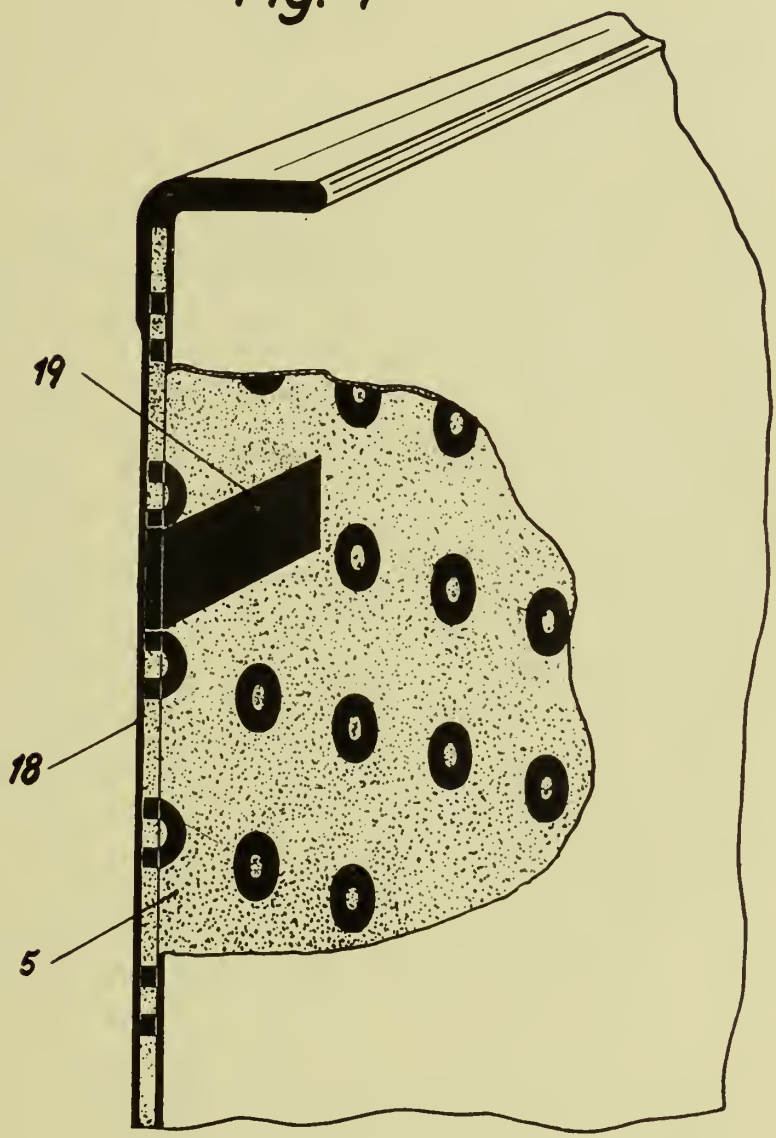

Inventor:
Gustav Barchfeld
By: Arthur J. Schlueter
Attorney.

PUBLISHED
MAY 11, 1943.
BY A. P. C.

G. BARCHFELD

STRUCTURAL PARTS FOR COACHWORK AND THE LIKE

Filed Dec. 2, 1938

Serial No. 243,598

8 Sheets-Sheet 6

Fig. 8

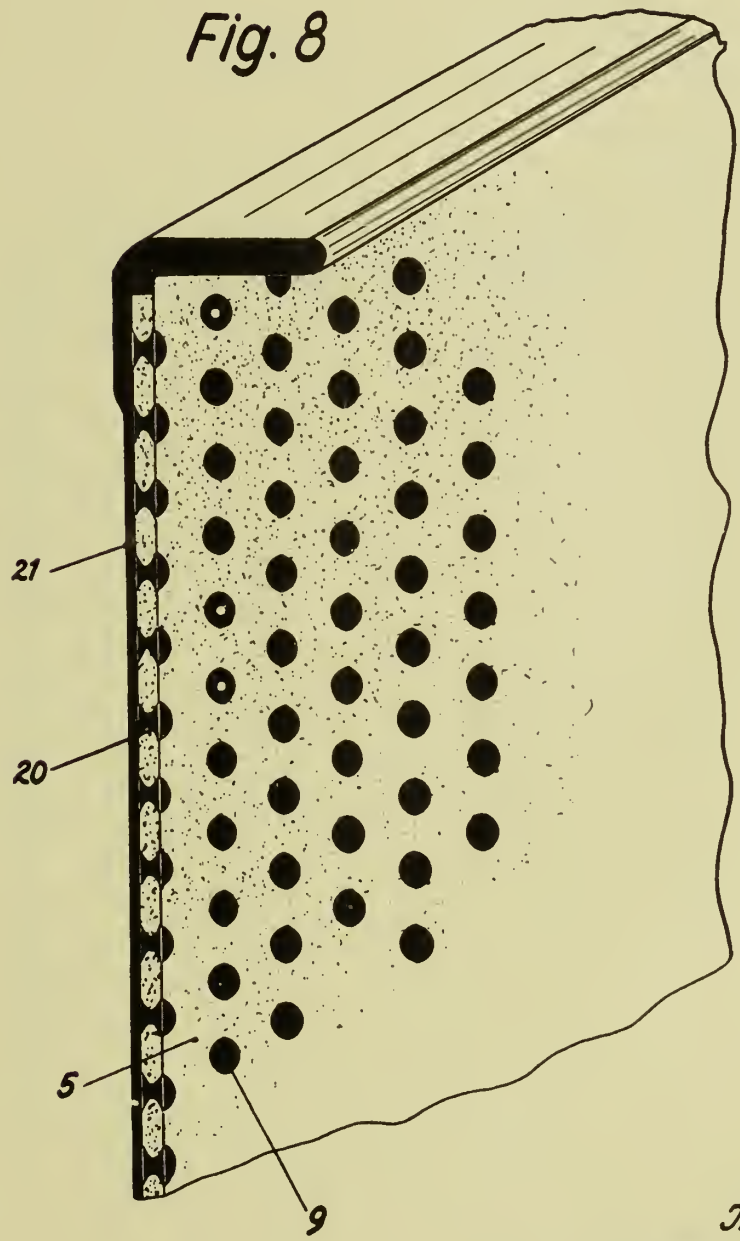

Inventor:
Gustav Barchfeld
By: Arthur J. Stephens
Attorney

PUBLISHED G. BARCHFELD Serial No.
MAY 11, 1943. STRUCTURAL PARTS FOR COACHWORK AND THE LIKE 243,598
BY A. P. C. Filed Dec. 2, 1938 8 Sheets-Sheet 7

Fig. 9

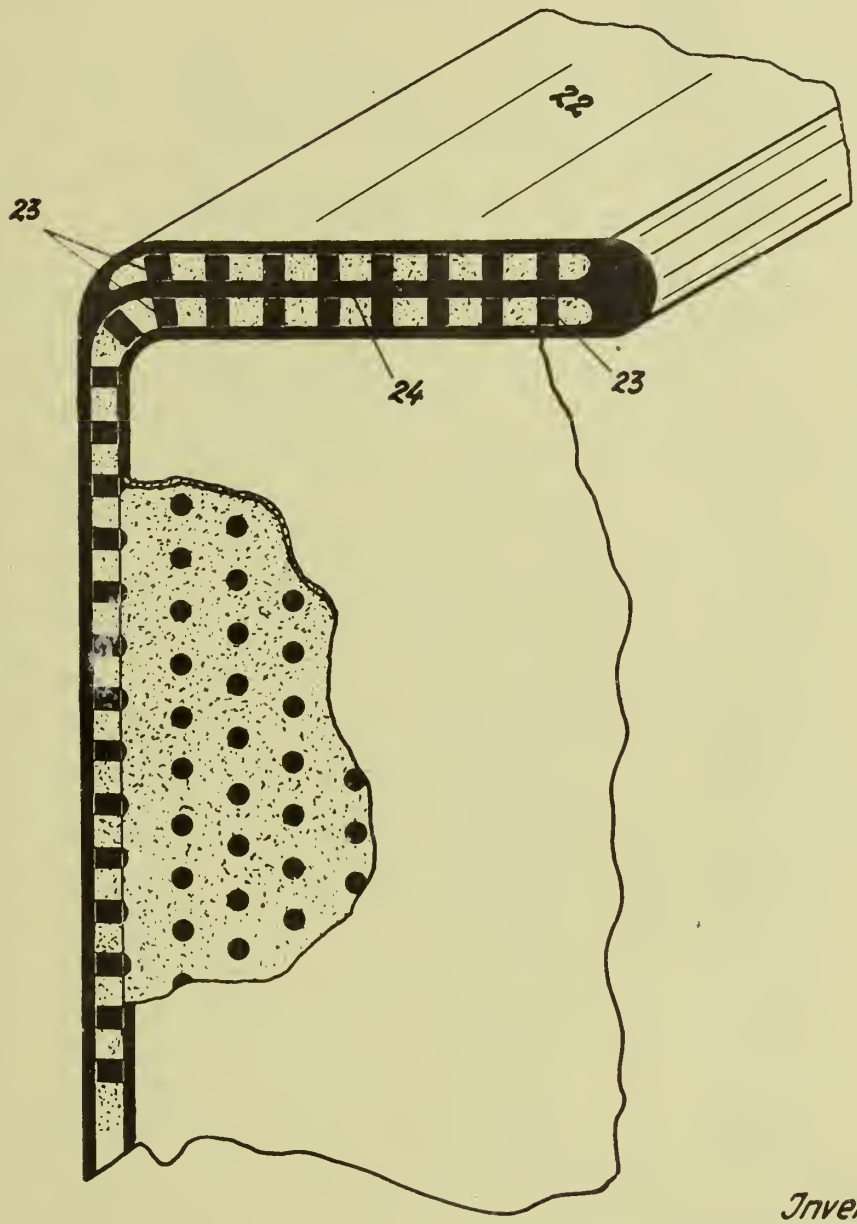

Inventor.
Gustav Barchfeld
By: Arthur J. Stephens
Attorney.

PUBLISHED G. BARCHFELD Serial No.
MAY 11, 1943. STRUCTURAL PARTS FOR COACHWORK AND THE LIKE 243,598
BY A. P. C. Filed Dec. 2, 1938 8 Sheets-Sheet 8

Fig. 10

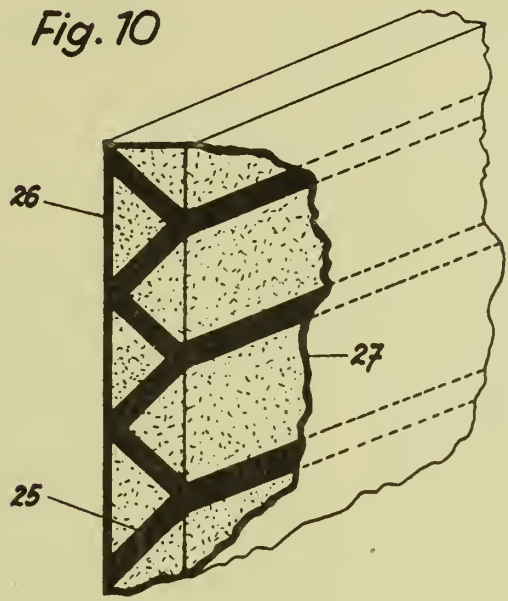

Fig. 11

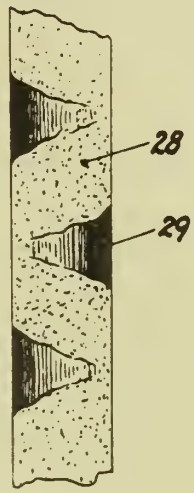

Fig. 12

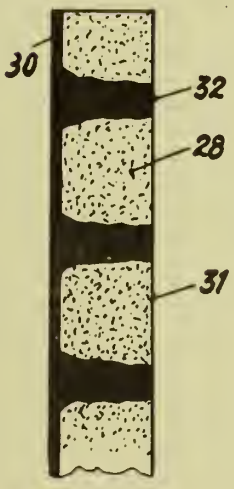

Fig. 13

Fig. 14

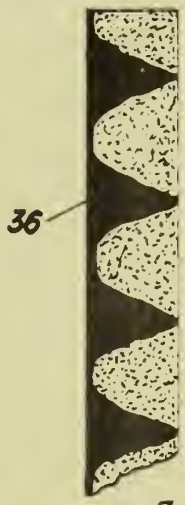

Inventor:
Gustav Barchfeld
By: Arthur D. Stephens
Attorney

Published May 11, 1943

Serial No. 244,268

ALIEN PROPERTY CUSTODIAN

TUBULAR SHEATHS FOR BOWDEN CABLE DEVICES AND THE LIKE

Helmut Zündorf, Rodenkirchen, Germany; vested in the Alien Property Custodian

Application filed December 6, 1938

In flexible sheaths for brakes or Bowden cable devices having a guiding sheath formed of laid wires it is necessary to prevent dust and moisture or water penetrating from the outside between the wires into the interior and the lubricant escaping from the inside, in order that the freedom of movement of the pull element shall not suffer. For this purpose it has already been proposed to lay hemp threads between the wires. According to another proposal these laid wire sheaths are surrounded by a rubber hose, but this construction is thick and heavy and, when the slipped-over hose becomes damaged, any moisture which may have penetrated will affect the arrangement throughout its entire length.

The present invention relates to a flexible tube for brakes, which consists of laid wires or braided bands and which is rendered impervious in the following manner. The wires or bands are each coated with an organic oil- and water-resisting substance (condensation products, artificial resin or polymerisates of acryl acid, polyvinyl, polyvinyl chloride, polystyrol, with or without the admixture of softeners or fillers) and this coating is prepared shortly before the laying of these wires in the laying machine by heating or the application of adhesives or solvents, so that, during the laying operation, the wire coatings become firmly and intimately united in the tube at the places of contact and the coatings form a compact closed sheath. The heating may be effected electrically or, in view of the temperatures required, in casings which are heated with steam. When vulcanisable substances (bitumen, artificial rubber, buna) are used, each wire may, before being wound at the laying reel, be covered on the wrapping and shearing machine with unvulcanised rubber and the laid or wrapped wire hose (consisting of wires or bands coated with organic substance) may then be drawn in the laying place or shortly afterwards through a vulcanising device which is disposed in the laying place or behind the latter. For mechanically protecting this sheath of oil-resisting a water-tight substance a second layer of wires or any other mechanically strong sheath of metal or other material may be used. The intimate connecting of the places of contact of the wire coatings of organic substance can, even in the case of unvulcanisable substances, be effected after the laying of the coated wires, if the kind of artificial material used permits of this (polymerisation). The above-described manner of forming a close impervious sheath has the advantage, that, in uniting the wires surrounded with individual coverings to form a closed common sheath, it is only necessary to act on the outer part of the individual coverings, in such a manner that the inner parts of the individual coverings will adhere firmly to the wires and will retain their original wall thickness. The finished impervious covering of the wires formed in this way may therefore be very thin and has this advantage over a slipped-on hose, that the impervious covering means is also between each two adjacent wires, so that, in contradistinction to the construction with an externally slipped-on rubber hose, even any wearing away of the outer layer of the organic substance will not detrimentally affect the impervious covering against the penetration of moisture. On the other hand the thickness of layer can be made very small as compared with the externally slipped-on hose or surrounding covering. As the organic substance is in the main only between each two adjacent wires, the total consumption of material is very small compared with other methods.

The figures show by way of example constructional forms of a flexible sheath for a brake, rendered impervious in this way. In Figs. 1 and 2 *a* indicates the wires which are first individually coated with a covering of organic substance *b* and which by melting or adhesion (vulcanisation or polymerisation) of this substance are intimately connected with one another to form an impervious sheath; *c* are the wires of an outer sheath which may be laid around the inner sheath, *d* is pull element of the flexible brake sheath or of the Bowden cable device, which is disposed so as to be capable of moving in the interior of the watertight sheath. This watertight and oiltight wire sheath provides greater flexibility and reliability than a hoselike superficial covering, in spite of less wall thickness and less consumption of material, as the effective thickness corresponds to the thickness of the wires. When two sheaths of laid wires are used, both of them or only the outer one may be made of coated wires as an impervious sheath.

In the interior of the sheath a helical expanding protective spiral of wire can be provided, which is not covered with organic substance, so as not to increase the friction of the pull element. Figs. 3 and 4 show a construction with an inner metal helix *e* made of round or profiled wires; *f* is the inner laid layer consisting for instance of bare wires. The closed watertight and oil resisting sheath bears the reference *g*. Preferably, the laid layers are laid in opposite directions,

h is the outer helical wire winding in the form of an open helix. The pull element again bears the reference *d*. The illustration given by way of example only shows the essential features of the invention. The idea underlying the invention as above described, may of course be applied to all such constructions of flexible sheaths for brakes, however the individual parts are formed or arranged with respect to one another. In place of coated round wires, profiled wires may also be used, for instance Z-shaped wires like those used in cables with closed armouring or wires of flat cross section, which interengage with tongue and groove.

The impervious sheath, instead of being made from laid coated wires, may also be made of braided or wrapped coated round or flat wires or bands (or a wrapping formed of flat strip). The procedure may be such that wires already provided with a coating are paid out by the reel of the laying machine and are so prepared before the laying point by heating, dissolving or rendering sticky the organic substance that they unite firmly with one another during the laying of the wires in the tube or are united with one another in a device disposed behind the latter under the application of pressure and/or heat. Instead of ready coated wires being supplied to the reels of the laying machine, wires without a coating may be used, which are then given individually just before or in the laying tube a coating of organic substance. The consolidation, adhesion or vulcanisation can in this method be effected in the same way as previously described.

The sheath of laid (or wrapped on) wires (or bands) produced in the manner described above, which are coated with an organic artificial material which is resistant to oil and chemicals, is also suitable for use as a hose for the conveyance of liquids, for instance oil and as it is very resistant to tensile and compressive forces, is particularly suitable for use in cases, in which liquids or gases are to be conveyed under high pressure. The laying of the wires which are coated with organic substance and are to be united may be effected in one or two layers over a supporting helix of round, flat or profiled wire. For increasing the resistance to pressure, an additional open wire helix may be wound around the sheath so formed. In place of the iron or steel wires in the organic sheath wires of some other metal, for instance of copper, aluminium, magnesium or, in order to reduce the weight light metal alloys, such as aldrey, electron, or duralumin may be used.

HELMUT ZÜNDORF.

PUBLISHED

MAY 11, 1943.

BY A. P. C.

H. ZÜNDORF

TUBULAR SHEATHS FOR BOWDEN CABLE DEVICES AND THE LIKE

Filed Dec. 6, 1938

Serial No. 244,268

Fig. 1

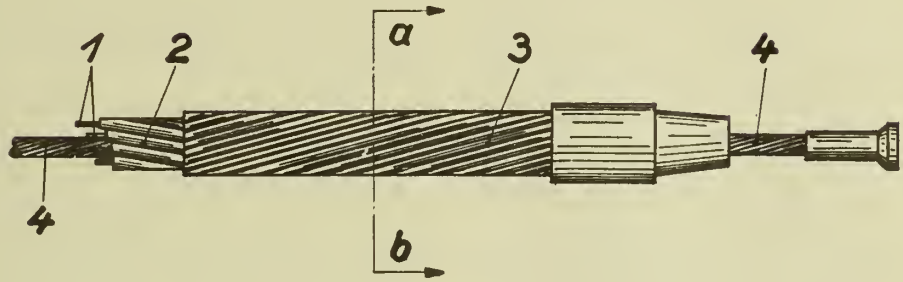

Fig. 2

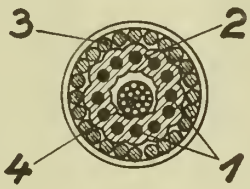

Schnitt a-b

Fig. 3

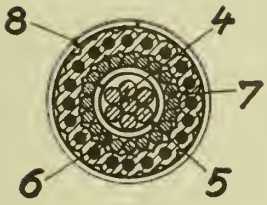

Fig. 4

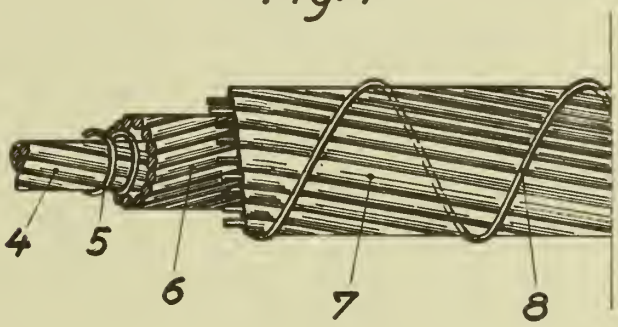

H. Zündorf
Inventor

By: Glascock Downing & Seebold
Attys.

Published May 11, 1943

Serial No. 245,735

ALIEN PROPERTY CUSTODIAN

BITUMINOUS COMPOSITION

Robert Horn, Berlin, Germany; vested in the Alien Property Custodian

No Drawing. Application filed December 14, 1938

This invention relates to bituminous compositions and methods of preparing same, and it has particular relation to compositions comprising mixtures of coal-tar and petroleum asphalt.

My invention has for its object to provide mixtures of coal-tar and petroleum asphalt, which form homogeneous products in any desired mixing proportion, and to provide valuable products comprising said homogeneous mixtures, such as materials for road-making, roofing paper, waterproofing and insulating masses, mastic, poured asphalt, bituminous emulsions, etc.

It is known in the art that homogeneous products can be obtained by mixing in any desired proportions coal-tar and Trinidad asphalt, whereas the preparation of homogeneous products from coal tar and petroleum asphalt is restricted to definite proportions. It is known that only up to 20% of petroleum asphalt can be incorporated with coal tar, and only up to 30% of coal tar can be incorporated with petroleum asphalt, if homogeneous mixtures should be obtained. Mixtures of coal tar and petroleum asphalt, which contain more than 20%, but less than 70% petroleum asphalt, are not homogeneous, as in such mixtures separation of certain constituents in flakes occurs.

This difficulty can be overcome, according to my invention, by using for the preparation of coal-tar- petroleum asphalt- mixtures a petroleum asphalt which has been obtained by an oxidizing treatment or by distillation under high vacuum. Mixtures of different kinds of such oxidized or blown petroleum asphalts and mixtures of different kinds of coal-tar may also be used in carrying out my invention.

I have discovered that viscous coal tars, which are rich in pitch, and have a dropping point over 25° C, can be converted with petroleum asphalt in any desired mixing proportion into homogeneous mixtures, by using for the preparation of such mixtures an oxidized or blown petroleum asphalt or a petroleum asphalt which has been distilled off under a high vacuum. Said viscous coal tars can, for instance, be obtained by distilling off raw coal tar until a tar of the desired quality is obtained as residue, or by mixing coal tar pitch with high boiling coal tar oil in suitable proportions. By mixing such viscous coal tars having a dropping point over 25° C in any desired mixing proportion with oxidized petroleum asphalt or with petroleum asphalt which has been distilled off under a high vacuum, homogeneous mixtures similar to unmixed petroleum asphalt are obtained, which show softening points over 25° C. Such mixtures are distinguished by high dropping points and can, therefore, be used for all purposes for which coal tars could not hitherto be used on account of their relatively low dropping points or on account of the too small differential between their dropping point and solidifying point.

The mixtures of coal tar and petroleum asphalt according to my present invention show a considerable resemblance to unmixed petroleum asphalt having the same softening point as said mixtures. Thus, my invention affords the significant possibility of obtaining binding agents of high softening points which contain a great percentage of coal tar and yet possess properties like unmixed petroleum asphalt. Mixtures according to my invention were prepared in accordance with the following examples, and were tested with regard to their practicability in comparison with unmixed petroleum asphalt. It has been found that these mixtures meet with all requirements of petroleum asphalt. Valuable, viscous binding agents can thus be obtained which may be used, for instance, in road-making (for surface treatments, impregnation, preparation of bituminous concrete, and poured coverings), in the manufacture of roofing paper and for insulation purposes. Some typical compositions embodying my invention would be, for example, as follows:

Example 1.—Mixture for surface treatments in road-making:

50% of coal-tar having a dropping point of about 30° C;

50% oxidized petroleum asphalt having a softening point of 50–60° C.

The mixture shows a softening point of about 26–27° C.

Example 2.—Mixture for insulations in road-making:

50% of coal-tar of a dropping point of 34° C;

25% of normally distilled petroleum asphalt having a softening point of 54–58° C;

25% of oxidized petroleum asphalt having a softening point of 90–100° C.

The mixture has a softening point of 34° C.

Example 3.—Mixture for bituminous concrete:

50% of coal-tar having a dropping point of 40° C;

20% of normally distilled petroleum asphalt having a softening point of 54–58° C;

30% of oxidized petroleum asphalt having a softening point of 75–85° C.

The softening point of the mixture is about 36° C.

A similar mixture having a softening point of about 38° C may be obtained from

50% of coal-tar having a dropping point of 33° C;

50% of petroleum asphalt which has been distilled off under a high vacuum and has a softening point of 60–70° C.

Example 4.—For poured pavings:

50% of coal tar having a dropping point of 42° C;

25% of normally distilled petroleum asphalt having a softening point of 54–58° C;

25% of oxidized petroleum asphalt having a softening point of 110–120° C.

The softening point of the mixture amounts to about 45°–46° C.

Example 5.—For mastic, insulations and grout fillers:

40% of coal-tar having a dropping point of 45° C;
30% of normally distilled petroleum asphalt having a softening point of 54°–58° C;
30% oxidized petroleum asphalt having a softening point of 130°–150° C.

The mixture has a softening point of about 54.5° C.

Thus, as shown by the above examples, according to my invention mixtures having a high content of coal tar can be obtained which can be used for all purposes instead of unmixed petroleum asphalt. These mixtures, which combine the advantages of petroleum asphalt with those of coal tar, can be obtained, for instance, by mixing together the individual components in the heat.

I have found that it is preferable in some cases to use in the mixtures according to my present invention as an additional component normally distilled petroleum asphalt, i. e. a petroleum asphalt which has been obtained without an oxidizing treatment and without distillation under high vacuum. By such admixture of normally distilled petroleum asphalt a certain protection of the components can be obtained during the mixing process which is carried out under heat. In addition a greater variability in the quality of the mixtures can be attained by using such admixtures. The addition of normally distilled petroleum asphalt, when used in suitable proportions, does not affect the unlimited miscibility of the other components, i. e. coal tar and oxidized or high-vacuum-distilled petroleum asphalt. I have found that for instance additions of 20–30% of normally distilled petroleum asphalt can be used, as shown in the above examples.

Furthermore, according to my invention, coal-tars, which have dropping points below 25° C, and an anthracene-oil content less than 40%, can also be worked up to homogeneous mixtures with petroleum asphalt in any desired mixing proportion.

It is known in the art that coal-tars of high anthracene-oil content, i. e. more than 40% of anthracene-oil, can be converted with petroleum asphalts into homogeneous mixtures in any desired proportion. Many kinds of coal-tars, particularly certain standardized road-tars contain, however, less than 40% of anthracene-oil. Homogeneous mixtures can only be obtained from such tars and petroleum asphalt, if the latter is admixed with coal-tar in a proportion not exceeding 15–20% of the mixture, or if the coal-tar is admixed to petroleum asphalt, the proportion of coal-tar not exceeding 30% of the mixture.

I have now found that such coal-tars having dropping points below 25° C and an anthracene-oil content less than 40%, can be worked up to homogeneous mixtures with petroleum asphalt in any desired mixing proportion, if petroleum asphalt is used which has a softening point higher than 54° C according to Kraemer-Sarnow, and has been obtained by an oxidizing treatment or by distillation under high vacuum. Such petroleum asphalt of high softening point can be incorporated with said coal-tars to obtain homogeneous mixtures without any difficulty. The mixtures, which may be obtained preferably by mixing together the preheated components, possess the advantages of petroleum asphalt as well as those of coal-tar, and, therefore, an increased usefulness in comparison with the individual components of the mixtures.

The selection of the petroleum asphalt, which is used for the preparation of the above described homogeneous mixtures, depends upon the properties of the coal-tar employed. I have found that the higher the softening point of the petroleum asphalt, the easier it is to obtain homogeneous mixtures. In the preparation of such homogeneous mixtures I use a petroleum asphalt whose softening point corresponds to the properties of the coal-tar employed. As a rule, the higher the pitch content, and the lower the anthracene-oil content of the coal-tar, and the higher its benzene-insoluble content, the higher the softening point of the petroleum asphalt should be.

Even coal-tars, which cannot be converted into homogeneous mixtures with 20% of a petroleum asphalt which has a softening point of 41°–45° C according to Kraemer-Sarnow, and the use, of which is customary in the preparation of coal-tar-asphalt-mixtures, give homogeneous products when mixed in any desired proportion with a petroleum asphalt, which has been obtained by an oxidizing treatment or distillation under high vacuum and has a very high softening point, for instance, preferably 80°–100° C according to Kraemer-Sarnow. I have further found that also in the preparation of mixtures containing about 30–40% of petroleum asphalt, preferably such a petroleum asphalt having a high softening point of about 80°–100° C should be used, as certain coal-tars, particularly those having a low anthracene-oil content, show an increased tendency of forming inhomogeneous products within the range of these mixing proportions. Such tendency can be easily overcome by using a petroleum asphalt of a very high softening point.

The following Examples 6–8 show some typical compositions containing coal-tars which have a dropping point below 25° C and an anthracene-oil content up to 40%.

Example 6.—A homogeneous mixture is obtained by mixing in the heat

40% of a road-tar II (viscosity 83 seconds at 30° C) and
60% of an oxidized petroleum asphalt having a softening point of 75°–85° C.

Example 7.—A homogeneous mixture is obtained by mixing

50% of an anthracene-oil-tar 65/35 and
50% of a molten petroleum asphalt obtained by distillation under high vacuum and having a softening point of 60°–70° C according to Kraemer-Sarnow.

Example 8.—A homogeneous mixture is prepared by mixing in the heat

50% of an anthracene-oil-tar 60/40, which cannot be converted into a homogeneous mixture with 15% of a petroleum asphalt having a softening point of 41°–45° C according to Kraemer-Sarnow, and
50% of an oxidized petroleum asphalt having a softening point 105° C according to Kraemer-Sarnow.

The homogeneous mixtures obtained in accordance with the above examples show an excellent applicability to road surface treatments, impregnation, waterproofing, and similar purposes.

I have found that the products obtained according to my invention can be used for the preparation of mastic, not only in masses which con-

tain mineral dust, but also in masses which have been prepared with pulverized native rock asphalt.

Asphalt mastic consists, as known in the art, of a mixture of a bituminous binding agent, and either mineral constituents being essentially mineral dust (mostly limestone dust) and sand, or pulverized native rock asphalt, if desired with an admixture of sand. It is further known that the bituminous substance contained in the pulverized native rock asphalt has a very low softening point. In order to obtain asphalt mastic from pulverized native rock asphalt with or without the addition of mineral constituents, a further amount of a binding agent must be incorporated with the pulverized native rock asphalt. Petroleum asphalt has hitherto been used as such additional binding agent, whereas coal-tar could not be used, as it caused separation of the individual components within the product obtained. I have now found that by using instead of petroleum asphalt the homogeneous mixtures obtained according to my invention from coal-tar and petroleum asphalt having a very high softening point, as an addition to pulverized native rock asphalt, a homogeneous asphalt mastic can be obtained. This effect is surprising. The bituminous binder contained, for instance, in the asphalt mastic prepared according to my invention contains 50% of the binder which has been originally present in the purverized native rock asphalt, and 50% of the added mixture of equal parts of coal-tar and petroleum asphalt of high softening point. Thus the bituminous binder contains 75% of petroleum asphalt and 25% of coal-tar and is composed of 50% of bitumen having a low softening point, 25% of coal-tar and 25% of petroleum asphalt of high softening point. It is an entirely unexpected effect that this mixture contained in the mastic remains homogeneous, and that an addition of only 25% of the petroleum asphalt of high softening point is sufficient to ensure homogeneity of the bituminous binder. I prefer to use in the coal-tar-petroleum asphalt-mixture a petroleum asphalt the softening point of which depends upon the softening point of the bituminous binder originally contained in the pulverized native rock asphalt: The lower the softening point of the bitumen contained in the pulverized native rock asphalt, the higher the softening point of the petroleum asphalt used as an admixture to coal-tar should be.

Thus according to my invention from pulverized native rock asphalt mastic-like masses can be obtained which, in spite of the addition of an essential amount of coal-tar, contain the whole amount of the bituminous binder as a homogeneous mixture. The following compositions may, for instance, be used.

Example 9.—Mastic for poured asphalt can be obtained from

45% of pulverized native rock asphalt of Sicilian origin;

4% of a binder consisting 50% of coal-tar having a dropping point of 36° C and 50% of a petroleum asphalt obtained by distillation under high vacuum and having a softening point of 80°–90° C according to Kraemer-Sarnow;

40% of stone chips 3/8 and

11% of sand o/3.

The mixing of these components may be carried out in the usual manner.

Example 10.—Mastic for luting can be obtained from

84% of pulverized native rock asphalt of German origin, and

16% of a binder consisting of 50% of a coal-tar having a dropping point of 36° C and 50% of oxidized petroleum asphalt having a softening point of about 75°–85° C according to Kraemer-Sarnow.

I have further found that the homogeneous mixtures obtained according to my invention from coal-tar and the above described petroleum asphalts, can be used instead of unmixed petroleum asphalt in the preparation of poured asphalt.

In the preparation of poured asphalt, as known in the art, petroleum asphalt having a softening point of about 45°–50° C is mixed and heated with limestone dust, sand and stone chips. The mixing is carried out at temperatures of about 200°–210° C in stationary heaters or in heaters mounted on trucks, and the mass is continuously agitated by stirring arms during the heating in order to protect it from being burnt. The time which is necessary for carrying out this mixing process in the heat depends upon the amount of the mass treated. In a heater containing, for instance, 4 tons (4000 kilograms) of the mass, the heating process takes about 4–4½ hours. During the heating process the individual parts of limestone dust, sand and stone chips are coated with the bituminous binder and the interstices are filled up.

I have found that in order to obtain by means of the above described homogeneous mixtures of coal-tar and petroleum asphalt a poured asphalt which possesses the same valuable mechanical properties as a product which has been prepared by means of unmixed petroleum asphalt, a mixture of bitumen and coal-tar should be used whose softening point is about 10°–15° C lower than the softening point of an unmixed petroleum asphalt which is used under similar conditions. A coal-tar and petroleum asphalt mixture having a softening point of about 28°–40° C can therefore, be used. This fact is surprising, as it could be expected that a soft and impractical product will be obtained if such a soft binder is used.

A thorough investigation has, however, shown that a directly opposite result is attained. A poured asphalt, for instance, which has been prepared by using a mineral aggregate of entirely normal granularmetiric composition, and a binder consisting of a homogeneous mixture of coal-tar and petroleum asphalt, and having a softening point of 33° C only, possesses the same mechanical properties as a normal poured asphalt product which has been prepared by means of unmixed petroleum asphalt. The coal-tar-petroleum asphalt binder was thereby used in an excess of 0.5% in comparison with the usual amount of an unmixed bitumen binder.

Example 11.—50 parts of coal-tar having a dropping point of about 36° C are mixed with

50 parts of an oxidized petroleum asphalt having a softening point of 60°–70° C according to Kraemer-Sarnow.

Thereby 100 parts of a mixture having a softening point of about 33° C according to Kraemer-Sarnow are obtained.

A poured asphalt can be obtained by working up as described above, 9.2% of the above mixture, 25.0% of limestone dust, 25.8% of sand o/3 and 40.0% of stone chips 3/8.

Furthermore by using the homogeneous coal-tar-petroleum asphalt mixtures obtained according to my present invention, emulsions can be prepared in which the softening point of the bituminous binder is as high as it could be obtained hitherto by the use of an unmixed petroleum asphalt only. A binding agent consisting of a ho-

mogeneous coal-tar-petroleum asphalt mixture and having a softening point of about 26°–30° C may for instance be used. The use of such emulsions in road-making affords the benefit of obtaining after the breaking of the emulsions an immediately coherent, well adhering coating of the binder which holds firmly together the mineral particles. It is known in the art that such coating cannot be obtained if the known coal-tar-bitumen emulsions are used, whereas the emulsions prepared with homogeneous mixtures of coal-tar and petroleum asphalt according to my invention, possess the same favorable properties as the known emulsions used in road-making and prepared by means of unmixed petroleum asphalt.

Example 12.—50 parts of coal-tar having a dropping point of about 30° C are mixed with

50 parts of oxidized petroleum asphalt having a softening point of 60°–70° C according to Kraemer-Sarnow.

100 parts of a binder having a softening point of 28° C according to Kraemer-Sarnow are obtained.

50 parts of said binder having a softening point of 28° C

1 part of an emulsifying agent (alkali soap) and 49 parts of water are worked up in the usual manner to an emulsion, whereby a stabilizing agent or other additions, known per se, may be used.

Example 13.—50 parts of coal-tar having a dropping point of 30° C are mixed with

50 parts of oxidized petroleum asphalt having a softening point of 50–60° C according to Kraemer-Sarnow.

100 parts of a coal-tar-bitumen mixture having a softening point of 25° C according to Kraemer-Sarnow are obtained.

56 parts of said coal-tar-bitumen mixture,

1 part of an emulsifying agent (alkali soap) and 42.5 parts water are worked up to an emulsion.

The emulsion can be prepared, for instance, by intimately mixing by means of a suitable apparatus water and the molten bituminous substance containing an emulsifying agent.

The term "petroleum asphalt" is applied in the present specification and claims to the semi-solid to solid residues obtained from the distillation of semi-asphaltic and asphaltic petroleums. In the present application the "softening points" were determined according to the known method of Kraemer-Sarnow; the "dropping points" were termined according to the known method of Ubbelohde, and the "solidifying points" were determined according to the known method of Metzger.

The term "high vacuum" is applied in my present specification and claims to a vacuum which is obtained by nearly complete evacuation of the distillation apparatus, and corresponds, for instance to 10 mm. mercury.

ROBERT HORN.

Published May 11, 1943

Serial No. 248,047

ALIEN PROPERTY CUSTODIAN

FURNACES AND STOKING INSTALLATIONS THEREFOR

Jacobus Nicolaas van Rijswijk, The Hague, Holland; vested in the Alien Property Custodian

Application filed December 28, 1938

The invention relates to stoking installations, and to furnaces having stoking installations, of the so-called "underfeed" type, i. e. the type wherein there is a fire-bed and the fuel is fed into a fire-pot below the fire-bed; said fire-pot communicating with a fuel opening in the fire-bed.

This type of stoker has the particular disadvantage that the fuel fed into the fire-pot is pressed to one side of the pot, owing to the pressure exerted on the fuel by the fuel-conveyer, and there is the result that at the one side of the fire-bed there is a piling up of fine coals, while only coarse coals are delivered to the other side of the fire-bed.

It is clear that this will cause non-uniform combustion owing to the unequal resistance which air encounters on burning fine and coarse coals.

The chief object of this invention is to obviate the disadvantage referred to, and with this object in view the invention consists in providing a rotating fire-pot open at its upper end and having its upper end in registry with the fuel opening in the fire-bed, the fire-bed being stationary and provided with air-access apertures.

In stoking installation in accordance with the invention the combustion takes place only partly in the rotating fire-pot, so that one derives the advantage not only of being independent of the swelling properties of the fuel, but also of not being bound to a maximum-capacity.

According to the invention moreover the fire-pot is rotatably positioned between the fire-bed and the casing of the conveyer (normally a screw conveyer) for feeding the fuel to the fire-pot.

The especial advantage of this feature is that a zone of friction exists between the mass of fuel rotating with the pot and the stationary edge of the fire-bed fuel-opening, said edge being preferably divergent towards the upper surface of the fire-bed. As a result combustion is influenced favourably, because:

(*a*) The tendency of the clinker to form an obstruction above the place where the highest temperature prevails (i. e. just above the rotating fire-pot) is resisted by the friction of the rotating mass. The clinker is thus held loose and further removed from the stationary fire-bed.

(*b*) The friction prevents swelling of the parts of coal and coke, while the fuel layer on the fire-bed remains more exposed to the forcing air and more suitable for good and regular combustion.

In order to prevent the driving-mechanism for the rotating fire-pot from expanding due to the heat of the fire and also from sticking due to ashes and other ingredients, according to a further feature of the invention one of the rib-rings, of which the fire-pot consists, is constituted by a member like the rim of a gear wheel, so that the gear teeth lie in the air-chamber of the furnace, and, for rotation of the fire-pot, the gear teeth are in direct engagement with a toothed wheel that is mounted on the motor-driven shaft of the screw-conveyer and lies also in the air-chamber.

The accompanying drawing illustrates one example of the invention, and in the drawings:

Fig. 1 is a vertical section of part of a furnace having a stoking installation in accordance with the invention.

Fig. 2 is a sectional plan view taken on the line II—II of Fig. 1, the furnace having been omitted in the interests of clearness.

Referring to the drawing:

The furnace is divided into a combustion chamber **16** and an air chamber **14** by the fire-bed **6**. A conveyer for the fuel, constituted by a screw conveyer comprising a screw element **1** in a tubular casing **2**, projects into the air chamber and the tube **2** has an outlet opening towards the end within the chamber. The threading of the screw element includes a part **3** between the outlet opening on the tube and the end of the tube within the furnace which part has a pitch opposite to that of the threading at the fore-end. The purpose of the threading **3** is to prevent the coals being fed from pressing on the cover **4** closing the end of the tube, and the threading **3** moreover prevents the coal dust from penetrating to the bearing of the screw-element, the fuel being driven back.

The outlet opening on the tube **2** is in registry with the lower end of the fire-pot **5**, the fire-pot being as shown open at both its upper and lower ends and being rotatably seated on a bearing around the outlet opening of the tube. The upper end of the fire-pot is in registry with the fuel opening **11** in the fire-bed, the fire-pot being thus positioned between the tube **2** and the fire-bed.

The fire-pot **5** is slowly driven by a toothed wheel **8** on the shaft **7** of the conveyer-element **1**, the shaft **7** being in driving connection with a motor **17** through the intermediary of a transmission gear which is housed in the casing **21**. The toothed wheel engages a ring of gear teeth **9** on the fire-pot **5**. The fire-pot **5** consists of superimposed, spaced blocks or rib-rings, so that air-apertures are formed and the teeth **9** are formed on the lowermost of the rib-rings.

The fire-bed **6** does not participate in the rota-

tion of the fire-pot. It is hollow and water-cooled and consists in the illustrated example of a welded box of sheet-iron and is provided with tuyeres 10, which are welded to the under- and upperside of the bed respectively and are arranged in a number of concentric rows. The tuyeres 10 in the innermost row are, as Fig. 2 shows, inclined and terminate in the central opening 11 of the bed 6.

The inlet-tube for the fire-bed cooling water is denoted by 12, while the outlet occurs at the opposite side by means of the tube 13. Both the inlet-tube and the outlet-tube communicate with the heating-boiler.

The air-chamber 14 from which air passes, not only through the tuyeres 10 into the combustion chamber, but also through the air-delivering apertures into the fire-pot, is supplied with air through a pipe 20 by a fan 19. The fan is driven by the motor 17 through the intermediary of belt and pulley mechanism 18. The ring of gear teeth 9, and also the toothed wheel 8 engaging with it, lie in the air-chamber.

The furnace is constructed double-walled as shown and the fire-bed 6 is fixed at its sides against the inner sides of the furnace by means of suitable material.

JACOBUS NICOLAAS VAN RIJSWIJK.

PUBLISHED

MAY 11, 1943.

BY A. P. C.

J. N. VAN RIJSWIJK

FURNACES AND STOKING INSTALLATIONS THEREFOR

Filed Dec. 28, 1938

Serial No. 248,047

Fig. 1

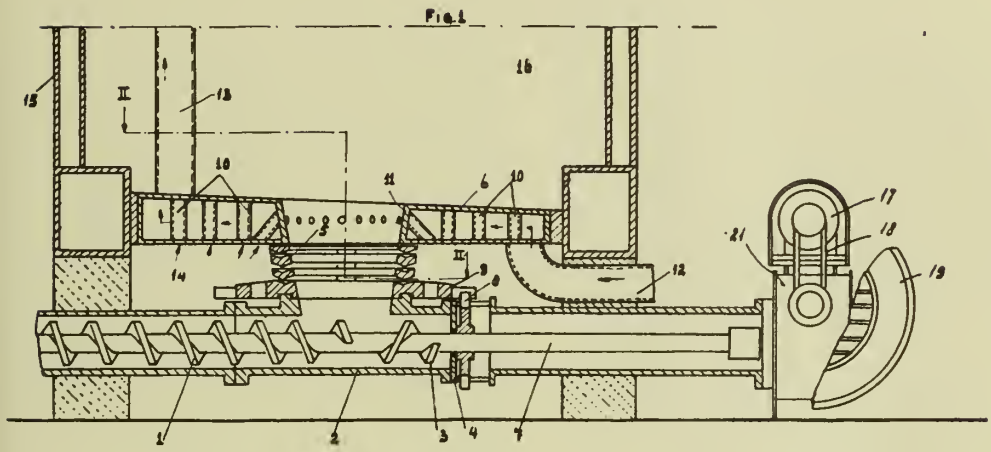

Fig. 2

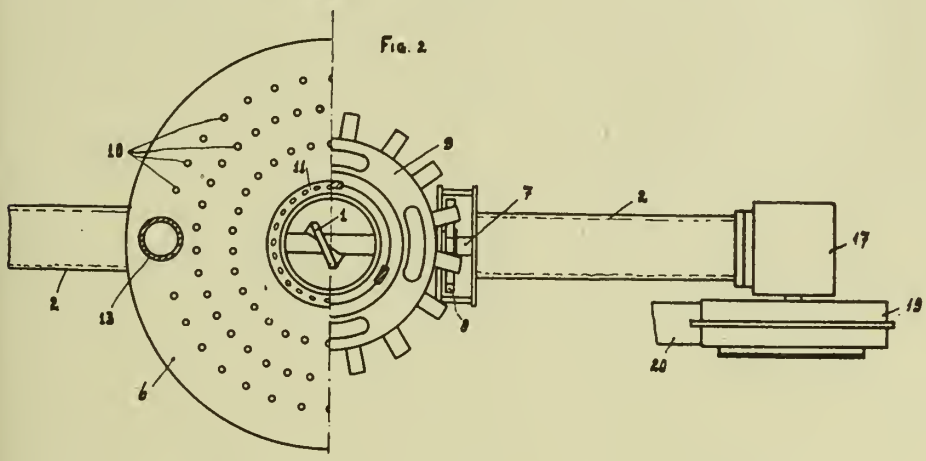

Jacobus Nicolas van Rijswijk INVENTOR.

per N. D. Fitzpatrick

ATTORNEY.

Published May 11, 1943

Serial No. 248,645

ALIEN PROPERTY CUSTODIAN

PROCESS FOR VARNISHING SUPPORTS MAINLY COMPRISING RUBBER

Roger Girche, Paris, France; vested in the Alien Property Custodian

No Drawing. Application filed December 30, 1938

The invention relates to the superficial varnishing of supports made wholly or partially of rubber, more particularly of coatings which chiefly contain rubber, either in the ground and macerated state, or in the state of rubber latex, mixed, or not, with dyes and/or other additions or fillers, said coatings being laid on cloth or other foundations. The invention may, furthermore, be applied to rubber articles.

The object of the invention is, on the one hand to enable a homogeneous and permanent binding to be obtained between the varnish and the support mainly comprising rubber (hereinafter named "rubber substratum") by means of an interposed binder, and also, on the other hand to ensure the preservation of the rubber substratum, of the varnish and also of the binder, by so choosing the composition of said binder and chiefly the method of using same, as to produce finally the stabilization of the elements present and prevent any alteration in time, either owing to their mutual action, or by the effect of their natural ageing or ripening.

For this purpose, the invention has for its object a chemical process which is characterized by the fact that a composition is prepared, at the instant when it is to be used, which is formed by adding to a mixture comprising oils and natural and/or synthetic resins or gums, a conversion agent which contains a sulphur derivative and is intended to perform the dual function of a vehicle for the sulphur for vulcanizing purposes and of a polymerizer for the mixture of oils and resins, so as to cause by reaction the formation of a kind of artificial rubber which changes successively and progressively from the liquid state to the gelatinous state, and then to the solid state, said composition being applied, when liquid, on the rubber substratum.

In practice, the basic mixture of the binder intended to act as an intermediary between the rubber substratum and the varnish (which may be of any kind: fatty varnish drying in the cold or in the hot state, varnish made with oil, with natural or synthetic gums or resins, or with cellulose esters) is composed: of drying oils, or semi-drying or non-drying oils; of slightly volatile supplying agents or solvents or of volatile solvents; of natural and/or synthetic gums or resins and also, optionally, of cellulose esters, particularly in the case in which said binder has to form, of its own accord, the covering varnish.

These products are mixed either in the cold or in the hot state, in order to obtain, in the latter case, by an appropriate fusion, a homogeneous mixture and a quicker and more perfect solution in the hot state, in the oils, of the various resins used. On the other hand the final varnish may advantageously contain a certain proportion of the heavy or light solvents and also of the supplying agents contained in the binder.

Furthermore, a solution of a halogen compound of sulphur is simultaneously prepared, preferably of sulphur chloride, in a solvent such as a benzol product, for example. Said solution is kept apart and is only introduced into the basic mixture at the instant when same is to be used.

In order to carry out the invention, it is possible for example to operate as follows:

Assuming that the foundation is formed by a cloth, the same is coated with a mixture of macerated rubber or with latex filled with dyes and with fillers in which have been previously introduced vulcanizing agents, accelerators and anti-oxidants or anti-ageing agents.

When the rubber substratum has reached a sufficient thickness and the light solvents or the aqueous solvents have been eliminated by drying, preparation is made for covering the rubber substratum with one or a plurality of thin layers of binder. For this purpose, into a previously dissolved mixture containing, by way of an exemplary formula, the following constituents, in the proportions expressed hereinafter in parts by weight:

Linseed oil	100
China-wood oil	25
Castor oil or supplying agents such as phthalates, lactates, tricresylphosphates and homologues	250
Natural resin	15 to 20
Synthetic resin (Albertol for example)	15 to 20

the solution of which is facilitated by fusing to 180–240° C., according to the gums or resins, are introduced, at the instant when it is to be used (and this method of operation forms a particularly important feature of the invention):

10% of a 10% benzol solution of commercial sulphur chloride, said solution being kept apart ready for use. The sulphur chloride may be replaced by any other halogen compound of sulphur which is capable of performing the dual function of a vulcanizing agent and of an agent for converting the mixture of oils and resins into artificial rubber.

A slightly exothermic reaction takes place between the mixture of oils and resins and the sulphur chloride, which leads to the formation

of a kind of "artificial rubber" or "oils rubber", that is to say a chlorinated and semi-vulcanized compound which progressively changes from the liquid state to a gelatinous state, and then to a solid state.

Said reaction, which is due to said converting agent, takes place in the space of about twenty minutes; this is why the application has to be effected quickly, while the mixture is liquid. This time is moreover reduced by the partial elimination of the benzol during the drying; and when it has passed, a thin pellicle or film is thus deposited on the rubber substratum. Simultaneously, the benzol which dilutes the sulphur chloride, penetrates into the rubber substratum and carries with it therein a slight quantity of oils and also of sulphur chloride, thereby making the rubber permeable and swelling same, thus performing the "binding" function and completes its vulcanization, in spite of the relatively low temperatures (30° to 60° C.).

After said film of "binder" has become sufficiently dry, the final finishing varnish is applied by a classical process, such as spreading or spraying. Said varnish may be a varnish mainly comprising cellulose or mainly comprising synthetic or natural gums or resins, or cellulose esters. Its drying is effected either by the quick method or by the slow method.

As the vulcanization of the rubber continues for several hours or several days, the embossing and the printing of the whole arrangement can be effected without difficulty. During this time, a kind of ripening takes place as is usual when rubber is used, and also when varnishes are used, since there is always the drying phase which permits of manipulating the goods without deteriorating them, then the ripening or ageing phase which is well known in all rubber industries and also in the paint and varnish industries, at the end of which phase the outer surface assumes its final appearance and hardness.

An interpenetration gradually takes place of the various constituents of the products which are present either in the rubber substratum, or in the "binder", or in the varnish; this produces a perfect homogeneity which makes it impossible to separate the superposed pellicles or films. But said interpenetration becomes stabilized at a certain final phase, owing to the fact that the intermediate film becomes converted into an artificial rubber which becomes stronger and stronger while remaining flexible. This film of artificial rubber becomes insoluble in the solvents which surround it and so prevents a continuation and an increase of said interpenetration, the final result of which could only be the destruction of both the rubber and the outer varnish.

In fact, in the other varnishing processes which do not use any binder or which do not use a binder obtained by the methods and the formulae which are the object of this invention, the ageing of the rubber is accelerated by the penetration of foreign products such as oily products. The rubber becomes sticky or powdered and the article is destroyed. The same applies to the varnish which dries up and becomes opaque or breaks under the slightest pressure.

It is of course obvious that the film of binder according to the invention may be of such composition that it forms of its own accord the coating varnish, in particular if it contains a sufficient proportion of resins, gums or cellulose esters, together or separately. This result may be obtained by doubling, for example, the quantities of resins indicated in the above formula. It is also possible to add to the constituents provided in said formula 100 parts of a cellulose ester, for example nitrocellulose, supplied with supplying agents which are homologues of those of the "binder", such as castor oil, and are supplied in the shape of collodion by means of solvents and diluting agents such as ethyl acetates, alcohols, benzol products.

ROGER GIRCHE.

Published May 11, 1943

Serial No. 248,646

ALIEN PROPERTY CUSTODIAN

CEMENT AND ASBESTOS BASE MIXTURES USED AS PLASTER WORK COVERING LAYERS OR WALLS

Léon Joseph Billé, Nogent sur Marne, France; vested in the Alien Property Custodian

No Drawing. Application filed December 30, 1938

The invention described below concerns mixtures with a base of cement, particularly molten cement, and asbestos, which are employed as coverings on all metal, wood or masonry surfaces for protecting them against corrosion and destruction.

The new mixture is characterized by the fact that the cement employed is a molten cement and that the diluting liquid is a solution of an alcaline silicate in water.

Under these conditions, the setting of the molten cement takes place only slowly owing to the very low amount of calcium salts set free by said molten cement undergoing hydration, these salts forming with the alcaline silicate an insoluble calcium silicate; this slow setting permits the preparing of the mixture in advance and leaves all the time desirable for applying the mixture in a sufficiently liquid state. On the contrary, all the other types of cements diluted with an alcaline silicate in aqueous solution would set almost instantaneously. The molten cement imparts to the mixture remarkable hardness and compactness; the alcaline silicate increases its compactness and cohesion. This plastering has a remarkable adherence, even on metal.

It is thus possible to prepare, for all sorts of applications, more or less thick plasterings or covering layers, or walls with exceptional adhering, hardness, solidity properties and offering a high degree of protection against corrosion and destruction, whilst constituting a good insulation against heat and cold.

By way of example, there have been given below a certain number of these mixtures.

Example 1

For obtaining 1 kg of plastering, one will mix:

	Gr.
Molten aluminous cement	180
Very fine asbestos fibres	80
Chalk in powder	110
Fontainebleau sand (silicous, very fine)	270
The whole diluted with an aqueous solution of sodium and/or potassium silicate at 30–40° Bé	360
	1.000

By stirring, there will be obtained a clear paste which, after cleaning the surface to be protected, is applied either with the brush or with the spray tube, or, if it is to be applied upon the inner surface of pipes, by centrifugation, the pipe containing the liquid plaster being rotated rapidly about its axis.

The aqueous solution of alcaline silicate gradually yields the water necessary for the slow setting of the molten cement and, by slowly reacting upon the chalk ($CaCO_3$) and upon the small amount of calcium salts set free by the molten cement, it gives an insoluble calcium silicate.

The silicous sand serves as a filler and by reason of its hardness it prevents the wear of the plastering surface.

After is has been applied, the plastering is left to dry during 2 to 3 days, whereupon the plastered piece is placed in a drying stove traversed by the burnt gases from a coke furnace, brought down to a temperature of 150 to 300° C., or, if the piece cannot be placed in a stove, a fire will be lighted next to it in order to subject the plastering to the warm gases coming from the fire. The warm carbon dioxide will accelerate the fixing of the alcaline silicate in presence of the calcium carbonate under formation of insoluble calcium silicate.

When taken out of the stove, the plastered piece may be immersed, while still warm, into bitumen or into another hydrocarbon used for covering; this bitumen, rendered very fluid by the heat, will penetrate into the very fine pores of the plastering and will also deposit, as a thin continuous film, upon the surface of the plastering, thereby producing an absolutely water- and gas-tight clogging up of the plastering.

This treatment is particularly suitable for pipes which are to be used for conveying very pure water, since it is known that such waters will at a length dissolve substantially any substances except however bitumen and the other hydrocarbons suitable for covering.

Example 2

The plastering of Example 1 may be modified in a manner to avoid the necessity of heating. For this, it is merely necessary to add a small amount of hydraulic lime or air hardening lime in a manner to ensure that all the alcaline silicate is transformed into insoluble calcium silicate by suitably activating this transformation.

The thus modified formula may for instance be as follows:

	Gr.
Molten aluminous cement	170
Very fine asbestos fibres	70
Chalk in powder	100
Hydraulic or air hardening lime	40
Fontainebleau sand	260
Sodium and/or potassium silicate at 30–40° Bé	360
	1.000

Example 3

The two above plasterings, when they are not clogged up by a bitumen film, present the drawback of necessitating a certain time for becoming insoluble. This insolubility is accelerated and may in fact be reached very rapidly by adding to the alkaline silicate either insoluble casein, or

powdered sodium fluosilicate, in the proportion of 1 to 3% of insoluble casein or 2 to 10% of sodium fluosilicate according to the desired rate of becoming insoluble. The chalk may then be omitted.

The thus modified formula may for instance be the following:

	Gr.
Molten aluminous cement	300
Very fine asbestos fibres	120
Fontainebleau sand	220
Potassium silicate at 30–40° Bé. added with 1–3% insoluble casein or 2–10% sodium fluosilicate in powder	360
	1.000

If it is desired to increase the resistance to wear of the above plasterings, the silicous sand may be replaced by a filler of a harder powdery substance, as for instance emery or silicon carbide.

This filler may be added until it forms a proportion of 80% by weight of the whole. There is thus obtained a less liquid plastering capable of forming a thicker covering layer, which is very compact and has a high resistance to wear, the main applications of which being the following:

Inner plastering of pipes used for conveying muddy or sandy waters, covering of metal masts or bridges exposed to winds carrying fine sand.

Example 4

If, on the contrary, it is desired to obtain a less compact covering layer, in order to permit applying it in a still greater thickness, the sand will be replaced by porous substances such as cork, pumice stone, vermiculite (mica) scraps, which will be projected upon the surface of a first semi-liquid layer or added during the stirring.

The thus modified formula may for instance be as follows:

	Gr.
Molten aluminous cement	150
Asbestos fibres	70
Chalk in powder	100
Alkaline silicate at 30–40° Bé	400
Cork, pumice scraps	280
	1.000

According as to whether the pores of such a plastering will be sufficiently fine or coarse, they will be filled, after drying of the plastering, either with molten or dissolved bitumen, or with a varnish with a base of natural rubber resin, or of synthetic resin, or cellulose, gum, or with one of the above substances to which there has been mixed a filler such as cement containing asbestos powder.

Such a clogging up will yield a continuous surface film, anchored in the mass by the filling of all the pores; a layer of this sort will present no risks of cracking and will form a surface non-penetrable to liquids and gases. This covering will be used with advantage for the pipes and tanks conveying or storing extremely pure or corroding waters, acid liquids or the like.

The plastering according to the formula of Example 4, if prepared with a sufficiently low consistence, may be projected in a more or less thick layer upon walls for constituting an insulating covering against heat or noise, or a protection against fire. In this case, it will receive no clogging up treatment.

If the plastering is projected under sufficient thickness on two plates of thin sheet metal or wood, the two plates being thereafter strongly applied against one another by their plastered sides, there will be obtained sufficiently thick and solid panels for constituting walls, for instance the inner walls of ships, which are non-combustible.

More generally, the plasterings or covering layers according to the invention may be adapted to the great variety of uses, particularly for articles such as pipes, tanks, boilers (inside and outside), fire boxes, condensers; they will protect the metal against all causes of corrosion or attack, for instance from any kinds of water, salt fogs, hot gases and fumes, acids produced in the combustion of sulphurous fuel oils or coal, corroding action of crude oils, benzines, fuel oils, even if sulphurous, alcohols, creosotes, whether cold or warm, or the like.

The addition of potassium silicate to the sodium silicate gives a better viscosity suitable for the spreading of the plasterings or coverings.

The plasterings of this sort are practically indestructible owing to their adherence, their hardness and their compactness.

Applied with one clogging layer to concrete constructions, pipes or tanks, they will impart to these an absolute and everlasting impermeability to gases and water.

They will further effectively protect masonry and wood, serve for constituting incombustible panels and prevent the evaporation of benzines in the storage tanks during summer months, while maintaining the viscosity of the heavy oils during the cold months by greatly reducing the cooling down of the oils.

The numerical indications and the auxiliary substances indicated above do not, of course, present any limitative character and may be varied at will without thereby departing from the frame of the invention.

LÉON JOSEPH BILLÉ.

Published May 11, 1943 Serial No. 249,805

ALIEN PROPERTY CUSTODIAN

HYDRAULICALLY OPERATING TRANSMITTING DEVICES OF THE PISTON-TYPE

Hans Molly, Berlin-Tempelhof, Germany; vested in the Alien Property Custodian

Application filed January 7, 1939

This invention relates to improvements in or relating to hydraulically operating transmitting devices of the piston type, comprising a cylinder block having several cylinder bores, said block being turnably mounted around its longitudinal axis, and a driving member whose axis of rotation may be inclined against the cylinder block longitudinal axis for changing the piston stroke. The piston rods of the piston reciprocating in said cylinder block are hinged to said driving member.

The wellknown devices of this type are usually provided with a cardan joint for driving the cylinder block from the driving member. In some cases the cardan joint is arranged to simultaneously transmit the actuating moment to the cylinder block.

As is wellknown, such a cardan joint may be dispensed with in order to simplify the manufacture of the transmitting device. In this embodiment the piston rods themselves are provided as transmitting member for the cylinder block or the driving member.

The primary object of the invention is to provide a special centering member for positively guiding said driving member and said cylinder block with respect to one another concentrically to the centre of the effective driving plane. This centre is to be defined as the centre in which the driving member axis intersects the plane comprising the hinging points of the piston rods to the driving member. In this way several advantages are obtained as will be explained in the following description.

A further object of the invention is to overcome the difficulties encountered in cases in which said special centering member is provided and at the same time the piston rods are hinged to the driving member.

Furthermore the invention aims to improve the means for hydraulically relieving the controlling mirror face cooperating with the end face of the cylinder block.

Other objects, aims and advantages of the invention will be more fully explained in the following description with reference to the accompanying drawing in which:

Fig. 1 is a sectional view of the transmitting device according to one embodiment of the invention.

Fig. 2 is a sectional view of the transmitting device according to another embodiment, in which the controlling mirror face and the end face of the cylinder block are spherically formed.

Fig. 3 is a plane view of the controlling mirror face of the embodiment shown in Fig. 2.

Referring now to the drawing

Fig. 1 illustrates the wellknown transmitting device of the piston type, comprising a cylinder block 1 having several cylinder bores 3 arranged around the axis of rotation 2. 4 is a piston provided in each of said bores 3, the piston rod 4a being hinged at its outer end to a driving disc or flange 6. By means of a ball 5 the axis of rotation 7 of the driving disc 6 may be inclined relative to the cylinder block 1 as shown in Fig. 2. For this purpose the cylinder block 1 is swingably mounted around an axis 8 passing through the point of intersection of the two axes 2 & 7 mentioned above. Therefore, the axis 8 lies in the plane comprising the centre of the balls 5. 9 is a frame mounted for angular adjustment around the axis 8, said frame being shown to have a controlling mirror face 10 which is in engaging relation with the end face of the cylinder block 1 so as to control in a wellknown manner the communication of the cylinder bores 3 with the input- and the output channels 11 and 12 respectively.

In the embodiment shown in Fig. 1 these two channels lead to the pivot axis 8. The special centering member for auxiliary centering of the driving disc or flange 6 and the cylinder block 1 with respect to one another is shown to be a ball 13 whose centre coincides with the centre of the effective driving disc plane, i. e. the point of intersection of the two axes 7 & 8.

According to Fig. 1, the ball 13 is arranged at the cylinder block 1, whilst the supplemental ball cup 14 surrounding said ball 13 is mounted at the driving disc or flange 6. In this event the ball 13 is guided in a centric bore 15 of the cylinder block 1 and is kept in engaging relation in said cup 14 by means of a spring 16.

Of course the ball and its cup may be exchanged, i. e. the ball may be arranged at the driving disc or flange 6 and the cup at the cylinder block 1, then it is possible to fixedly arrange the ball to the driving disc. In the reversed arrangement according to Fig. 1 care should be taken that in spite of any deviations of the pivot axis 8 from the effective driving disc plane the centre points of the balls remain in this plane. For this reason the ball 13 is arranged axially displaceable at the cylinder block 1 as shown in Fig. 1. As will be seen, the ball 13 may displace itself in said bore 15. On the other hand by means of the spring 16 the end face of the cylinder block 1 is always held in contact re-

lation with the controlling mirror face **10**. In this respect it is to be noted that the cylinder block may be displaced in its longitudinal direction in order to guarantee the engagement of or contact with the controlling mirror surface and to render ineffective any deviations of the pivot axis **8** from the effective driving disc plane.

From the foregoing it follows that the cylinder block **1** is guided only by means of the centering ball **13**, its end face engaging the controlling mirror face **10**. This is of importance in view of the fact that it is practically impossible to avoid difficulties in the event that the cylinder block is positively guided in the swingable frame **9** as is usual. According to the invention, the said guiding of the cylinder block **1** at its frame **9** results from the contact of its end face on the controlling mirror face so that the danger of clamping of the cylinder block is avoided.

The embodiment shown in Fig. 2 differs from that shown in Fig. 1 therein that the controlling mirror face **10** has a spherical shape instead of the customary plane shape. In order to explain the advantages obtained by this feature in the following the forces existing at the cylinder block end face are considered:

These forces are:

1. The force P_k which is caused by the piston
2. The force P_s which results from the delivery pressure existing in the controlling slit **17**.

In order that the cylinder block **1** continues to engage the controlling mirror the force P_k (with the larger lever arm *a*) must be greater than the force P_s (with the smaller lever arm *b*). The magnitude of the force P_s now depends to a high degree on how the pressure between the tightening surfaces of the controlling mirror **10** and the cylinder block **1** decreases around the controlling slit. Due to this the force P_s is not predetermined so that an auxiliary force P_r is created by hydraulical means for the purpose of compensating fluctuations of the force P_s. The force P_r is thus created that in the cylinder block an equilibrium chamber **10***a* is provided. The pressure in this chamber is controlled in dependence on the distance between controlling mirror and cylinder block.

The force P_r must now be so applied to the cylinder block **1** that it balances the resulting moment of the two forces P_k and P_s. This means that in the illustrated embodiment the lever arm c has a certain length. This must be the longer, the smaller the lever arm *b* of the force P_s is in relation to the lever arm *a* of the force P_k. Thus the necessity results in case of the wellknown plane controlling mirror to seek a compromise between the size of the lever arm *c* and that of the lever arm *b*; because *c* should not surpass the usual dimensions of the cylinder block **1**. On the other hand it is desirable to keep the lever arm *b* as small as possible in order to give a circular form to the controlling opening **18**, keeping in mind at the same time the necessary flow cross-section and a sufficient distance from the controlling opening of the neighboring cylinder bore. In case of a plane controlling mirror one must dispense with the mentioned circular form and give the controlling opening **18** the form to be seen in Fig. 3 due to the relation of the lever arms *b* and c to one another.

The difficulties arising due to this may easily be removed by using a spherical shaped controlling mirror according to Fig. 2, because the explained force-relation is more favourable. Retaining the moment $P_k \cdot a$, the moment $P_s \cdot b_1$ may be made essentially smaller in case of the same force P_s. The torque resulting from these two moments on the cylinder block, which is effective around the ball **13**, is compensated in case of suitable ball radius by a moment resulting from a force P_1 and the lever arm *e*. The force P_1 results from the forces of the spherically constructed controlling mirror. As formerly, a resulting force P_r on the controlling surface remains. As the moments, as proved above, are balanced without the help of the force P_r, this force P_r may now become effective in the axis **2** of the cylinder block. Therefore, it does not necessitate a special equilibrium chamber of greater diameter, this being also advantageous with respect to the friction losses.

Regarding the manufacture, it is further essential in this connection that the controlling openings **18** may be vertical to the controlling mirror in spite of their inclined position in the cylinder block.

The ball form of the controlling mirror also results in a decrease of the diameter *d* of the contact surface of the cylinder block, this being not only favourable with respect to the friction losses, but also has the advantage that the cylinder bores may lead through the entire length of the cylinder block in order to close them afterwards by means of a stop **20** or the like. These lie outside of the controlling mirror surface and, therefore, cannot influence its quality.

It may be pointed out that the transmission device according to the embodiments shown and described operates without the usual cardan joint, because the piston rods themselves serve as moment transmitting member for the cylinder block or the driving disc or flange. For this purpose the play between the pistons and their rods is limited to the lost motion necessary for kinematics as far as possible. It is advisable to keep the auxiliary lost motion between the pistons and their rods for assembly reasons as small as possible. The smaller this auxiliary lost motion is, the lesser the cylinder block lags when actuated by the driving disc or flange and, therefore, the lesser is the disturbing influence due to the fact that upon a lag the piston rods exert turning moments on the cylinder block in opposition to the direction of actuation.

HANS MOLLY.

PUBLISHED

MAY 11, 1943.

BY A. P. C.

H. MOLLY

HYDRAULICALLY OPERATING TRANSMITTING DEVICES OF THE PISTON-TYPE

Filed Jan. 7, 1939

Serial No. 249,805

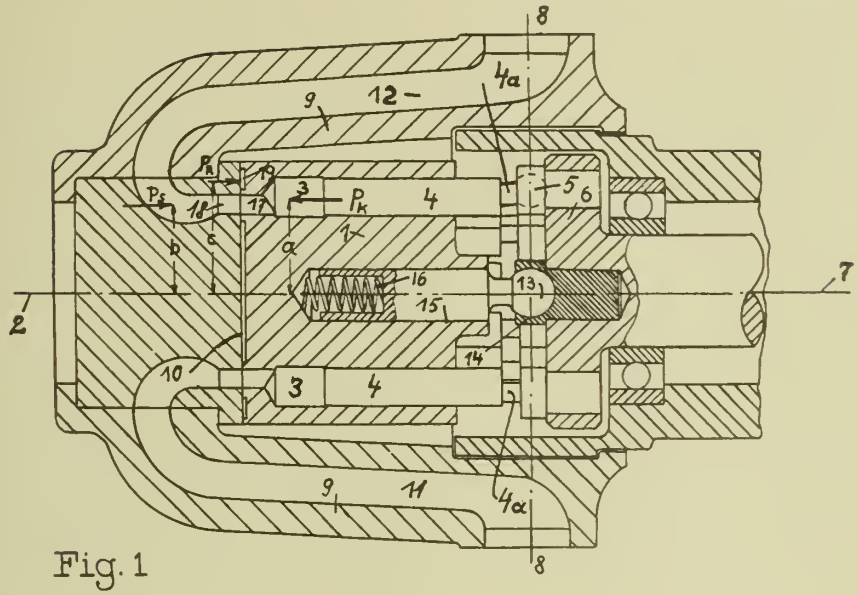

Fig. 1

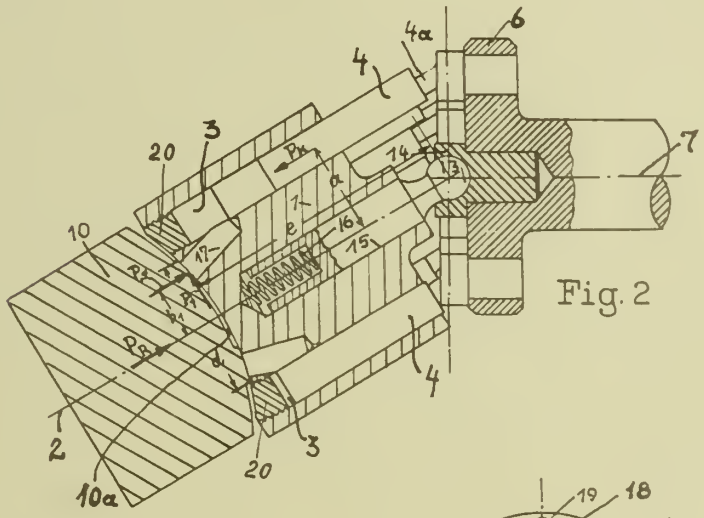

Fig. 2

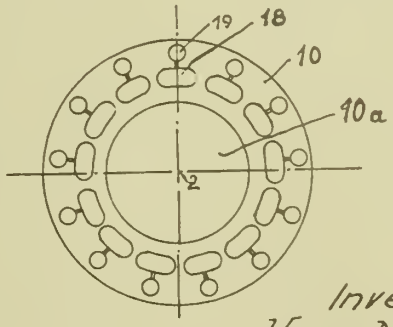

Fig. 3

Inventor:
Hans Molly
By A. D. Adams
Attorney

Published May 11, 1943

Serial No. 250,064

ALIEN PROPERTY CUSTODIAN

METHOD FOR THE MANUFACTURE OF CONCENTRATED DURABLE FLUID SOLUTIONS CAPABLE OF INJECTION, OF MEDICINAL SUBSTANCES WHICH ARE INSOLUBLE OR NOT EASILY SOLUBLE IN WATER

Werner Ursum, Frankfurt/Main, Germany; vested in the Alien Property Custodian

No Drawing. Application filed January 9, 1939

It is known to use urethane as a solvent for medicinal substances which are not easily soluble. However, the concentrations containing hydrous urethane solutions are insufficient so that it has been attempted to increase them by other additions. However, even the concentrations containing such auxiliary means do not exceed practically more than 10%.

It has now been found that the dissolving power of urethane can be increased to an extent which was not at all expected, with the aid of alcohols or their esters. It is thus possible to convert barbituric acid derivatives and many other medicinal substances to 15% or more, in durable solutions.

Whilst it is a question of more or less different substances in the additional solvents hitherto used, partly of those with strong pharmacological effect, in the present method, there is substantially no influence on the medicinal substance brought into solution, at the most, only very small quantities of the alcohol or ester are required as the necessary addition.

Example 1

	Parts by weight
Diethylbarbituric acid	18
Ethylurethane	62
Ethylalcohol	10
Water	10

give a durable solution.

Example 2

	Parts by weight
Phenyl ethyl barbituric acid	25
Ethylurethane	57
Water	7
Glycol	11

give a clear, durable and sterilisable solution.

Example 3

	Parts by weight
Diethylbarbituric acid	20
Ethylurethane	60
Water	7
Ethyl acetate	13

give a clear and durable solution. The following also work:

Example 4

	Parts by weight
Diethylbarbituric acid	20
Ethylurethane	64
Water	8
Amelyne hydrate	8

Example 5

	Parts by weight
Quinine (Base)	30
Ethylurethane	50
Water	10
Amelyne hydrate	10

Example 6

	Parts by weight
Quinine (Base)	25
Ethylurethane	50
Water	10
Glycol	15

Example 7

	Parts by weight
Camphor	30
Ethylurethane	50
Water	10
Glycol	10

WERNER URSUM.

Published May 11, 1943

Serial No. 250,746

ALIEN PROPERTY CUSTODIAN

METHOD AND DEVICE FOR RETAINING THE RADIOACTIVITY OF ALL LIQUIDS INTENDED FOR INJECTIONS

Stephan Klinghoffer, Paris, France; vested in the Alien Property Custodian

Application filed January 13, 1939

The present invention relates to a process for retaining the radioactivity of all liquids intended for injections. The invention also relates to a device for carrying out said process.

It is known that for the treatment of certain diseases by means of injections of radioactive liquids, it has already been proposed to replace the liquids containing radioactive substances by liquids containing radioactive emanations. For the treatment given by means of these latter liquids to be efficacious, it is requisite for the degree of radioactivity of the liquids used to be accurately measured. It is therefore indispensable for the radioactive liquids to be used a fixed and relatively short lapse of time after they have been prepared.

The present invention has for its object a process and a device which enable such liquids to be prepared in the laboratory, and a constant degree of radioactivity to be retained in same for a practically indefinite time, thereby enabling them to be stocked by all chemists.

The process according to the invention is essentially characterized by the fact that it consists in immersing in the liquid in which a constant degree of radioactivity in which a maintained, a device which contains a predetermined quantity of substance capable of producing radioactive emanations, said quantity being so dosed as to maintain the liquid, which has previously been rendered radioactive, in radioactive equilibrium.

Other advantages and features of the invention will become apparent from the ensuing description taken with reference to the accompanying drawing in which Figs. 1 and 2 shows sectional elevations of two embodiments of an ampoule which enables the process according to the invention to be carried out.

According to the embodiment shown in Fig. 1, 1 designates an ampoule of any known type of the kind of those commonly used for medical purposes and provided, in the known manner, with two tapered points 2 and 3.

The degree of radioactivity of any liquid which is contained in said ampoule and is intended for treatments by means of injection, is kept constant by fixing on the inner wall of the ampoule before filling and closing same a thread 4 made of material which is capable of producing radioactive emanations.

The thread 4 is held in position by means of a coating of paraffin, for example.

Instead of being formed in the shape which has just been mentioned, the material capable of producing emanations might be formed in the shape of a stick 8 fixed on one of the points 7 of the ampoule 5. As shown, the ampoule 5 is provided in the usual manner with a tapered point 6.

The volume of the thread 4 or that of the stick 8 is so calculated that the quantity of emanations produced by the material which forms them keeps the liquids contained in the ampoules 1 or 5 in radioactive equilibrium.

STEPHAN KLINGHOFFER.

PUBLISHED

MAY 11, 1943.

BY A. P. C.

S. KLINGHOFFER

METHOD AND DEVICE FOR RETAINING THE RADIOACTIVITY OF ALL LIQUIDS INTENDED FOR INJECTIONS

Filed Jan. 13, 1939

Serial No. 250,746

Fig. 1. Fig. 2.

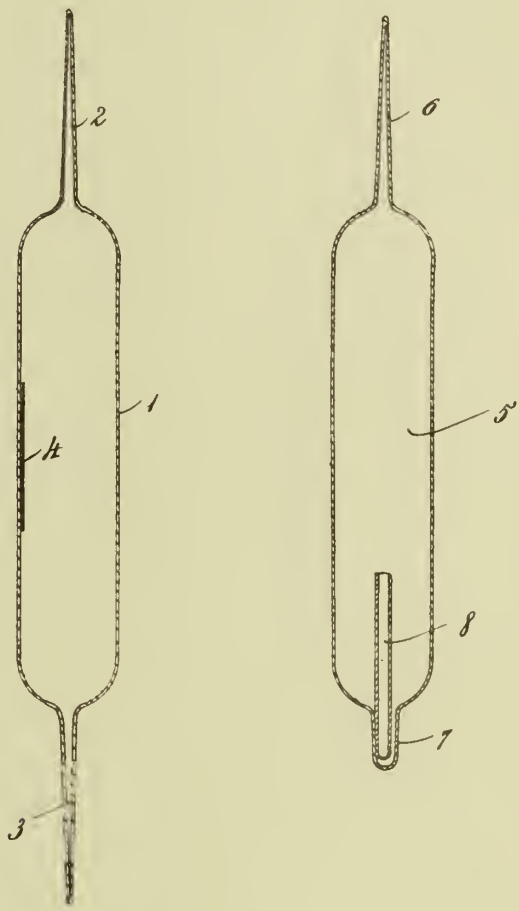

Inventor

Stefan Klinghoffer

J. McWilliams

Atty.

Published May 11, 1943

Serial No. 251,007

ALIEN PROPERTY CUSTODIAN

DIESELMOTOR

Paul Wiebicke, Nurnberg, Germany; vested in the Alien Property Custodian

Application filed January 14, 1939

This invention relates to a Diesel motor designed especially for freight motor-cars, railway motor-cars, and the like, and having, because of these purposes, cylinders with a small diameter and operating with a high number of revolutions. The present improved Diesel motor is characterised by the particular arrangement of the parts important for the injection of the fuel and the combustion thereof. The effect of that arrangement which is fully described hereinafter consists in an extremely low consumption of the fuel, a very good combustion of the same, and very easy and quick starting of the machine. The motor is, besides, distinguished by its simple construction, including a very practical arrangement of all members relatively to one another.

The characteristic features of the invention are the following: The aperture of the fuel nozzle is located about in the plane of that side or surface of the cover of the cylinder which is situated opposite the cylinder, and does not project, therefore, appreciably into the cylinder, nor is it located considerably far behind the said plane in a cavity of the cover. Furthermore, said nozzle aperture is located outside of the axis of the cylinder, and the axis of the nozzle forms an acute angle with the axis of the cylinder. Within the piston is a globular combustion space, the size or capacity of which is such that it is able to receive practically the entire amount of the combustion air in the upper dead-centre position of the piston; the centre of said globular combustion space lies about in the axis of the nozzle. The said combustion space communicates with the interior of the cylinder through a circular aperture, the diameter of which lies between 0,5 and 0,7 of the diameter of the combustion space. That side of the cylinder cover which is located opposite the piston and also the other side of said cover are plane. The axis of said communication, or of the large aperture respectively, which connects the combustion space with the cylinder space lies parallel to the axis of the cylinder and passes about through the centre of the said large aperture or communication.

I am aware of the fact that some of these features are singly known and have been employed in Diesel motors. Thus, for instance, the nozzle has already been arranged at an angle with respect to the cylinder axis in order to render possible to insert it easily into the cylinder cover from the outside of the same and in order to obviate removing the hood which covers the valve levers, as is the case also in the present new arrangement and combination of the parts. Also globular combustion spaces have been used and these spaces have already been provided in the pistons of Diesel motors, but these spaces in the pistons are not of globular shape and the globular spaces which have become known are not in the piston of the Diesel motor, in consequence whereof the favorable effect obtained with the present improved and new combination could not be attained with the older motors.

The characteristic feature also mentioned in the second paragraph of this specification that the combustion space can receive practically the entire amount of the air charge means that the piston approaches, in its upper dead centre position, the cylinder cover as near as possible so as to render the clearance as small as admissible, and that no by-spaces or secondary spaces shall exist which, perhaps, likewise might take up a certain amount of combustion air. The objects sought to be attained in these respects are attained best by employing a cylinder cover having a plane bottom surface and a piston having a plane top surface, as is the case with the present improved Diesel motor.

The diameter of the large aperture or communication mentioned, viz. between 0,5 and 0,7 of the diameter of the globular space is important for the good combustion and for the quick starting of the machine. If said aperture is too small, there then arise strong air currents and eddies when the compressed air enters into the combustion space, so that the temperature of the air contained in the combustion space is practically uniform which is, however, counter to what is desired, viz. that there is in the centre of the combustion space a hot core which arises and is maintained when the compressed air can be displaced from the cylinder into the combustion space without disturbing eddies. The more undisturbed the hot core of the compressed air in the combustion space is, the easier and quicker will the engine start, as the injected fuel will be ignited the more easily, the hotter the air is into which it is injected. If, on the other hand, the said aperture is too large, the eddies arising when the combustion gases escape from the combustion chamber and the speed of the current formed by said gases are too slight to mix the combustion gases with the oxygen of the air and to burn them quickly without any remainder. It has been ascertained by tests that the best effect is attained if the numeral limits stated are observed.

In order to maintain the said hot compression core in the combustion chamber it is also important that the aperture in question has circular shape and that its centre has the particular position stated. The nozzle shall fill the entire globular space with the fuel as uniformly as possible, and it is from this reason that its axis passes through the centre of the globular space when the piston is about in its upper dead-centre position, and that it is arranged about in the plane of the bottom surface of the cylinder cover. In this position the nozzle is very well protected from the heat of the combustion space, and is, nevertheless, located so near to the aperture of the ball that only a comparatively slight injection pressure for the fuel is requisite.

It is known, as regards four-stroke cycle motors with cylinders with a small diameter, to make use, preferably, of only one inlet-valve and only one outlet-valve whereby it is rendered possible to do with simple control members for the valves and with simple actuating means for the same. These advantages can be utilised in a particularly high degree if the nozzle and the combustion space are designed and arranged in accordance with this invention. For the rest, the invention is applicable also in connection with two-stroke cycle motors, as well as with four-stroke cycle motors, irrespective of whether they are controlled by valves or by other known means.

The invention is illustrated diagrammatically and by way of example on the accompanying drawing on which Figure 1 is a vertical longitudinal section through the upper part of a Diesel motor, all members not pertaining to the invention being omitted in this figure. Figure 2 is a plan of the piston of Fig. 1, the circular dotted lines indicating the valves provided in the cylinder cover, Figure 3 is a representation similar to the lower half of Fig. 1 and shows a somewhat otherwise arrangement of the nozzle in the cylinder cover and of the combustion space. And Figure 4 is a view similar to Fig. 2 and shows a plan of the piston of Fig. 4.

Referring to Fig. 1, 1 denotes the piston of the Diesel motor, 2 the cylinder thereof, and 3 the cover of this cylinder. In the piston 1 is the combustion space 4 which has globular shape; 5 denotes the centre of the space 4, and 6 denotes the large aperture in the top of the said space, viz. in the top surface of the piston. The nozzle aperture 7 lies in the plane of the bottom surface of the cylinder cover, and the ejected conical jet of fuel has a cone angle 7*a* which amounts to about 90°. The axis 8 of the nozzle is directed toward the centre 5 of the combustion chamber 4 and forms an acute angle with the axis 14 of the cylinder.

The advantage of this arrangement is that the entire nozzle body 9 lies outside of the hood 10 which covers the driving means 11 for the valves 12 and 13.

As the nozzle aperture lies laterally outside of the cylinder axis 14, it is possible to mount a large inlet valve 12 and a large outlet valve 13, as appears from Fig. 2.

From Fig. 1 appears that not only the nozzle aperture 7 lies one-sided outside of the cylinder axis 14, but this is true also of the centre 5 of the combustion chamber 4. Also this is important as this arrangement entails the favorable possibility to mount the two large valves 12 and 13 mentioned.

With the modification shown in Figs. 3 and 4 the angle between the axis 15 of the nozzle and the axis 16 of the cylinder is larger than with the constructional form illustrated in Figs. 1 and 2. Now, in order to provide that the fuel cone does not contact with the rim or edge of the aperture 17 of the combustion chamber 18, there is provided a small recess 19 below the nozzle aperture. Tests carried out with this arrangement have proved that said recess which interrupts the rim or edge of the large opening 17 has no detrimental effect. It can, in fact, even be assumed that the current of air streaming from the combustion chamber into the cylinder is more strongly compressed just at the place where there is said recess wherefrom an increased favorable effect results as that compression occurs in the proximity of the nozzle aperture.

In every case the gap 20 between the lower surface of the cylinder cover and the top surface of the piston must be as narrow as possible. With a cylinder diameter of 105 mm. it should have, if possible, no larger width than 0.9 mm. The lower surfaces of the valves (12 and 13, Fig. 1) shall lie so closely at the cylinder cover as the service conditions permit.

The tests carried out with a Diesel motor built according to this invention and having four cylinders with a diameter of 105 mm. and a piston stroke of 130 mm. have proved that the fuel consumption is at least by 25% lower than with the present Diesel motors of the same size. There is, thus, great progress and corresponding merit in the invention.

PAUL WIEBICKE.

PUBLISHED

MAY 11, 1943.

BY A. P. C.

P. WIEBICKE

DIESELMOTOR

Filed Jan. 14, 1939

Serial No.
251,007

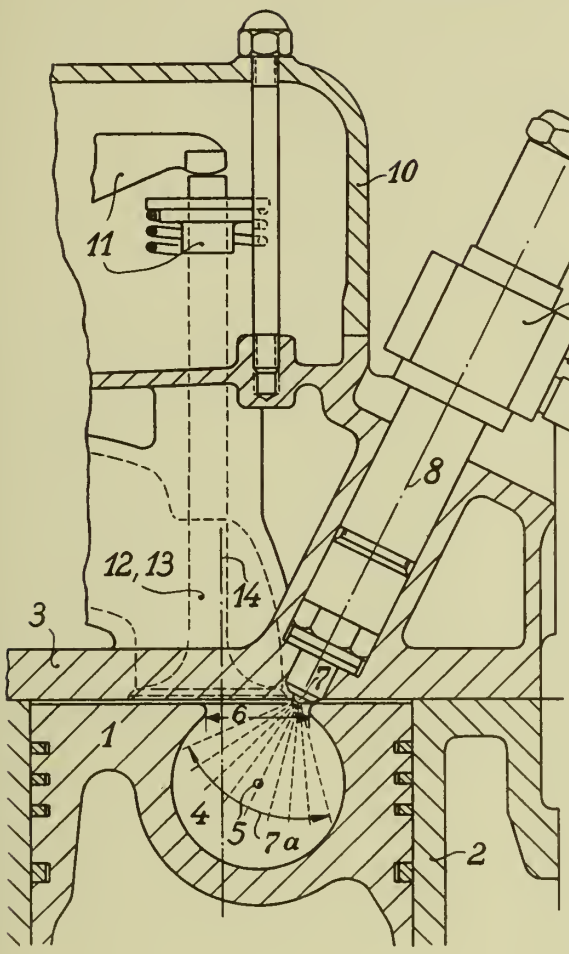

Fig. 1

Fig. 2

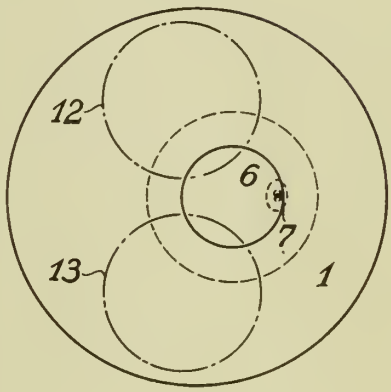

Fig. 3

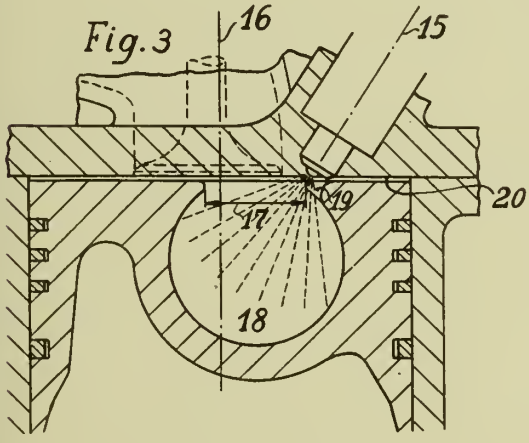

Fig. 4

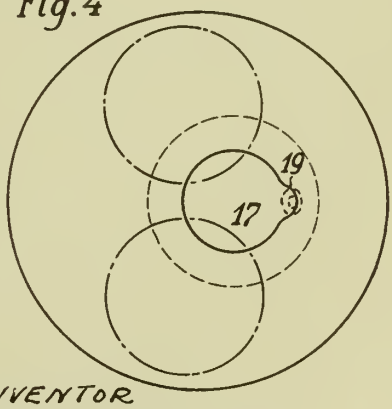

INVENTOR
PAUL WIEBICKE
By Walhauser and Groff Attys

Published May 11, 1943

Serial No. 254,474

ALIEN PROPERTY CUSTODIAN

INTERNAL COMBUSTION ENGINE OPERATING ON A FOUR STROKE CYCLE IN WHICH THE SUPERCHARGING IS EFFECTED, FOR INSTANCE, BY A SUPERCHARGER AND THE INJECTION OF THE FUEL BY AN INJECTION PUMP

Hermann Oestrich, Berlin-Spandau, Germany; vested in the Alien Property Custodian

Application filed February 3, 1939

This invention relates to an internal combustion engine operating on a four stroke cycle in which the supercharging is effected, for instance, by a supercharger and the injection of the fuel by an injection pump.

The power which may be obtained in the cylinder of an internal combustion engine during each power cycle is dependent upon the stress of the cylinder due to heat. This implies that even when the conditions for an increase in power are fulfilled the latter cannot be effected, since it would not be possible to adapt the cooling—regardless of whether a water or air cooling is involved—to the heat developed in the interior of the cylinder in such a manner that the material of the cylinder is not overheated. In this respect the conditions are particularly unfavorable in the case of an aero-engine in which only a limited space is available for the cooling device.

In the case of a two stroke internal combustion engine a considerable increase in the amount of heat exchanged during each power cycle has been made possible by scavenging the cylinder. At the end of the power stroke cooling air is caused to enter the cylinder in which it flows in a given direction, thus expelling the residual exhaust gases. This scavenging brings about an intensive cooling of the cylinder walls so that it is thus possible to attain cylinder powers which are a multiple of the powers of the four stroke internal combustion engines. The direct application of this method of scavenging developed for the two stroke engine to the four stroke engine encounters, however, such considerable difficulties that it has hitherto been impossible to carry this idea into practice.

By the present invention it is, however, possible to attain with relatively simple means considerable increases in power in a four stroke internal combustion engine in which the supercharging is effected, for instance, by a supercharger and the direct injection of the fuel by an injection pump. This is accomplished by the fact that the movements of the intake valve and the exhaust valve occur at spaced intervals so that the exhaust valve opens before the piston reaches the lower dead center and remains open beyond the upper dead center; i. e., during a portion of the movement of the intake valve towards the open position, which results in an overlapping of the open position of the valves before the piston has reached and after it has surpassed the upper dead center and therefore in an effective scavenging of the combustion chamber. The extent of the overlapping referred to the crank angle depends upon the operating conditions of the engine. An overlapping corresponding to a crank angle of about 80° is to be considered as the lower limit.

Here it is to be pointed out that also in the case of the internal combustion engines hitherto employed there results a certain overlapping of the movement of the exhaust valve towards the closed position and the movement of the intake valve towards the open position. This was, however, considered as an undesirable subordinate matter but had to be put up with, since it is practically impossible to suddenly close the exhaust valve at the end of the exhaust stroke which should remain if possible completely open till the end of the exhaust stroke and to suddenly open the intake valve at the beginning of the suction stroke. Owing to the control of both valves a certain overlapping of these two movements is unavoidable.

Furthermore, it is known to effect in four stroke internal combustion engines during the exhaust stroke beginning at the lower dead center and ending at the upper dead center a scavenging with cooling air after expansion of the exhaust gases. This scavenging is effected with the aid of an additional scavenging valve. The latter is opened only after the burnt gases have expanded; i. e., shortly before the piston reaches the upper dead center and remains open only until the piston reaches the upper dead center.

This presents the disadvantage that besides the use of further control parts, such as additional valves, the time available for an effective scavenging is so short owing to the late complete expansion of the burnt gases that an increase in power does not occur, since an effective inner cooling of the combustion chamber is not possible.

According to the invention the overlapping is, however, brought about intentionally and considerably increased as compared to the overlappings hitherto obtained. The purpose is, as above pointed out, to prevent an overheating of the cylinder by intensely cooling the interior of the cylinder so as to increase the power as well as to improve the fuel mixture, i. e. the contents of the cylinder, by a proper scavenging; in other words, to increase the power of the engine to a further extent.

Of considerable importance is, furthermore, the fact that it is possible to vary the magnitude of the overlapping in operation by certain simple means; for instance, by shiftable cam drums in the case of radial engines, one of said cam drums controlling the intake valves and the other the

exhaust valves. In this manner, a means is particularly obtained in order to adapt—together with other devices serving to control the power (for instance, a fuel pump, boost control, supercharger gearing, exhaust gas turbine, throttles etc.)—the operation of the engine and the condition of the cylinder to the requirements of operation. This possibility appears to be of particular importance, since as is well known the pressure conditions before and behind the supercharger and therefore also in the cylinder depends upon the altitude of flight. Since the overlapping of the movement of the control members (valves, slide valves etc.) may be varied, it is possible to take into consideration the variations of pressure in the cylinder resulting from the variations of the altitude of flight.

In the accompanying drawing is shown an embodiment of the invention in which the essential parts of the invention are shown in diagrammatic form.

Fig. 1 is a sectional view of a cylinder of a radial engine provided with its control members.

Fig. 2 is a graphical representation of the movements of the piston and valves.

As will be seen from the drawings, the control of the intake valve 11 and the exhaust valve 12 is effected, for instance, by a drum cam 13 through the cams 14 and 15 in such a manner that a current of cooling air 19 is forced by a blower (not shown) into the cylinder 18 in the direction as indicated by the arrows through the intake pipe 16 and passes through the still open hot exhaust valve 12 and the exhaust pipe 17 into the atmosphere, so that a considerable inner cooling and a proper scavenging of the cylinder is thereby possible. The cams 14 and 15 on the drum cam 13 are so shaped in this embodiment and displaced with respect to each other as to result in the following control periods for the intake valve and exhaust valve as is shown in Fig. 2.

Commencing from point I (Fig. 2) the intake valve is opened about 70° before the piston reaches its upper dead center. The exhaust valve itself was open as will be seen from the circular arc 4, for a time corresponding to about 65° after the piston has surpassed the upper dead center—cf. also the position of the piston in Fig. 1 corresponding to this position—so that a current of cooling air may be forced into the interior of the cylinder before the piston has reached and after it has surpassed the upper dead center through the open intake valve which closes only at a time corresponding to the circular arc 1 of about 70° after the piston has reached the lower dead center, and then passes through the still open hot exhaust valve 12 and the exhaust pipe 17 into the atmosphere. The injection of the fuel through the fuel nozzle 21 begins preferably at the same time or shortly thereafter and then follows the supercharging through the still open intake valve.

As soon as the intake valve is closed the mixture is compressed to the extent corresponding to the circular arc 2—compression stroke—and ignited, for instance, before the piston reaches the upper dead center. The power stroke represented by the circular arc 3 takes place with the valves closed up to about 70° before the piston reaches the lower dead center, the exhaust valve then opens in order to attain in due time a complete expansion of the burnt gases and remains open up to about 65° after the piston has reached the upper dead center as represented by the circular arc 4. The burnt gases are thus expanded upon the opening of the intake valve about 70° before the piston reaches the upper dead center so that the scavenging of the cylinder by the cooling air supplied by the blower (not shown) is effected up to about 65° after the piston has reached the upper dead center through the still open exhaust valve.

The crank path of about 135 to 140° represented in Fig. 2 by the hatched surface is available for the scavenging of the cylinder with cooling air, the overlapping when the piston has surpassed the upper dead center amounting in this embodiment to about 65 to 70°. With a four stroke internal combustion engine controlled according to this principle it is possible to attain an increase in power of about 10%.

If as above mentioned the overlapping of the open position of the valves amounts to about 70° before the piston reaches the upper dead center and 65° after the piston has surpassed the upper dead center, i. e. to 135°; this does not represent the limit value, since it is possible to vary the control periods to such an extent with respect to one another that, for instance, an overlapping of more than 140° may be attained as practical tests have shown. The movements of the intake valve and the exhaust valve towards the open position may preferably amount to a crank angle of 300 to 330°, the movement of the intake valve being preferably displaced with respect to that of the exhaust valve by 180° so that an overlapping angle of approximately 135° or more is obtained.

Depending upon the magnitude of this displacement it is possible, for instance, to vary the overlapping. As already above mentioned the magnitude of the overlapping may be varied in operation, for instance, if internal combustion engines of the radial type are involved, by the use of divided cam drums, one of which controls the intake valve and the other the exhaust valve. This displacement may be regulated either by hand or automatically in accordance with the corrresponding operating conditions of the cylinder.

HERMANN OESTRICH.

PUBLISHED

MAY 11, 1943.

BY A. P. C.

H. OESTRICH

INTERNAL COMBUSTION ENGINE OPERATING ON A FOUR STROKE CYCLE IN WHICH THE SUPERCHARGING IS EFFECTED, FOR INSTANCE, BY A SUPERCHARGE AND THE INJECTION OF THE FUEL BY AN INJECTION PUMP

Filed Feb. 3, 1939

Serial No. 254,474

Fig. 1

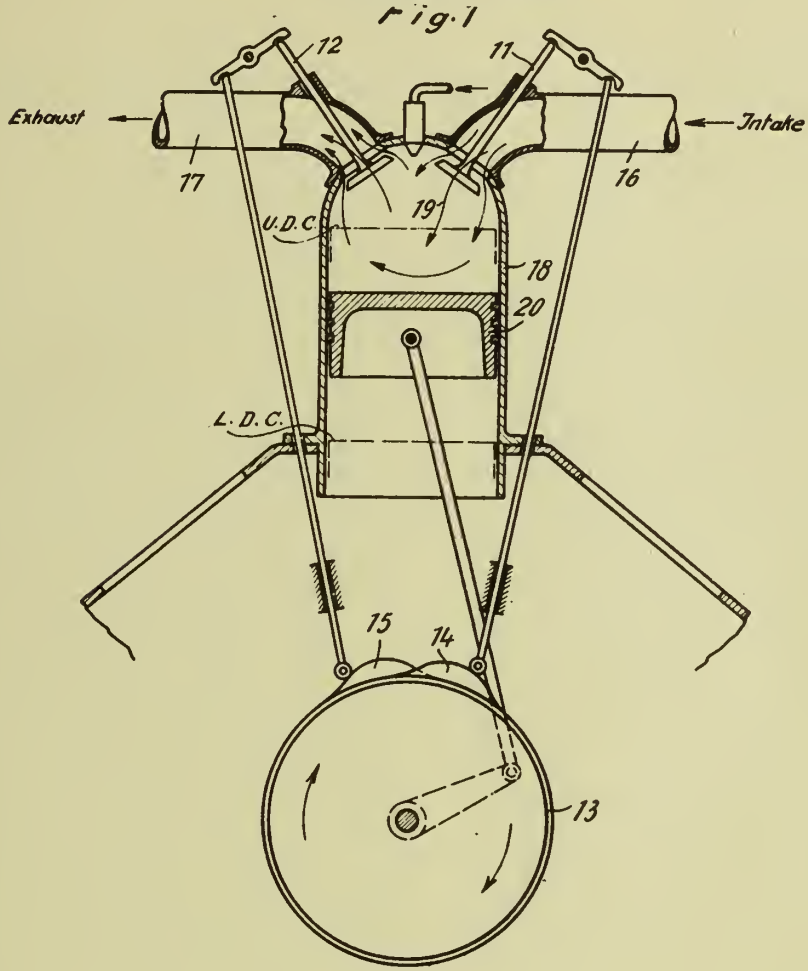

Fig. 2

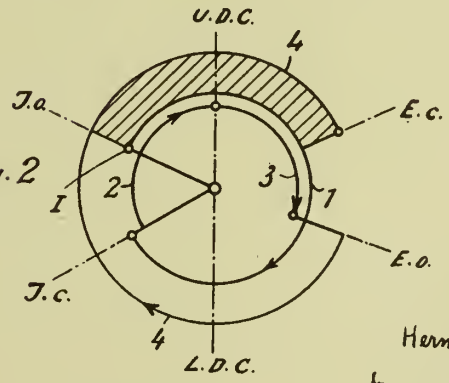

Inventor
Hermann Oestrich
by Knight Bros
Attorneys

Published May 11, 1943

Serial No. 254,575

ALIEN PROPERTY CUSTODIAN

CIGARETTE ROD MAKING MACHINE

Paul Johannes Herrmann, Dresden, Germany;
vested in the Alien Property Custodian

Application filed February 4, 1939

This invention relates to cigarette rod making machines of the wheel and belt type, and has for its object to improve the operation of the same.

It is known that the velocity of the tobacco rod in respect to the velocity of the belt conveying the tobacco rod enveloped by the paper, otherwise called the cigarette rod, as it passes through the rod and paper former, must have a certain relation, if it is desired to make cigarettes of uniform characteristics in respect to thickness and weight.

Heretofore, it has been considered essential, and it was the natural and logical manner, that the tobacco rod, as it leaves the belt, had a velocity less than that of the cigarette rod as it is being conveyed through the former.

This invention is based upon the recognition that the opposite and unexpected is true, namely, that the velocity of the tobacco rod must be greater than that of the cigarette rod. Various kinds of tobacco employed in the manufacture of cigarettes in respect to the length of the fibers, etc., moisture content, elasticity of the fibers, weight of the fibers, etc., require various requirements in regards to the ratio of the two velocities here involved to one another. In practice, the speed of the shaper belt is a given magnitude, because the cigarette length, for example, depends on this speed, since of course the cutting knife cutting into the rod to obtain proper cigarette sizes makes a very definite number of cuts in the unit of time, and therefore the length of the cigarettes can be regulated by a higher or lower speed of the cigarette rod. Accordingly the speed of conveyance of the cigarette rod belt is unchangeably fixed in each individual case, and therefore the speed of travel of the belt which feeds the tobacco rod to the cigarette rod former has to be regulated most exactly, in the first place with due regard for the speed of conveyance of the shaper belt, and secondly with due regard for the other circumstances in each instance, particularly the quality of the tobacco which is to be used in manufacture.

The invention has for its particular object to provide means for varying the velocity of rotation of the belt wheel in respect to the conveyor belt of the cigarette rod, and consists in the combination of a wheel belt cigarette rod making mechanism with the speed change gear system to enable the velocity of the belt and wheel to be variable in respect to the velocity of the cigarette rod conveyor belt, as conditions of operations require, under maintenance of greater delivery velocity of the tobacco rod than the velocity of the cigarette rod conveying means.

The invention will be further described, embodiments will be shown in the drawings, and the invention will be finally set forth in the claims.

In the accompanying drawings:

Figure 1 is a front view of a known wheel belt cigarette rod making machine, combined with a variable speed changer;

Figure 2 is a front view of a different type of machine, combined also with a variable speed changer; and

Figure 3 is a detail view in section of the tobacco feed mechanism supplying the tobacco to the belt, taken on either line II—II of Figure 1, or line II—II of Figure 2.

Similar characters of reference indicate corresponding parts throughout the various views.

Referring to the drawings, and more particularly to Figure 3, the tobacco is received on the belt **1** passing over the roller **3**, from which it is discharged upon a belt **4** which is shaped into a cup or into U-shape by a former **2**, at a part of the passage of the belt **4**, in order to receive the tobacco. As the belt **4** meets the wheel **11**, the tobacco on the belt enters the peripheral groove **12** in Figure 1, and the belt flattens and remains flat during its contact with the wheel for about one-half of its circumference. The tobacco is formed into a rod and emerges from the groove of the wheel at the bridge **13**. Here it is formed with a paper **16** passing over the roller **17**, by a former **14**, into a cigarette rod, and this is moved by a belt **15** to the knife or cutter device **22** where the rod is cut into sizes corresponding to cigarettes, and by the device **23** conveyed further in a line of travel for further conveyance.

The belt **4** having discharged the tobacco rod to the bridge **13**, is passed over the rollers **7**, **8**, **9** and **10** to a roller **5**, and again is formed U-shaped, and receive tobacco as described.

In the form of apparatus shown in Figure 2, the belt **4** as it leaves the former **2** is acted upon by a compression wheel **42**, which presses the tobacco on the belt into a rod, which then is enveloped by the paper **16** and formed by the former **14** into a cigarette rod. Such a construction is well known and is not claimed herein as new, and therefore need not be further described.

The main drive motor **24** drives the main driving shaft **25**, from which, by means of a bevel gear system **26** and **27**, a spur wheel **28** is driven.

The main driving shaft **25** also drives the belt **15** for conveying the cigarette rods to the cutter mechanism **22**, by means of a pulley **21** over

which the belt 15 passes. Rollers 18, 19 and 20 are provided, over which the belt 15 passes. The pulley 21 is on a shaft 21*a*, to which a gear 35 is secured which meshes with a gear 34, on a shaft 34*a*, to which a pinion 33 is secured, which meshes with a pinion 32 on the shaft 25. Thereby, the speed of the main shaft is directly transmitted to the pulley 21 and belt 15. The peripheral speed of the pulley 21 can be changed by changing the diameter of the pulley 21, in a known manner, but here we are concerned only with velocity changes in different or various limits, and the adjustment of a relatively small disc.

It is of importance to vary the velocity of rotation of the wheel 11, since its operation in making the tobacco rod is dependent upon variable factors, and which requires that the velocity of the ejection of the rod be greater than the velocity of the belt 15.

Between the gear 28 driven by the main driving shaft 25 through the bevel 26, and the gears 31*a* and 31*b* of different diameters which are secured to the shaft 31 of the wheel 11, there is a gear 29 which meshes constantly with the gear 28. The gear 29 has a shaft 29*a* which engages a slot 30 of a scissor member or sector 30*a* which is pivoted to the shaft 28*a* of the gear 28. By the movement of the member 30*a* the gear 29 is moved, so as to engage either the gear 31*a* or the gear 31*b*. Thereby, the speed of the wheel 11 and the consequent formation and outward thrust of the tobacco rod may be varied as is required by the characteristics entering into the making of a proper and uniform cigarette rod.

The same variable speed structure is shown in Figure 2, and by it, in Figure 2, the peripheral velocity of the belt traction wheel 36 is controlled, and hence the velocity of the belt 4 in respect to the velocity of the belt 15 for the cigarette rod.

In Figure 2, the compression roller 42 is driven by a bevel on the shaft 41*a*, engaging a bevel 40, on an upright shaft 39, to which a spiral gear 38 engaging a spiral gear 37 on the shaft 31, is applied.

By the provision of the variable speed changer, actuating the wheel 11 on the one hand, and actuating the wheel 36 and the compression wheel 42, on the other hand, (the compression wheel 42 corresponding to the extended belt from roller 6 to roller 7, and to the roller 7, in Figure 1), the tobacco rod is given a velocity greater than that of the belt 15, and the velocity of the tobacco rod as it emerges from the wheel 11 or belt 4, can be varied and instantly controlled, without changing in any manner the peripheral surface of either wheel 11 or wheel 36. Adjustment of speed by adjustments of segments in the wheels 11, 36, which change their diameters, are entirely obviated.

It has been seen that in both forms of machine, Figure 1 and Figure 2, the tobacco is first formed by a belt 4 in a former 2, and then either by a known grooved wheel 11, or by a known compression wheel 42, is shaped into a tobacco rod, to be enveloped by a paper to form a cigarette rod, which is conveyed to a cutter 22 by an apron or belt 15. As the velocity of the belt 15 and emergency thrust velocity of the tobacco rod require control, the means disposed between the drive shaft 25 and the shaft 31 enable the emergency thrust velocity of the tobacco rod to be varied and controlled in respect to the velocity of the conveying belt 15. Thereby the speed of the tobacco rod can be placed in a definite ratio to the speed of the conveyor belt 15, running in the former for making the cigarette rod, and cigarettes of uniform quality as regards density and weight may be obtained.

The invention then consists of the cooperation of a main driving shaft with a cigarette rod former conveying belt and with a tobacco rod forming belt, whereby the velocity of the tobacco rod forming belt is greater than the velocity of the cigarette rod forming belt, and with means for varying, without changing the diameter of the wheel determining the velocity of the tobacco rod belt, the velocity of the tobacco rod forming belt in respect to the cigarette rod forming belt. This being the cooperative law governing the action of the correlated parts, it is clear that the particular means shown and described as varying such velocities, as the gear 29, etc., may be substituted by means working in substantially the same way to carry out the cooperative law set forth. As the speed of conveyance of the cigarette rod has to be substantially unchangeably fixed in each individual case, as it depends upon the operation of the cutter which has a speed of cutting fixed by the length of the cigarettes, the speed of travel of the belt which feeds the tobacco rod to the cigarette former has to be regulated most exactly, in the first place with due regard to the formation of the cigarette rod, and secondly, with due regard to the quality of the tobacco used in the making of the tobacco rod.

PAUL JOHANNES HERRMANN.

PUBLISHED

MAY 11, 1943.

BY A. P. C.

P. J. HERRMANN

CIGARETTE ROD MAKING MACHINE

Filed Feb. 4, 1939

Serial No.
254,575

Fig.1

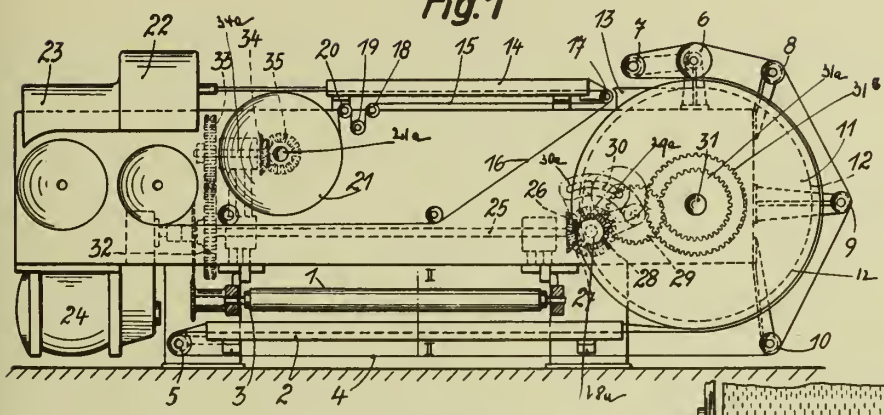

Fig.2

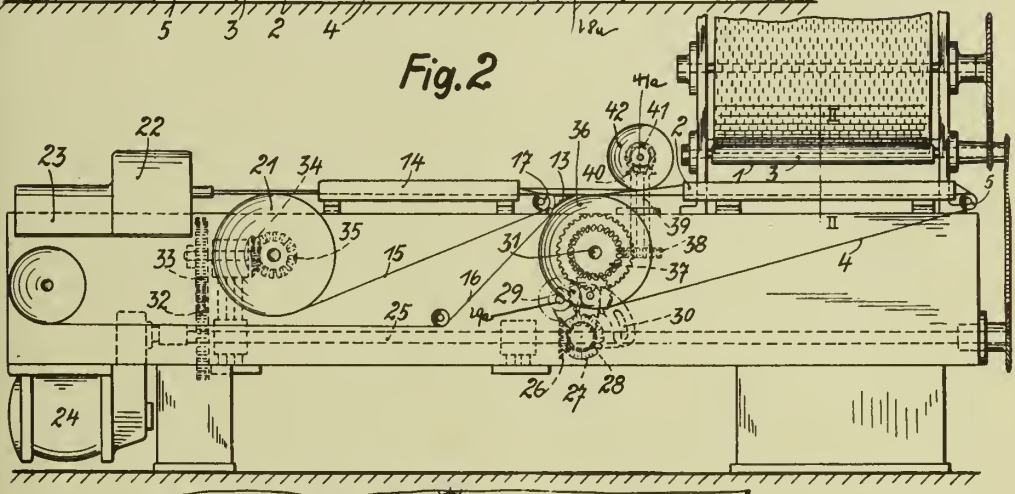

Fig.3

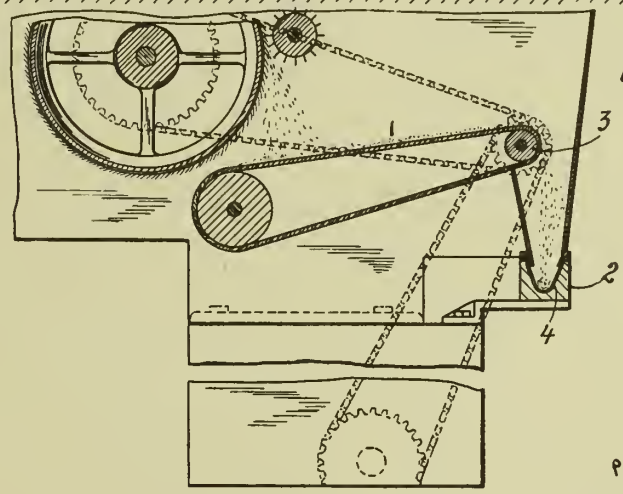

INVENTOR
PAUL J. HERRMANN
BY C. P. Goepel.
ATTORNEY.

Published May 11, 1943

Serial No. 254,631

ALIEN PROPERTY CUSTODIAN

REGULATING ROLLER FOR MACHINES SOWING IN ROWS

Enrico De Visart, Pombia, Italy; vested in the Alien Property Custodian

Application filed February 4, 1939

Object of the present invention is an improvement in the construction of any type of agricultural machines for sowing in rows.

This improvement has been suggested by direct experiences in the wheat cultivation on dry grounds. In these workings elected sorts of wheat have been used, plentiful and seasonable manuring, deep and accurate working of the ground to make it very soft for sowing has been accomplished, and, in order to obtain high productions, seedings were dense and executed with selected, expensive seeds that, of course, must not be wasted. On the other hand, though disposing of the best seeds and of the best sowing-machines, the sprouting was always a little scanty and behind with regard to tests made contemporarily in an experimental field, with a hundred seeds.

In the grounds made very soft through working, the sowing depth was not well controllable and certainly little uniform, especially for excessive sinking of the seeds here and there. The same inconveniences have been noticed in watery grounds, made too soft and muddy by a rainy season at the moment of wheat sowing. And also in many other grounds and even with the excellent furrowing devices "with double disc" that penetrate easily in any ground and that can work well in the same grounds, when they are, on the contrary, a little hard on the surface.

It is well known the capital importance of the coefficient "depth" for a good sowing, as the superficial, uncovered seeds are exposed to every unfavorable condition, while those that lie too deep germinate behind time and with a scanty efficiency.

The realisation of the present invention consists in the application of rollers, one for each row, to the furrowing apparatus of any type (with simple or double disc, with sickles or similar). The most perfect result that makes a sowing-machine suitable for any solidity and type of soil is obtained, in a more general and complete way, with the application of rollers to the double disc furrowing devices. Said rollers substitute the chains or other means on the different types of known sowing-machines, which are used to cover the seeds. These rollers, besides covering the seeds in the best way and pressing perfectly the earth previously well mangled and pressed a little against the seeds (better than passing a second time with a roller), have the more important function of regulating and maintaining the thickness and homogeneity of the earth recovering the seed (sowing depth) constant at any moment of the working, or in every part of the field, even if with surface irregular and not well prepared. This uniformity in covering the seed with the earth is obtained, according to the present invention, whatever the resistance the ground offers to the furrowing devices may be, this resistance being always variable. On the contrary, with the machines without rollers hitherto used, it is the soil conditions (difficult to be controlled) that fix the sowing depth, whatever the regulation of springs, weights, or any other device, may be. With the regulating rollers, however, this depth is regulated so as to have a thickness of covering earth from 1 mm. to 8 cm., suitable for any cultivated plant.

The appreciable advantages of this device, as well as the operating characteristics result more apparent by the following description, in which it is referred to the annexed drawings, in which:

Fig. 1 is a longitudinal complete view of a furrowing device improved by the application of the regulating roller and suitable to be used on a sowing-machine with a double disc furrow.

Fig. 2 shows a plant view of the ground sowed by one of the double disc furrowing devices provided with the regulating roller and mounted on a sowing-machine with double disc furrowing device.

As shown in Fig. 1, the device, object of the present invention consists in a roll or roller **1** rotating around a pivot, with a tyre breadth being a little greater than that of the furrow, in which the seeds fall; the roller **1** is supported by two parallel jaws **2**, at the ends **2'** of which said roller rotates around a suitable pivot, whilst at the other end the jaws may rotate around a pivot **2''** arranged at the connextion point with the furrow discs **3**. In such a way the roller may describe an arc with the center on the pivot **2''**. In order to set the roller and its support at the desired height above the furrowing device, a fastening device consisting of two flat, circular-shaped and slotted members **4''** and **4'** with a fastening screw **5**, is provided. The deplacement upward and downward of the roller could be done also differently by making the whole support sliding on rectilinear guides, on which it may be fixed at the desired height by means of a screw. A steel blade **6** assured with screws to the support **2** and folded so that the free side being sharpened and wedge-shaped, and touching nearly the rotating cylindrical surface of the roller for automatic taking off the earth that eventually gets attached there, is provided.

Some springs and variable weights are applied

in 7 on the furrowing devices for push downwards as they rotate around 8 (pivot and bolt connecting the furrowing device to the sowing-machine), the said devices, in order to penetrate the furrow into the soil. Said springs and weights may be regulated so that the push be a little greater than that which is necessary for the desired sinking (punctuated line 9 in Fig. 1). Whenever the sowing depth has to vary, the roller must be adjusted, in order to obtain the desired depth. This is easily obtained by deplacing it as far as to the position (punctuated line 15 in Fig. 1), in which, leaning on the ground, the furrowing devices penetrate into the ground to the desired sowing depth. Then, put into action the sowing-machine (the arrows 16 indicate the running direction), the furrowing devices trench the furrow 10 (Fig. 2) in the soil, on the bottom of which the seeds 11 fall (through the hole 12 of the support 13 of the furrowing discs); successively the roller runs on both the sides of the furrow, and closes the same, pressing the earth a little on the seeds. During the running of the sowing-machine the irregularities of the soil surface acting on each sowing row, or on each roller, independently of the others, force each roller to rise, where the ground makes a hump and to sink where the ground is lower. But the inner excavating end of each furrowing device, being connected and driven by the relative roller, is deplaced upward and downward solidly, tracing a parallel curve to the traced one by the roller sliding on the ground, and the layer of earth between the parallels has always a constant thickness (constant sowing depth).

The roller, however, penetrates also a little into the ground, for the greater or smaller pressure exerted upon it and upon the furrowing device connected to the roller, by the weights or the springs of the sowing-machine (in Fig. 2 the contact area of the roller with the ground is shown by hatched lines in 14). The resulting small furrow (with rectangular cross-section, having the aspect of wheel track) is normally of unimportant depth; at the first rain it disappears completely. If, however, it is desired to accentuate this furrow, to make it permanent and to constitute in this way a real sowing in furrowed rows, which in many cases is extremely useful and not practicable with the ordinary sowing-machines, there is but to augment the pressure of the springs or weights in 7 in conformity with the depth that is intended to give to the furrowing of the rows. The application of the rollers regulating the sowing in rows, is adapted to any ground and seed, included those minute seeds, for which nowadays are constructed special sowing-machines; in this way, especially by the combination of the double disc furrowing devices with rollers, any sowing-machine does a perfect work with guarantee of a practically total germination of all the seeds, with any condition of ground and with possibility of obtaining also thick seedings, without dissipation of expensive material.

The different parts described in the showed embodiment of the invention will have demonstrative and not restrictive sense, and they may assume different dimensions and forms for different types and dimensions of the machines, with which they have to be connected. It is understood therefore that any constructive change brought to the particulars of the device based upon the above exposed principles, has to reenter the field of the present invention.

ENRICO DE VISART.

PUBLISHED E. DE VISART Serial No.

MAY 11, 1943. REGULATING ROLLER FOR MACHINES SOWING IN ROWS 254,631

BY A. P. C. Filed Feb. 4, 1939

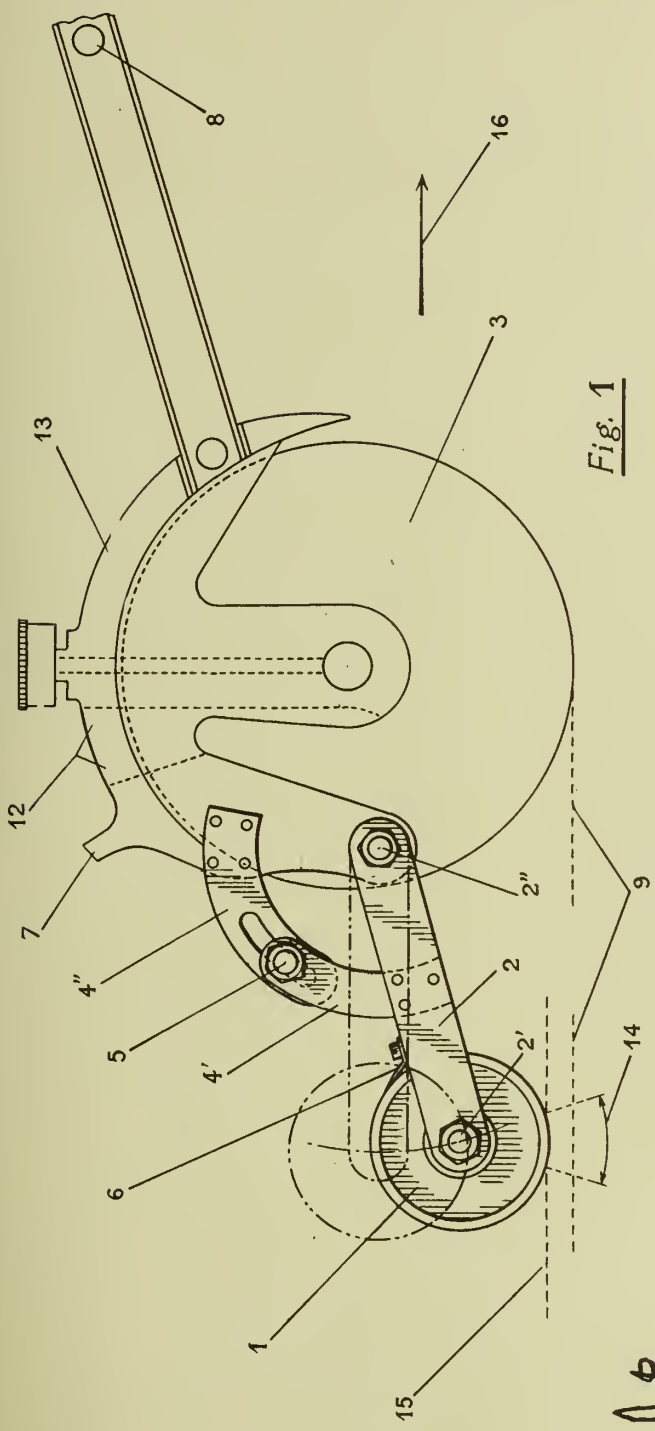

Fig. 1

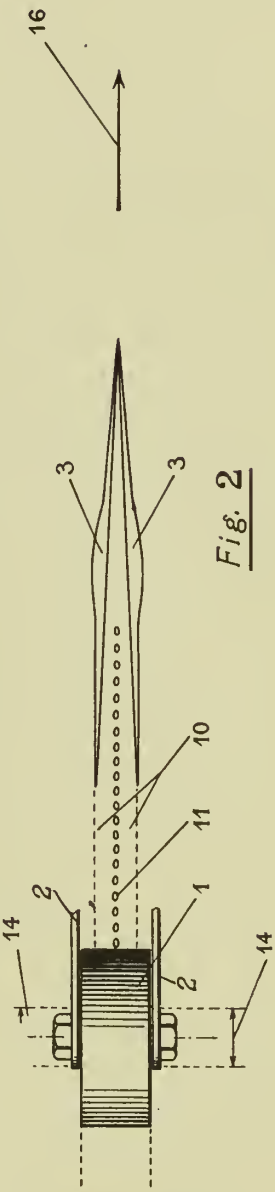

Fig. 2

Inventor

Dott Bruno De Visart

Published May 11, 1943

Serial No. 254,967

ALIEN PROPERTY CUSTODIAN

PROCESS FOR MAKING FROTHS CONTAINING HYDROCYANIC ACID

Leo Löwenstein, Berlin-Wilmersdorf, Germany; vested in the Alien Property Custodian

No Drawing. Application filed February 6, 1939

Hydrocyanic acid is used in large quantities for combating agricultural pests and is employed for this purpose in various forms. In most cases it is used as gas, either out of bottles or by production from chemicals at the place of use. The plants on which it acts must either be in closed spaces or they must be covered by tent awnings in order to keep the hydrocyanic acid gas near to the articles being gas-treated for a sufficient time. Liquids containing hydrocyanic acid have also already been sprayed on to the plants to be treated with gas. Further froths have already been prepared which contain hydrocyanic acid gas.

The formula put forward by Haber applies to the action of hydrocyanic acid; according to it in the poison action of gases in general the product of gas concentration and time of action is constant. Working will be most economical, therefore, i. e. the smallest possible quantity of hydrocyanic acid will be used, if as little gas as possible is permitted to act for as long a time as possible. Apart from the action in closed spaces, this principle can be followed to only a very limited extent in the case of the above-mentioned methods. The tent awnings do not permit a sufficiently high concentration being maintained for a fairly long time. When spraying with solutions, the gaseous hydrocyanic acid is soon volatilised after the drying. This also is the case if the hydrocyanic acid is brought on to the plants in a foam according to the previous proposals.

If the gas containing hydrocyanic acid is dispersed in known manner in the aqueous solution of a froth-former, the froth breaks down in the open after a short time. This also is the case when the gas is formed chemically in the solution, e. g. by decomposition of bicarbonate by means of substances having acid action.

Applicant has now found that in contradistinction to the known methods gas treatment with hydrocyanic acid can be applied to plants in a particularly efficient, simple, economical and certain manner if the procedure is as follows: The hydrocyanic acid is dissolved in water in the form of calcium cyanide, the water containing a froth-former; such as for example saponin. Air or some other gas is then dispersed in this solution, whereby a froth is formed. Although saponin has been proved to be most advantageous as froth-former, the process can also be carried out with other known froth-formers. It is of course important that no jelly-like or pulpy masses permeated with air bubbles form, but proper froths having a honeycomb-like structure, the wall thickness of the bubbles of which is small in comparison with their diameter. The said diameter also should be as small as possible, i. e. the froth should be as fine-bubbled as possible. It has been found that such froths have the best stability.

As is well known calcium cyanide reacts with water to form hydrocyanic acid and calcium hydroxide. It has been found that the latter immediately lodges in the thin walls of the froth bubbles, as a result of which the froth is greatly strengthened. It was not to be foreseen that the two processes of decomposition of calcium cyanide and distribution of the lime particles in the walls would so act together that this effect is produced.

The calcium cyanide can be introduced as such into the solution to be frothed. It may, however, also be formed in known way in a solution of alkali cyanide and a corresponding quantity of a soluble calcium salt.

The stability of the froth may also be raised by adding additional lime in the form of milk of lime to the solution before the frothing up. It has been found that the added lime particles together with the lime particles forming from the calcium cyanide lodge in the walls of the froth cells. The lime content should be such that, together with the lime forming from the cyanide, it amounts to 2–4% by weight of the froth-forming liquid.

Instead of these lime particles also other small solid particles, such as for example alumina, may be lodged in. However lime particles have proved to be best.

It has further been found that the froth may also be prepared by blowing hydrocyanic acid as gas into the liquid containing the froth-former and milk of lime during the froth formation. A froth then forms containing hydrocyanic acid in the liquid and gaseous phases, and in the wall texture of which the small lime particles are lodged.

The agents found suitable for the stabilisation of fire extinguishing froth may be used for stabilising the froth, such as for example gelatin, glue, starch and so forth.

It has also been found that an addition of calcium chloride is very favourable. This addition has a double effect. On the one hand it has been found that the stability of the froth is very much increased, and in fact far more than by dissolution of any other salt, or the substances such as glue and so forth, proposed in the froth extinguishing art for froth stabilisation. Further, the drying out of the froth is very much

protracted thereby, as a result of which the retention of the hydrocyanic acid in the froth and consequently the action of the acid is very much promoted. An addition of 10% by weight of calcium chloride to the solution is already sufficient to bring about these favourable results.

The mechanical carrying out of the froth formation by dispersing air in the liquid to be frothed is effected in known manner by beating, whisking, injection of air or gas in fine subdivision through filter thimbles and the other methods proposed more particularly for fire extinguishing.

It has been found that after the application of the froth, liquid frequently flows off for some time which contains the active constituents contained in the froth in the same concentration as the froth. As a result the efficiency of the froth is reduced accordingly; further in this way hydrocyanic acid can reach places where it might have a harmful effect. It has now been found, however, that this drawback can be removed by allowing a certain time to elapse between the formation and the application of the froth. This time must be sufficiently long for the froth to give up the surplus liquid. For this purpose, either the froth is allowed to stand for a number of minutes, or the apparatus is so formed that the froth requires a certain time to travel through it to the exit thereof. This for example may be effected by choice of the width of the leading tube or by inserted intermediate reservoirs. During this time the surplus liquid flows off so that the applied froth no longer gives up liquid. The liquid flowing off from the froth is not lost however, as it can be used for forming fresh froth.

It has further been found that for the froth to be suitable for the aforementioned purposes the nature of the production thereof is of essential importance. It has been ascertained that a froth which is made by rapidly moving solid bodies in known manner in the liquid to be frothed, such as happens in the case of whipping, whisking and so forth, is substantially better suited for the said purposes than a froth which is made by means of filter thimbles or according to some other process.

For example, a liquid with 0.5% of saponin, 1.5% of calcium cyanide and lime in suspension yielded on injecting air through a very finely-pored filter thimble a froth weighing 9 grams per 100 ccs. After one hour there were still 3 grams present as froth, and after 75 hours there were still about 1 gram with a volume amounting to about $\frac{1}{10}$th of the original volume.

When on the other hand the froth was produced by whisking, 100 ccs. of the froth weighed 16 grams and after one hour still weighed 12 grams, whilst after 100 hours there were still 5 grams of froth present, having a volume of 80 ccs.

It has further been found that a froth made by means of filter thimbles or in some other way can be so improved by the motion of solid bodies therein, such as for example by whisking, that its quality corresponds to the quality of the froth produced right from the start by the motion of solid bodies, i. e. by whipping, whisking and so forth.

Experiments have shown that froths which have been made in accordance with the foregoing description, and in the case of which round about 1.5% by weight of calcium cyanide and 0.5% by weight of saponin have been added to the liquid, remain maintained for several days in the open on plants of different kinds. It is therefore possible completely to kill off the pests coming into question without doing any damage to the plants. After the froths had acted for several days, even in the case of unfavourable weather, the hydrocyanic acid had completely disappeared. More particularly it was found that these froths penetrate better and more deeply than ordinary aqueous solutions, so that they are therefore particularly suitable for treating barks having deep cracks and crevices.

LEO LÖWENSTEIN.

Published May 11, 1943

Serial No. 255,779

ALIEN PROPERTY CUSTODIAN

METHOD OF PRODUCING VERY THIN SILK PAPER

Wolfgang Holthof, Worms A. Rheim, Germany; vested in the Alien Property Custodian

No Drawing. Application filed February 10, 1939

This invention relates to a method of producing very thin silk paper.

It is an object of the invention to produce very thin paper of the type known as silk or cambric or tissue paper, which is equivalent to the so-called Japanese or India paper.

Another object of the invention is to produce such a paper from suitable long-stapled fibre materials, such as, artificial silk, cellulose wool, linters or mixtures of such substances, which are inexpensive and everywhere available.

A particular object is to produce such paper in large size sheets and endless sheets.

A special object of the invention is to make thin silk paper which is suitable for the production of permanent stencils for manifolding or duplicating apparatus, and more particularly to render possible the production of such stencils in a continuous automatic or mechanical process.

Various kinds of cellulose wool are available which are equivalent to the conventional raw materials used for the production of Japanese paper, more particularly regarding the length of staple and the titre as well as regarding the curling or curliness and the felting capacity of the fibre which is an important expedient for the production of very thin paper sheets.

However, it has been found that it is very difficult to produce a suitable silk paper by the conventional method of dipping a paper sieve into a suspension of very low concentration of such fibre material in water in which binders are dissolved. The production of larger or endless sheets is impossible with this dipping method.

Now, I have found that very good results can be obtained by first spreading out the fibre material on endless belts or sieves in the form of a thin web and then applying thereto for example, by spraying, sprinkling or another suitable impregnating method, a suitable binder that has been dissolved in water or other suitable solvents; the fibres when dried are felted and stuck together in the form of a thin sheet of paper.

Suitable binders are, for example, aqueous solutions of glue, gum arabic, starch, tragacanth gum and the like. Also, substances such as artificial and natural resins which are not soluble in water may be used in the form of solutions in spirit, benzene or benzol or other suitable non-aqueous solvents.

Machines for producing very thin fibrous webs from fibre materials are well known and developed to a high degree of perfection, for instance, in the spinning industry, so that it will be easily possible for one skilled in the art to produce endless webs of the kind required in my novel process. For the same reason, it will not be necessary to illustrate my novel process by a drawing.

It will thus be understood that my invention renders it possible to produce from cellulose wool, artificial silk, linters or mixtures thereof large size sheets or endless bands of very thin silk paper, which is at least equivalent to Japanese paper, in a continuous process and such sheets or bands can be used for producing permanent stencils for manifolding apparatus in a mechanical operation. Of course, such mechanical operation is greatly superior to the process of impregnating the single small sheets of Japanese paper so far available individually with the film producing substance, in the manufacture of the said permanent stencils.

WOLFGANG HOLTHOF.

Published May 11, 1943

Serial No. 255,866

ALIEN PROPERTY CUSTODIAN

PROCESS FOR PRODUCTION OF PLASTIC PLYWOOD

Louis Charles Frédéric Péchin, Louvain, Belgium; vested in the Alien Property Custodian

No Drawing. Application filed February 11, 1939

The invention relates to the production of plastic plywood.

It is known that plywoods are generally formed of thin sheets or laminae, often from different species of timber trees, which are so glued one upon another, that their grains are crossed and by using caseine or albumin containing or other glues, said glues causing subsquently many inconveniences such as ungluing, formation of blisters and so on. Further, the compound material so obtained has only a uniform rigidity.

The object of the present invention is to provide a method of producing plywoods, or simply veneer woods, by using a new process, utilising new technics and making possible new technical applications.

The method of producing plastic plywood consist of:

(1°) Using as wood to be glued, thin sheets or laminae previously impregnated with synthetic resins, said impregnating resins having been hardened or polymerised within the wood fibres.

(2°) Preparing specially said laminae by fixing into each of them, but by pairs, different hardness or suppleness indexes.

(3°) Obtaining plywood structures or assemblies, by gluing together:

(*a*) Unimpregnated woods with impregnated woods having similar hardness indexes;

(*b*) Woods, which have all been impregnated and with similar hardness indexes;

(*c*) Unimpregnated woods with impregnated woods having different hardness indexes;

(*d*) Woods, which have all been impregnated, with different hardness indexes.

(4°) Using as glue for binding the laminae or wood pieces together, synthetic resins improved by supplying substances or synthetic or ordinary resins, specially prepared for this purpose.

(5°) Interposing between the laminae, a quantity of so prepared synthetic resin, in the width whereof a resistance wire, metal sheet or copper-nickel wire trellis is imbedded, or, alternatively, covering the obtained piece or the external surfaces of the formed material with wires, metal sheets or trellis or the like, leather, fabrics etc. while using said resin as adhesilve film.

(6°) Covering all external surfaces with a more or less thick film of said resins, and polymerising said film in any known manner.

The present invention makes thus possible to obtain veneer woods or plywoods having new qualities giving the possibility of new technic applications, amongst which it may be mentioned:

First example: By gluing together previously impregnated laminae, with the same product as has been employed in their impregnation, there is obtained not a simple increasing of the contact points, but the formation of an absolutely homogeneous body, through solidication of all the resin which is contained within said body or brought for the gluing, and that, without any surface tension; the material so obtained forms positively an assembly or structure whose laminae are inseparable.

Second example: Semi-hard laminae, then very pliable laminae, further very hard laminae, and so on are glued by pairs on a central impregnated and rigid lamina or sheet: a body or structure is obtained having a very great resistance to shock, rupture and crushing, the very pliable laminae causing among other things the vibratory waves and the penetration of foreign bodies to be stopped in spite of their initial projection velocity.

Third example: Impregnated laminae with very high hardness index are glued on a central unimpregnated lamina or sheet. The material so obtained will have such differences of density in its composition, that it will be possible, especially for the construction of aircraft propellers, to annihilate the vibrations of the centre and even to completely suppress these axial vibrations. Further, in this case the gluing of the laminae is no more a phenomenon of molecular attraction through intimate contact, since the impregnation product which has run through the treated laminae is the same as the adhesive product emanating from the same chemical substance specially prepared for this purpose.

Fourth example: Hollow bodies, such as ship hulls, are formed with previously impregnated laminae, which are still supple after their impregnation; on these bodies are glued in opposite directions and with the same resinitic impregnating product laminae having higher hardness indexes; thereafter the whole is completely polymerised in an usual manner.

Fifth example: In the fabrication of the hollow bodies and before the last lamina is positioned, a metal sheet of constant an imbedded in synthetic resin is incorporated, and said hollow bodies are covered with a wide mesh wire trellis, imbedded in said resin; there is so obtained, for instance in the case of floats or buoys, hollow bodies having resistance qualities in all respects and not to be compared with such as obtained heretofore.

Sixth example: When the compound material obtained by gluing the laminae together is com-

pleted or after the construction of the hollow bodies directly in the desired form, the whole is covered with a more or less thick layer of synthetic resin of the same composition as the resin used in the impregnation and the gluing, and the whole is heated in a known manner in order to effectuate the final polymerisation of said resin, with or without vacuum, pressure or heat; the body so obtained is absolutely tight, rigid and homogeneous.

It is to be noted that the utilization of specially prepared synthetic resins and the employment of laminae or sheets previously impregnated with said substances will make it possible to obtain bodies having insulating qualities, which can be increased or varied as desired by incorporation of chemical or dielectrical substances in said resins, and modifying or suppressing any molecular, radioactive or inductive attraction, vibratory waves, resistance to electric, magnetic or electromagnetic radiations, resonances, aerial electric discharges, etc, while increasing materially the qualities of resistance to shock, shearing, crushing, distorsion, ungluing, disjointing and to the attack of atmospheric agents, acids, salt vapours or the like.

It is to be understood, that every above given indication is only exemplary and may be varied, in a large extent, without departing from the scope of the invention and without modifying its characteristic features; for instance during the preparation of synthetic resins intended to make them suitable for the production of the above indicated veneer woods or plywoods, products with an accessory function and apt to impart any special quality whatever to the finished product may be added.

The new material produced by employment of improved resins makes it possible, due to the composition of its constituents and the chemical and physical phenomena caused or promoted by them, to obtain a new technical product giving the possibility of new technical applications.

LOUIS CHARLES FRÉDÉRIC PÉCHIN.

Published May 11, 1943

Serial No. 260,172

ALIEN PROPERTY CUSTODIAN

RUBBER INSULATION FOR METALLIC CONDUCTORS

Emil Klingler, Korntal, Otto Knapp, Flacht Kreis Leonberg, and Moritz Lutz, Stuttgart-Weilimdorf, Germany; vested in the Alien Property Custodian

Application filed March 6, 1939

It is known to make insulations of hard rubber (vulcanite) for metallic parts which are built into apparatus of various kinds. These vulcanite mixtures made from natural raw rubber have a heat-stability of about 90–110/ C. (according to Martens) and a medium elasticity that suffices to prevent strains and cracks at the vulcanized-in metal insertions. If, however, it is attempted to increase the heat-stability of such insulations, as is in itself urgently necessary, for instance by the addition of suitable filling materials, they become extremely brittle as the specific gravity rises, and mechanically of inferior value and thus useless.

It is further known while using artificial rubber to make vulcanite insulations which, with a heat-stability of 150° C. (according to Martens) and upwards, and at the same time of low specific weight, are still sufficiently firm or solid. Such vulcanite mixtures remain stable and firm even at high working temperatures and do not suffer in their moulding quality by softening or shrinkage. They have, however, the drawback of being almost inelastic, and therefore the vulcanizing-in of metal parts, especially parts of difficult shape, which are generally anchored on all sides, is not advisable in such vulcanite compositions, owing to the risk of cracking associated therewith.

The present invention removes these defects by a finished vulcanized intermediate layer being interposed between the metal parts and the highly heat-stable vulcanite insulation.

This intermediate layer, on the one hand, absorbs for the most part the shrinkage stresses resulting during the succeeding vulcanization or when in use, and thus prevents the formation of cracks, and, on the other hand, forestalls a part of the general shrinkage. This intermediate layer must be more elastic than the highly heat-stable vulcanite layer. As a rule, it will be of high or the highest elasticity so that great strains which would cause cracks can be elastically absorbed. Where the insulation is of relatively large dimensions, normal heat-stable material even of medium elasticity will be advantageously used for the purpose, in order to absorb elastically as far as possible the shrinkages occurring during vulcanization owing to the large dimensions of the insulations, which also necessitate comparatively thick walls for the highly heat-stable vulcanite. Such an intermediate layer of high or maximum or medium elasticity has in its turn already undergone a shrinkage in the vulcanizing-on process and therefore the general shrinkage of the insulation is considerably reduced. The thickness of the walls of the elastic vulcanite layer will thus be made as great as possible. An intermediate layer of medium elasticity has, furthermore, also the advantage that when the highly heat-stable vulcanite is moulded under pressure round it or wrapped round it, it remains sufficiently firm without softening and without being pressed out of place by the metallic part.

In the elastic vulcanite mixture for the intermediate layer, consisting of raw rubber, sulphur, and suitable additions, the sulphur content should preferably be below 32% of the raw rubber content so that the vulcanite may not be brittle. For the same reason, the total additions suitable for the purpose do not amount to more than 5% of the raw rubber content.

The accompanying drawings illustrate the invention in one example of construction. In the drawings:

Figure 1 is a section through the hub of a distributor of a twin-magneto.

Figure 2 is a corresponding plan view.

Figure 3 is a section of the ignition member on the line A—A of Figure 1.

The distributor hub shown in Figure 1 consists in known manner of an aluminium tube *a*, which is preferably provided with a coating or covering of soft iron *b*, for example, by the Schoop metal-spraying process. This coating or covering of soft iron is necessary in this example, because the vulcanized-on vulcanite layer *e* of high mechanical strength having a normal heat-stability of 90–110° C. does not firmly adhere directly to the aluminium surface, while it adheres firmly to the iron. This is perhaps to be ascribed to the greater adhesiveness of the intermediate layer to a sulphide probably occurring on the surface of the metallic iron, which may arise by the action of the sulphur contained in the vulcanized elastic vulcanite on the iron. The adhesion of the elastic layer to iron is also better to copper, for example, although instead of iron other metal can also be used. It is particularly advantageous to apply this intermediate layer of iron by spraying, although other metallizing processes, e. g. thermal vaporizing, electrolytic metal coatings and so forth, or oxidized metals, for instance anodized aluminium, may also be employed for the purpose.

The spraying gives a more or less uneven surface on the coating metal to which the elastic layer *c* adheres particularly well. In some cases, the vulcanite layer is turned after the vulcaniza-

tion. The current-conducting slip-rings *d*, which are electrically connected to the distributor electrodes *d'*, are coated or covered in accordance with the invention, and corresponding to the circumstances of the case on all sides or not on all sides, with a highly elastic rubber layer *e* which sometimes itself may consist of several layers of different elasticity, and the thickness of which layer may amount, for example, to 3 mm. Instead of the highly elastic intermediate layer, one of a normal heat-stable material of medium elasticity may also be employed in some cases within the scope of the invention. The sleeve covered or coated with the vulcanite layer of high mechanical strength is then assembled with the prepared metal part in a suitable mould, and a highly heat-stable vulcanite layer which is built up on artificial rubber, moulded round them under pressure. Finally, the finishing vulcanizing is done.

The multi-layer insulation according to the invention is not limited only to current-carrying parts, but may also be employed in other cases, for example, as a heat insulation.

EMIL KLINGLER.
OTTO KNAPP.
MORITZ LUTZ.

PUBLISHED
MAY 11, 1943.
BY A. P. C.

E. KLINGLER ET AL
RUBBER INSULATION FOR METALLIC CONDUCTORS
Filed March 6, 1939

Serial No.
260,172

Fig. 1

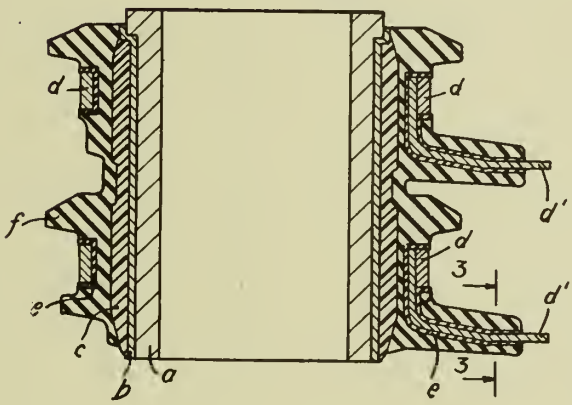

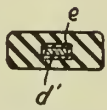

Fig. 3

Fig. 2

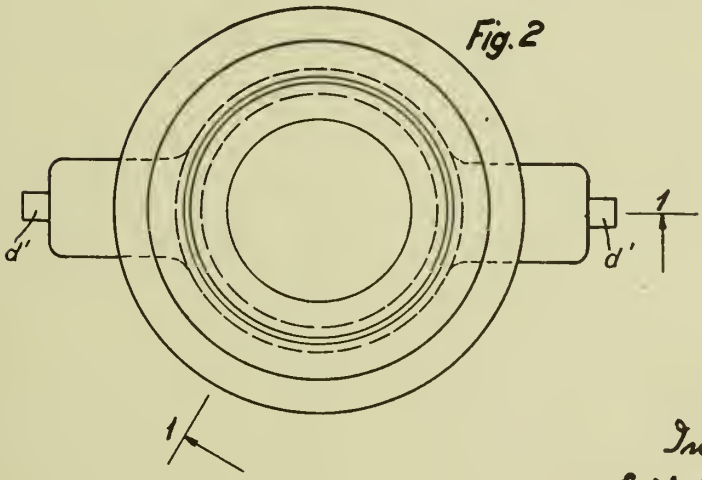

Inventors
Emil Klingler
Otto Knapp
Moritz Lutz
by Roy F. Steinbach
their attorney

Published May 11, 1943

Serial No. 261,049

ALIEN PROPERTY CUSTODIAN

TOBACCO PRODUCTS AND PROCESS OF MAKING SAME

Jules Martin Lande, The Hague, Holland; vested in the Alien Property Custodian

No Drawing. Application filed March 10, 1939

My invention relates to improvements in tobacco products including tobacco proper, the plants from which tobacco is recovered, the products into which raw tobacco is converted and the accessory materials such as sauces, cigarette paper, cigar and cigarette holders, tobacco pipes, filters, cartridges, wrapping materials and tobacco containers.

It is an object of my invention to combine the tobacco either in the plant or during or after manufacture of the raw tobacco or of a commercial tobacco product (including tobacco leaves, cigars, cigarette tobacco, chewing tobacco and snuff) with chemicals, drugs, herbs or preparations containing same or with medicaments or pharmaceutical preparations which exert a curative, biological, immunizing, disinfecting, bactericidal or homeopathic action on the human body, or which otherwise favorably influence organs of the person consuming the tobacco product by smoking, chewing, snuffing or in some other way as also persons not participating in, but present during or after the consumption of such products.

It is a further object of my invention to provide tobacco products and their accessories, which exert prophylactic, curative, pain expelling, sedative, soporific, nourishing, invigorating, regenerating, regulating or cosmetic effects on parts of the human body.

Similarly as the tobacco proper I intend to so improve the sauces or other liquors with which tobacco is treated to improve and finish it; the filters, crystals, cartridges etc. forming part of cigarettes, smoking pipes, cigar and cigarette holders; the cigarette paper or other tobacco envelope; the wrappings and the containers in which tobacco or tobacco products are sold and stored.

My invention includes the manner of so improving these and other products as well as the improved products themselves.

In order to combine tobacco and its accessories with drugs and other means for favorably influencing the human body, I may proceed in different ways.

I may for instance make corresponding additions to the tobacco and tobacco products in the form of a powder or a suspension, solution or emulsion, or in combination with other substances or in the form of vapors which may constitute the active substances themselves or may be carriers of such substances. I may add such suspensions, solutions, emulsions, vapors, powders etc. by impregnation, vaporization, by atomization, spraying, dusting or in some other manner. Alternatively I may expose the tobacco bearing plants to the action of corresponding substances by fertilization of the soil, in which the plants grow.

I may for instance treat raw tobacco or a tobacco product with a solution, vapor or other form of substance, drug or compound having a curative, disinfecting or other favorable influence on the human body by impregnating such product with a solution of such a substance or by adding such substances to the sauce with which the tobacco or tobacco product is treated in the casing or flavouring step. In all cases I thus obtain a tobacco product, the consumption of which by smoking, chewing or snuffing exerts a curative, prophylactic, soothing, calming, lulling, nourishing, invigorating, digestion-regulating, cosmetic or other beneficial effect on the human body.

I may effect such treatment of the tobacco or tobacco product before, during or after conversion of the raw tobacco into an intermediate or a marketable final product.

I may introduce the substance into the tobacco product, for instance a cigarette, before or while the tobacco is filled into the paper or other envelope.

I may impregnate cigarette paper or the pulp, from which the paper is made, with a solution containing the active substance.

I may impregnate with such a substance or solution the wad or other filter inserted in a cigarette or the filter cartridge in a smoking pipe or cigar or cigarette holder.

I may so impregnate the cigar or cigarette holder or the substance of the pipe or of a cigarette case.

I may inject the substance or a suspension or solution thereof into the cigar, cigarette or cut tobacco by means of a syringe.

I may introduce the substance into the human body by making the pipe or cigar or cigarette holder or their mouth-pieces of a wood, bark or other natural or artificial material producing medicinal or disinfecting effects, such as for instance cinchona bark.

I may treat with such an active substance the pulp forming the material from which cigarette paper is made, or I may make cigarette paper from fibers possessing an activity as above described.

I may grow tobacco containing such an active substance by depositing such substance in the soil in which the tobacco plants grow.

I may impregnate with such active substance

the air in which tobacco is stored, fermented or dried, relying to this end also on the hygroscopicity of the tobacco.

During consumption of the tobacco thus treated or of tobacco stored in envelopes or containers or consumed in pipes etc. containing such substance, this latter will enter the organism of the consumer or of another person present in the same room through the respiratory or the digestive organs, the saliva etc. and will then exert its beneficient effect on the organism.

By way of example iodine may be so administered to the body by means of tobacco products containing iodine or an iodine compound developing iodine during consumption. To this effect the tobacco may for instance be treated with an alcoholic iodine solution containing for instance 0.1 per cent iodine, calculated on the weight of the tobacco treated. I found that the greater part of the iodine was volatilized and carried along by the gases of combustion developed from the tobacco, an analysis of these gases and vapors resulting in 0.02 per cent iodine, calculated on the tobacco, about one third of which appeared in the products of metabolism of the smoker. It is known that the mucous membranes and the saliva and respiratory organs will absorb curative agents.

Similar tests were made and similar results obtained with a great number of other medicaments or the like, including bromobenzoic acid, bromacetic acid, bromostyrene, iodobromide, valeric acid and calciumbromide (sedatives); sulfonal, chloral, amylenhydrate and urethane (soporifics), cresol, terpene, gnajacol (disinfectants and cough remedies); formalin, benzoic acid and cinnamic acid (disinfectants and antiseptics); eugenol, camphoric acid anhydrid, cubebe extract (urine disinfectants); sandal wood (urine antiseptic); sassafras (remedy against bronchial affections); cholesterine (general tonics); garlic extract, clove oil, aniseed oil, onion oil, allyl mustard oil (stomachics); santonine (anthelmintic); crotonic acid and hydrogen sulfide (laxatives); urea chloride (diuretic); antipyrine (antirheumatic); sparteine (heart remedy); turmeric (remedy against liver complaints).

All the substances mentioned above evaporate at the temperature of burning tobacco; the majority of them is soluble in water, others in alcohol and only very few of them undergo partial decomposition.

Various changes may be made in the details disclosed in the foregoing specification without departing from the invention or sacrificing the advantages thereof.

The term "tobacco product" as used in the claims is intended to include, besides tobacco, all products consisting of or containing tobacco.

JULES MARTIN LANDE.

Published May 11, 1943

Serial No. 263,240

ALIEN PROPERTY CUSTODIAN

PREPARATION OF IMMUNE BLOOD, SEPARATED PLASMA AND SERUM OF SAID BLOOD

Yu Maekawa, Nakano-ku, Tokyo, Japan; vested in the Alien Property Custodian

No Drawing. Application filed March 21, 1939

This invention relates to improvements in immunization of human body against infectious diseases, and is specially directed to the preparation of immune blood, separated plasma and serum of said blood.

The primary object of the present invention is to provide the blood for transfusion, separated plasma and serum for use of treatment and prevention against infectious diseases of human beings, especially against tuberculosis.

Another object of the invention is to produce tuberculosis antigens for use of treatment, prevention and immunization training of tuberculosis.

Numerous other objects and advantages will become apparent in the course of the ensuing description.

The following is the principle of my method described in regard to tuberculosis as prototype.

According to the ordinary accepted ideas on tubercle immunity, tuberculosis does not establish remarkable active immunity, since it is known that tuberculosis recurs, much less in regard to the passive immunization, there can exist, though the group of accessory immunity reactions (agglutination and complement binding reaction, etc.) very weakly exists, but the principal immunity, reactions against tubercle bacilli and their products.

But it is an error due to the circumstances that the high-grade individual differences of human beings were neglected and so the observations were summarized only on diseased or half-diseased persons, except the experimentation on animals.

And now diseased and half-diseased persons are constitutionally susceptible to the infection, namely have individuality not to produce immunity, and the more deviated from the standard, the more susceptible and the more inclined to aggravation. And I have discovered that it is possible to reverse this conclusion and proved this experimentally as follows.

I selected persons having individuality of potent immunity producing faculty and carried out successive gradational immunization training by inoculating on them tubercle bacilli and their products. By this method I succeeded in producing a high-valued active immunity. And then in the use of human blood, plasma and serum thus obtained, there is no limitation in application as in the case of animal-sera, because there is no fear of provoking serum sickness by injection of alien proteins of therapeutic animal-sera. So I could not only use very great doses of high-valued antigen, but also produce such high-valued immune bodies as this invention which never have been obtained heretofore in animals except in human bodies.

The above-mnetioned theory and discovery relating to tuberculosis can be extended to various other infectious diseases, besides tuberculosis, as will be experimentally demonstrated. And the invention rests on this theory and discovery.

And I describe in detail first the application of this method to tuberculosis.

Preparation of Tubercle Antigen

A. Powerful soluble tubercle bacilli antigen

The process of preparation is as follows. Being fished with a spiral large platinum loop a live colony of a tubercle bacilli strain of fixed virulence (glycerine bouillon culture of a strain of powerful fixed virulence of Doctor Shuzo Sato, the Institute for Infectious Diseases, Imperial University of Tokyo), being removed then the rest of the culture medium on a sterilized blotting-paper, being added on it 0.1% chlor-calvacroled ether-alcohol or 0.1% chlor-calvacroled acetone water of the same weight as the bacilli, being dispersed then the bacilli by stirring, being stored up in a air-tight glass container, frequently shaken, kept therein over seven days, being afterwards centrifuged, a supernatant yellowish fluid is obtained, which is referred to as the Solution I and retained air-tightly. After being dryed the said bacilli mass, being weighed and ground in a porcelain mortar to fine powder, being then tested to see under a microscope if the bacilli lose its rod-forms, take indefinite gallerte-forms and lose acid-fastness, being thereupon again weighed and measured to see the decrease by scattering during the grinding, being then again added 0.1% chlor-calvacroled physiological solution, being kept in air-tight container at 37° C., frequently shaken over twenty hours and being afterwards centrifuged, a supernatant fluid is obtained, which is referred to as Solution II and retained air-tightly. Precipitated bacilli mass being again ground, being added on it 0.1% chlor-calvacroled 40% acetone water and infused, being again centrifuged, and a supernatant fluid is obtained which referred to as Solution III, the precipitate is discarded.

The retained three supernatant fluids being mixed, filtered through sterilized filter-paper, yellowish a little turbid fluid is obtained. This fluid is referred to as the Powerful Soluble Tu-

bercle Bacilli Antigen (abbreviated in the following as antigen A). 1 cc. of this fluid contains 0.035 gr. of the above-mentioned tubercle bacilli in raw state. This original solution 1 cc. is calculated as 10,000 units of this antigen by use.

As this antigen contains no formed material, when subcutaneously inoculated after having been adequately diluted (for example 10,000 times diluted with physiological solution), it is easily resorbed and is able to mobilize the faculty of producing antibodies of the tissue cell of the whole body and particularly of blood forming organs, the chief immunity producing organs. And moreover as it stays little at the inoculated place, accessory actions, putrefaction, etc. can be avoided.

Antigen A is, as in the following described, chiefly used for the purpose of high-valued tubercle immunization, but also applicable as such for therapy and prophylaxis of tuberculosis.

And the therapeutic application of antigen A as such on acute, sub-acute and chronic phthisic forms is contra-indicated, as the antigen unpreparedly applied, is liable to aggravate the disease on account of its potent virulence. In such circumstances, before the application of antigen A, the disease focus is cured or disease process is suppressed completely or relatively by use of tubercle immune blood and serum (products afterwards described in this specification) which is obtained by inoculation of tubercle bacilli and their products (chiefly antigen A) into persons of individuality to be highly immunized; thereupon active immunizing faculty is quickened to increase by inoculation of antigen A on the good opportunity.

But on the contrary the chronic non-phthisic type is in many cases cured by amelioration of the general state and suppression of symptoms through repeated inoculations of this antigen.

In use I provide a 10,000 times diluted solution of this antigen. For adult persons inoculation dose begins with 2 cc., and after disappearance of the reactions doses are successively increased. For the purpose of therapy it is repeatedly applied until cure is achieved. For the purpose of prophylaxis of tuberculosis the inoculation of final dose 0.05–1.0 cc. of the original solution per 50 kg. body-weight suffices.

For children dose is decreased in proportion to body-weight.

B. Modified soluble tubercle toxin antigen

The process of preparation is as follows. A colony of the tubercle bacilli culture is heat-sterilized and then dried and in a porcelain mortar, or in the wet state in a refrigerated mortar ground to fine powder, in both cases until the bacilli lose acid-fastness in staining; then being added on it 0.2% formoled physiological solution, it is kept in a thermostat at the temperature of 37° C, frequently shaken about a week. By this procedure the virulence is modified and stimulating power is decreased. Then it is subjected to filtration and a yellowish transparent fluid is obtained, which is referred to as Modified Soluble Tubercle Toxin Antigen. 1 cc. of this fluid contains 0.005 gr. of dried tubercle bacilli. Antigen B is chiefly used, as in the following description, for the purpose of selecting human beings fit for the immunization training. But also it can be used as such to the purpose of treatment and prevention of tuberculosis.

In use for subcutaneous application antigen B is diluted 2,000 times with the physiological saline solution. For adult persons beginning with a dose of 0.02 cc. doses are increased successively. Tubercle bacilli grow very slowly, different from viri of another acute infectious diseases. And by the inoculation of sufficiently resorbable tubercle toxin on bacillus-keeper of tuberculosis, being avoided local retentive reaction, that is making of pseudo-tubercle focus, when the dose is adopted so as to avoid the stimulation, antitoxin is produced in short times without or almost without stimulating the focus. And antigen B is very easily resorbed, so that the inoculated place shows very rarely retentive reaction. So it has advantage of increasing the faculty to produce active immunity of blood forming organs and tissue cells of the whole body. The use of the antigen B, very attenuated toxin, do no harms on human beings. Therefore antigen B is used for the purpose of producing tuberculosis basal immunization (low active immunization) on children and on persons who cannot tolerate antigen A. Antigen B is inoculated subcutaneously for the purpose of decolorization of skin as it has a powerful remarkable and durable lytic action on pigment in skin cells. And it can be also used as a cosmetic or skin remedy to let go into the skin by applying on skin being mixed with various bases (for example cream, oil, alcohol, aquatic solution and the like).

Selection of Human Beings fit for Immunization Training

(Basal immunization training)

To select human being fit for immunization training, a very diluted solution of antigen A is satisfactory, but to avoid the dangers possible by sensible constitution antigen B, more non-stimulating and more resorbable, is at first fitted.

Thus for the purpose of selecting human bodies provided with individuality of immunity producing faculty, healthy bodies who have no anamnesis of tubercle, are subjected to repeated subcutaneous inoculations of antigen B or A in accordance with immunity producing faculty of each person. And in the course of these inoculations the intensity of possible immunity producing faculty is observed. And only to the bodies of potent immunity producing faculty successive inoculations are repeatedly continued, and they are made blood-givers.

Potent Tubercle Immunization Training of Blood-Givers

Above mentioned selected persons are inoculated with antigen A or B of successively increasing doses. And the each next dose are determined in consideration of the immunity producing faculty which is known from local swelling, redness, disorder, weakness and fever, etc. Persons with allergic phenomena by a little increase of dose have little possibility for continued potent training.

On persons with no reactions, namely anergic state, doses can be increased rapidly in one or two days. (In such cases also according to the individual differences of immunity producing faculty of concerned persons it turns finally allergic at a certain stage. Then we can make it either anergic or allergic by mere consideration of the subsequently inoculated dose.)

Thus continuing the inoculation we can make produce in the body tubercle immune body fluid of relative potency which is calculated by immunization ratio, the ratio of inoculated dose divided by body-weight. I use the quotient of the

final dose divided by body-weight (kg.) as unit of immunization.

The verification of the immunity value is made in vitro and the value is known by the principal immunization reaction (effect of the sensibilization) and the accessory immunization reactions (complement fixation test, agglutination, and the like) elevated parallel with high valued training.

One of the tubercle immunization trained blood-givers is a man of body-weight 56.0 kg. who can tolerate the antigen dose 1.250,000 units and its immunization ratio amounts to 22,000 units, which corresponds to 4.375 gr. of live tubercle bacilli.

According to the heretofore accepted tubercle immunity theories, it is considered impossible repeated inoculation doses in series as ar^n, increasing geometrically, but only possible in series 1, 2, 3, 4, 5, . . . or 2, 4, 6, 8, . . . increasing arithmetically, and it is out of the question to inoculate so much virulent tubercle bacilli as this invention demonstrates. As to the N. T. Koch 0.5 mg. or 1.0 mg. was considered as the maximal dose by the most investigators.

Now the tubercle immunity once established by this invention retains its value long lasting.

Then the immunized blood produced in the above-mentioned procedure is drawn for example everyday 100 cc. and is as such transfused into tuberclous diseased or its separated plasma or serum is injected. And in case that the separated blood-corpuscles of the drawn blood is returned to the blood-giver, the repeated drawing of over 100 cc. every day makes no remarkable depression of immunity, which is known practically by lack of the reactions by antigen-inoculation. Observations made on numerous blood-givers show for years no signs of disorder.

I resume the virtue of the tuberculosis immune blood of this invention, which has been so far practically proved, as follows. Incipient pulmonary phthisis in the stage of apical catarrh and hilus adenitis can be in 3 or 4 days by injecting about 3–4000 immunity units, and in the second stage non-open phthisis in 6 or 7 days by injecting about 6–7000 immunity units usually suppressed; especially being applied to acute but non-destructive forms in swelling hyperaemic stage the grave symptoms disappear very rapidly and cure is achieved, so in cerebral meningitis, so in peritonitis, periostitis, nephrotuberculosis, laryngeal tuberculosis, intestinal tuberculosis, and the like; and in the case of phthisis in the third stage, owing to the tissue destruction the percentage of cure sinks under 70%, but patients of incipient and second stage can be almost all cured in short days, being allowed mild activity of life.

Some examples will make apparent the nature of the invention more clearly.

Example 1.—On a person of 52.0 kg. body-weight antigen B is inoculated in 67 days in the successive gradational doses of 1, 2, 10, 50, 250, 1,000, 5,000, 30,000 units, every time almost without reactions. And by the inoculation of 150,000 units allergic state with swelling, redness high fever and the like appeared. By this time 67 days were required and the calculated immunity value amounts to 2,834 units.

After 2 days begins the blood-giving. And in about one month under the condition of returning blood-corpuscles of 445 cc. blood-drawing 13 times, the sum total 1,160 cc., was made. After that antigen B 400,000 units, was inoculated. This time very intense reactions: hypertemperature, swelling, redness continued several days, but gradually disappeared. By this time the calculated immunity value amounts to 7,692 units.

After 10 days blood-giving begins again and under the condition of returning the blood-corpuscles of 1,645 cc. in about 80 days blood-giving amounts to 3,785 cc. Thereupon follows inoculation of antigen A 600,000 units. Since this time the increasing ratio was 1.5, reaction was more insignificant compared with the former time. By this time the calculated immunity value amounts to 11,538.

After 5 days commenced again blood-giving and in about 2 months under the condition of returning blood-corpuscles of 1,955 cc. the sum total amounts to 6,060 cc. And thereupon after about 40 days being inoculated antigen A 1,020,000 units, reaction was the same as the former time. Thus the final calculated value amounts to 19,615 units.

After that in about one year every month 1,000–2,500 cc. blood was drawn without any signs of breaking down.

Example 2.—Being on a person of 72.0 kg. body-weight antigen A. 0.2 units is inoculated, swelling and redness remained over several days and on account of fever business was suspended one day. Next after 7 months by the inoculation of 0.4 units reactions were the same as the former time. After 10 days the dose of the third inoculation was 0.4 units with insignificant reactions, feverless. But after 6 months 0.6 units were inoculated with serious reactions, at last the training was given up.

Some examples of clinical experiences are as follows.

Example 3.—A boy of 16 years, body-weight 33.8 kg., both sides pleurisy, pulmonary infiltration of the second stage, light nephrotuberculosis, light fever, light cough, both sides chest half dull, diminished vesicular breathing, on the light kidney spontaneous and oppressive pain. By transfusion of 800 units of the tuberculosis immune blood, renal pains disappeared promptly in 5 hours. Thereupon the serum or blood were injected 7 times in a week, body weight gained to 37.9 kg., and symptoms disappeared. (Here I use the product of drawn blood (gr.) multiplied by immunization ratio of said blood as the unit of blood for transfusion.) Inoculation of antigen B was made and continued. In 10 days body-weight gained to 43.5 kg. and in 2 months by 11 times' inoculation 3,000 units became tolerable.

Example 4.—Girl of thirteen years old, tuberlosis peritonitis, right apical infiltration, laryngeal tuberculosis suspended, 38–39° C. fever continued, diarrhoea, appetite very poor, distension of belly, umbilical circumference 78 cm., laparotomy was indicated by the physician in charge as the only remaining way, but as the operation can provoke the chest symptoms, bad prognosis was pronounced. This patient was treated every day with the blood or serum of this invention. By the first transfusion all symptoms became milder, and after 5 treatments the umbilical circumference decreased to 66 cm., fever sank to ca. 37° C., after 8 treatments umbilical circumference and temperature became normal. And thereupon followed 4 treatments every other day, body-weight gained to 37.2 kg. All symptoms were suppressed. So the antigen B was inoculated. After the sixth inoculation with 100 units abdominal pains and diarrhoea appeared again, but after the applica-

tion of tubercle immune serum 1,330 units, the next day pains and diarrhoea ceased.

Although I have illustrated so far this invention in connection with tuberculosis, but it may also be applied to the other various infectious diseases, than tuberculosis, of which the existence of immunity is known. Namely by means of inoculating the viri of various infectious diseases and their products as antigen in gradational increasing doses into human bodies selected for high valued immunization training in the course of basal inoculation training, there can be produced in the body fluid passive immune bodies and thus prepared blood, plasma and serum for transfusion for therapeutic and prophylactic use against each corresponding disease.

One of the experiments on other infectious diseases of human beings than tuberculosis is as follows.

Example 5.—A person who had once typhoid fever and is always insensible to vaccine. To this person antigen B was inoculated in 24 months 10 times, beginning with 0.5 units. But finally only 70 units were inoculated with light fever and putrefaction. Thus the faculty of producing tubercle immunity manifested itself relatively low. And the immunization training was given up. Thereupon typhoid bacilli immunization training with typhoid antigen (officially indicated initial dose 0.5 cc., 2nd dose 1.0 cc. for adult) was carried out, beginning with 1.0 cc., in 9 months 10 times, the final dose was 80.0 cc. at one time.

Although I have described my invention setting forth specifically the use thereof in immunization against tuberculosis, it will be apparent from the general nature of the above description that it is intended not to be limited to tuberculosis. From work already done it is apparent that the principles here involved are adaptable to the treatment of many other infectious diseases, of which the existence of immunity is known, with equal advantages and from such work, it is believed that this invention is applicable to practically the entire field of immunization where gradational successive increasing doses of antigen can be used.

YU MAEKAWA.

Published May 11, 1943

Serial No. 263,577

ALIEN PROPERTY CUSTODIAN

ARTIFICIAL PRODUCT IMITATING SKINS AND LEATHER AND PROCESS FOR MAKING SAME

Gaston Hubert Vulliet-Durand, Paris, France; vested in the Alien Property Custodian

No Drawing. Application filed March 22, 1939

The products which are found in the market under the denomination of mock-leather, synthetic leather, etc., although quite numerous, are all connected to two principal methods of manufacture, which are as follows:

1. The method analogous to what is used for oil-cloth, which consists in applying, upon a fabric backing, one or more layers of a flexible substance such as rubber or the like, in colouring this substance, and in graining its surface.

2. The method which consists in mixing and agglomerating animal or vegetable fibres by means of strong binding substances containing rubber or the like, in colouring this product which is manufactured in sheets, and in graining its surface.

Among these imitation products, the ones which have the greatest resemblance to leather are those consisting of agglomerates fibres of any kind, but in the two methods above mentioned, such products are plastic substances rather than leather, since in both cases the flexibility of the product is obtained by means of coating or binding substances which are flexible and rubber like. The flexibility of these plastic products is due to their chemical constituents.

As compared with genuine leather, they have several fundamental defects which are as follows:

1. Their great instability in the course of time, as to their flexibility. The action of the substances which make them supple or plastic will finally cease, the rubber becomes sticky or brittle, etc.

2. The imitation products with fabric backing are adapted for extension in the direction of the bias, but not in the direction of the thread.

3. The imitation products formed by agglomeration cannot be readily made in thicknesses of 3/10 mm. or below, they are by no means substantial at the seams, they are not sufficiently flexible for book-binding, for case and sheath-making, etc.

The process according to the invention eliminates all such drawbacks, and permits of obtaining products having all the qualities and adapted for all the uses of skins and leather. The products obtained are resistant and quite flexible owing to a construction of the substance which permits the constituent fibres to move upon one another as is the case in genuine leather. According to the invention, this result is obtained by the use of inorganic salts of organic fatty acids which are mixed with or precipitated upon fibres in the presence or not of a colloid.

Use is chiefly made of the inorganic salts of the organic fatty acids such as capric, caproic, caprylic, erucic, lauric, linoleic, linolenic, myristic, oenauthic, oleic, palmitic, pelargonic, ricinic, ricinoleic, stearic, tridecylique, undecylenic, undecylic etc. and other similar products.

Such products are employed alone or mixed with one another or with other substances.

By way of indication, which is not limitative, very satisfactory results are obtained with salts of aluminium, magnesium, zinc, bismuth, etc., of the said acids.

In order to obtain such skins or leathers, the following methods of operation can be used.

Example 1

Method in which the fibre is mixed with an inorganic salt of an organic fatty acid.

(*a*) The proceeding is quite the same as if it were desired to load paper pulp with an inorganic product in the beating engine; the pulp, consisting of manila or cotton which is properly worked up while keeping the fibres as long as possible, is mixed with a quantity having preferably the same weight of stearate of zinc or the like.

(*b*) To facilitate the mixing the stearate of zinc is preliminarily placed in suspension in a vessel provided with stirrers, containing water and the colloid such as mucilage, gum, or the like.

(*c*) When the whole forms a homogeneous mixture in the beating engine, it is treated in the same way as for making ordinary paper or cardboard.

(*d*) The resulting sheets are then coated or spread on one side with a solution of a suitable sizing paste.

Example 2

Method in which an inorganic salt of an organic fatty acid obtained by double decomposition is precipitated upon the fibre.

(*a*) In the beating engine containing the refined pulp and water at the proper temperature, there is dissolved the desired quantity of a soluble salt, such as zinc sulphate, acetate, chloride, or the like, and the whole is allowed to stand until the fibres become impregnated.

(*b*) In a tank which is optionally heated, there has been place, on the other hand, an aqueous solution of an alkaline stearate, or other alkaline salt of a fatty acid.

(*c*) The solution *b*, when placed in the beating engine, will precipitate on the fibre the insoluble inorganic salt of the organic fatty acid.

(*d*) The precipitate and the pulp can be washed in the engine by means of the usual washing drum.

(*e*) A colloid may be added, as in the preceding example and the process is finished in the same way.

The sheets obtained by either of these processes can be treated, like the skins and leather impregnated with various products, by dyeing, colouring, varnishing, graining, etc.

The aforesaid indications are given solely by way of example, and all details of execution and application of the process can be varied at will without departing from the principle of the invention.

GASTON HUBERT VULLIET-DURAND.

Published May 11, 1943

Serial No. 263,240

ALIEN PROPERTY CUSTODIAN

PREPARATION OF IMMUNE BLOOD, SEPARATED PLASMA AND SERUM OF SAID BLOOD

Yu Maekawa, Nakano-ku, Tokyo, Japan; vested in the Alien Property Custodian

No Drawing. Application filed March 21, 1939

This invention relates to improvements in immunization of human body against infectious diseases, and is specially directed to the preparation of immune blood, separated plasma and serum of said blood.

The primary object of the present invention is to provide the blood for transfusion, separated plasma and serum for use of treatment and prevention against infectious diseases of human beings, especially against tuberculosis.

Another object of the invention is to produce tuberculosis antigens for use of treatment, prevention and immunization training of tuberculosis.

Numerous other objects and advantages will become apparent in the course of the ensuing description.

The following is the principle of my method described in regard to tuberculosis as prototype.

According to the ordinary accepted ideas on tubercle immunity, tuberculosis does not establish remarkable active immunity, since it is known that tuberculosis recurs, much less in regard to the passive immunization, there can exist, though the group of accessory immunity reactions (agglutination and complement binding reaction, etc.) very weakly exists, but the principal immunity, reactions against tubercle bacilli and their products.

But it is an error due to the circumstances that the high-grade individual differences of human beings were neglected and so the observations were summarized only on diseased or half-diseased persons, except the experimentation on animals.

And now diseased and half-diseased persons are constitutionally susceptible to the infection, namely have individuality not to produce immunity, and the more deviated from the standard, the more susceptible and the more inclined to aggravation. And I have discovered that it is possible to reverse this conclusion and proved this experimentally as follows.

I selected persons having individuality of potent immunity producing faculty and carried out successive gradational immunization training by inoculating on them tubercle bacilli and their products. By this method I succeeded in producing a high-valued active immunity. And then in the use of human blood, plasma and serum thus obtained, there is no limitation in application as in the case of animal-sera, because there is no fear of provoking serum sickness by injection of alien proteins of therapeutic animal-sera. So I could not only use very great doses of high-valued antigen, but also produce such high-valued immune bodies as this invention which never have been obtained heretofore in animals except in human bodies.

The above-mnetioned theory and discovery relating to tuberculosis can be extended to various other infectious diseases, besides tuberculosis, as will be experimentally demonstrated. And the invention rests on this theory and discovery.

And I describe in detail first the application of this method to tuberculosis.

Preparation of Tubercle Antigen

A. Powerful soluble tubercle bacilli antigen

The process of preparation is as follows. Being fished with a spiral large platinum loop a live colony of a tubercle bacilli strain of fixed virulence (glycerine bouillon culture of a strain of powerful fixed virulence of Doctor Shuzo Sato, the Institute for Infectious Diseases, Imperial University of Tokyo), being removed then the rest of the culture medium on a sterilized blotting-paper, being added on it 0.1% chlor-calvacroled ether-alcohol or 0.1% chlor-calvacroled acetone water of the same weight as the bacilli, being dispersed then the bacilli by stirring, being stored up in a air-tight glass container, frequently shaken, kept therein over seven days, being afterwards centrifuged, a supernatant yellowish fluid is obtained, which is referred to as the Solution I and retained air-tightly. After being dryed the said bacilli mass, being weighed and ground in a porcelain mortar to fine powder, being then tested to see under a microscope if the bacilli lose its rod-forms, take indefinite gallerte-forms and lose acid-fastness, being thereupon again weighed and measured to see the decrease by scattering during the grinding, being then again added 0.1% chlor-calvacroled physiological solution, being kept in air-tight container at 37° C., frequently shaken over twenty hours and being afterwards centrifuged, a supernatant fluid is obtained, which is referred to as Solution II and retained air-tightly. Precipitated bacilli mass being again ground, being added on it 0.1% chlor-calvacroled 40% acetone water and infused, being again centrifuged, and a supernatant fluid is obtained which referred to as Solution III, the precipitate is discarded.

The retained three supernatant fluids being mixed, filtered through sterilized filter-paper, yellowish a little turbid fluid is obtained. This fluid is referred to as the Powerful Soluble Tu-

bercle Bacilli Antigen (abbreviated in the following as antigen A). 1 cc. of this fluid contains 0.035 gr. of the above-mentioned tubercle bacilli in raw state. This original solution 1 cc. is calculated as 10,000 units of this antigen by use.

As this antigen contains no formed material, when subcutaneously inoculated after having been adequately diluted (for example 10,000 times diluted with physiological solution), it is easily resorbed and is able to mobilize the faculty of producing antibodies of the tissue cell of the whole body and particularly of blood forming organs, the chief immunity producing organs. And moreover as it stays little at the inoculated place, accessory actions, putrefaction, etc. can be avoided.

Antigen A is, as in the following described, chiefly used for the purpose of high-valued tubercle immunization, but also applicable as such for therapy and prophylaxis of tuberculosis.

And the therapeutic application of antigen A as such on acute, sub-acute and chronic phthisic forms is contra-indicated, as the antigen unpreparedly applied, is liable to aggravate the disease on account of its potent virulence. In such circumstances, before the application of antigen A, the disease focus is cured or disease process is suppressed completely or relatively by use of tubercle immune blood and serum (products afterwards described in this specification) which is obtained by inoculation of tubercle bacilli and their products (chiefly antigen A) into persons of individuality to be highly immunized; thereupon active immunizing faculty is quickened to increase by inoculation of antigen A on the good opportunity.

But on the contrary the chronic non-phthisic type is in many cases cured by amelioration of the general state and suppression of symptoms through repeated inoculations of this antigen.

In use I provide a 10,000 times diluted solution of this antigen. For adult persons inoculation dose begins with 2 cc., and after disappearance of the reactions doses are successively increased. For the purpose of therapy it is repeatedly applied until cure is achieved. For the purpose of prophylaxis of tuberculosis the inoculation of final dose 0.05–1.0 cc. of the original solution per 50 kg. body-weight suffices.

For children dose is decreased in proportion to body-weight.

B. Modified soluble tubercle toxin antigen

The process of preparation is as follows. A colony of the tubercle bacilli culture is heat-sterilized and then dried and in a porcelain mortar, or in the wet state in a refrigerated mortar ground to fine powder, in both cases until the bacilli lose acid-fastness in staining; then being added on it 0.2% formoled physiological solution, it is kept in a thermostat at the temperature of 37° C, frequently shaken about a week. By this procedure the virulence is modified and stimulating power is decreased. Then it is subjected to filtration and a yellowish transparent fluid is obtained, which is referred to as Modified Soluble Tubercle Toxin Antigen. 1 cc. of this fluid contains 0.005 gr. of dried tubercle bacilli. Antigen B is chiefly used, as in the following description, for the purpose of selecting human beings fit for the immunization training. But also it can be used as such to the purpose of treatment and prevention of tuberculosis.

In use for subcutaneous application antigen B is diluted 2,000 times with the physiological saline solution. For adult persons beginning with a dose of 0.02 cc. doses are increased successively. Tubercle bacilli grow very slowly, different from viri of another acute infectious diseases. And by the inoculation of sufficiently resorbable tubercle toxin on bacillus-keeper of tuberculosis, being avoided local retentive reaction, that is making of pseudo-tubercle focus, when the dose is adopted so as to avoid the stimulation, antitoxin is produced in short times without or almost without stimulating the focus. And antigen B is very easily resorbed, so that the inoculated place shows very rarely retentive reaction. So it has advantage of increasing the faculty to produce active immunity of blood forming organs and tissue cells of the whole body. The use of the antigen B, very attenuated toxin, do no harms on human beings. Therefore antigen B is used for the purpose of producing tuberculosis basal immunization (low active immunization) on children and on persons who cannot tolerate antigen A. Antigen B is inoculated subcutaneously for the purpose of decolorization of skin as it has a powerful remarkable and durable lytic action on pigment in skin cells. And it can be also used as a cosmetic or skin remedy to let go into the skin by applying on skin being mixed with various bases (for example cream, oil, alcohol, aquatic solution and the like).

Selection of Human Beings fit for Immunization Training

(Basal immunization training)

To select human being fit for immunization training, a very diluted solution of antigen A is satisfactory, but to avoid the dangers possible by sensible constitution antigen B, more non-stimulating and more resorbable, is at first fitted.

Thus for the purpose of selecting human bodies provided with individuality of immunity producing faculty, healthy bodies who have no anamnesis of tubercle, are subjected to repeated subcutaneous inoculations of antigen B or A in accordance with immunity producing faculty of each person. And in the course of these inoculations the intensity of possible immunity producing faculty is observed. And only to the bodies of potent immunity producing faculty successive inoculations are repeatedly continued, and they are made blood-givers.

Potent Tubercle Immunization Training of Blood-Givers

Above mentioned selected persons are inoculated with antigen A or B of successively increasing doses. And the each next dose are determined in consideration of the immunity producing faculty which is known from local swelling, redness, disorder, weakness and fever, etc. Persons with allergic phenomena by a little increase of dose have little possibility for continued potent training.

On persons with no reactions, namely anergic state, doses can be increased rapidly in one or two days. (In such cases also according to the individual differences of immunity producing faculty of concerned persons it turns finally allergic at a certain stage. Then we can make it either anergic or allergic by mere consideration of the subsequently inoculated dose.)

Thus continuing the inoculation we can make produce in the body tubercle immune body fluid of relative potency which is calculated by immunization ratio, the ratio of inoculated dose divided by body-weight. I use the quotient of the

final dose divided by body-weight (kg.) as unit of immunization.

The verification of the immunity value is made in vitro and the value is known by the principal immunization reaction (effect of the sensibilization) and the accessory immunization reactions (complement fixation test, agglutination, and the like) elevated parallel with high valued training.

One of the tubercle immunization trained blood-givers is a man of body-weight 56.0 kg. who can tolerate the antigen dose 1,250,000 units and its immunization ratio amounts to 22,000 units, which corresponds to 4.375 gr. of live tubercle bacilli.

According to the heretofore accepted tubercle immunity theories, it is considered impossible repeated inoculation doses in series as ar^n, increasing geometrically, but only possible in series 1, 2, 3, 4, 5, . . . or 2, 4, 6, 8, . . . increasing arithmetically, and it is out of the question to inoculate so much virulent tubercle bacilli as this invention demonstrates. As to the N. T. Koch 0.5 mg. or 1.0 mg. was considered as the maximal dose by the most investigators.

Now the tubercle immunity once established by this invention retains its value long lasting.

Then the immunized blood produced in the above-mentioned procedure is drawn for example everyday 100 cc. and is as such transfused into tuberclous diseased or its separated plasma or serum is injected. And in case that the separated blood-corpuscles of the drawn blood is returned to the blood-giver, the repeated drawing of over 100 cc. every day makes no remarkable depression of immunity, which is known practically by lack of the reactions by antigen-inoculation. Observations made on numerous blood-givers show for years no signs of disorder.

I resume the virtue of the tuberculosis immune blood of this invention, which has been so far practically proved, as follows. Incipient pulmonary phthisis in the stage of apical catarrh and hilus adenitis can be in 3 or 4 days by injecting about 3–4000 immunity units, and in the second stage non-open phthisis in 6 or 7 days by injecting about 6–7000 immunity units usually suppressed; especially being applied to acute but non-destructive forms in swelling hyperaemic stage the grave symptoms disappear very rapidly and cure is achieved, so in cerebral meningitis, so in peritonitis, periostitis, nephrotuberculosis, laryngeal tuberculosis, intestinal tuberculosis, and the like; and in the case of phthisis in the third stage, owing to the tissue destruction the percentage of cure sinks under 70%, but patients of incipient and second stage can be almost all cured in short days, being allowed mild activity of life.

Some examples will make apparent the nature of the invention more clearly.

Example 1.—On a person of 52.0 kg. body-weight antigen B is inoculated in 67 days in the successive gradational doses of 1, 2, 10, 50, 250, 1,000, 5,000, 30,000 units, every time almost without reactions. And by the inoculation of 150,000 units allergic state with swelling, redness high fever and the like appeared. By this time 67 days were required and the calculated immunity value amounts to 2,884 units.

After 2 days begins the blood-giving. And in about one month under the condition of returning blood-corpuscles of 445 cc. blood-drawing 13 times, the sum total 1,160 cc., was made. After that antigen B 400,000 units, was inoculated. This time very intense reactions: hypertemperature, swelling, redness continued several days, but gradually disappeared. By this time the calculated immunity value amounts to 7,692 units.

After 10 days blood-giving begins again and under the condition of returning the blood-corpuscles of 1,645 cc. in about 80 days blood-giving amounts to 3,785 cc. Thereupon follows inoculation of antigen A 600,000 units. Since this time the increasing ratio was 1.5, reaction was more insignificant compared with the former time. By this time the calculated immunity value amounts to 11,538.

After 5 days commenced again blood-giving and in about 2 months under the condition of returning blood-corpuscles of 1,955 cc. the sum total amounts to 6,060 cc. And thereupon after about 40 days being inoculated antigen A 1,020,000 units, reaction was the same as the former time. Thus the final calculated value amounts to 19,615 units.

After that in about one year every month 1,000–2,500 cc. blood was drawn without any signs of breaking down.

Example 2.—Being on a person of 72.0 kg. body-weight antigen A. 0.2 units is inoculated, swelling and redness remained over several days and on account of fever business was suspended one day. Next after 7 months by the inoculation of 0.4 units reactions were the same as the former time. After 10 days the dose of the third inoculation was 0.4 units with insignificant reactions, feverless. But after 6 months 0.6 units were inoculated with serious reactions, at last the training was given up.

Some examples of clinical experiences are as follows.

Example 3.—A boy of 16 years, body-weight 33.8 kg., both sides pleurisy, pulmonary infiltration of the second stage, light nephrotuberculosis, light fever, light cough, both sides chest half dull, diminished vesicular breathing, on the light kidney spontaneous and oppressive pain. By transfusion of 800 units of the tuberculosis immune blood, renal pains disappeared promptly in 5 hours. Thereupon the serum or blood were injected 7 times in a week, body weight gained to 37.9 kg., and symptoms disappeared. (Here I use the product of drawn blood (gr.) multiplied by immunization ratio of said blood as the unit of blood for transfusion.) Inoculation of antigen B was made and continued. In 10 days body-weight gained to 43.5 kg. and in 2 months by 11 times' inoculation 3,000 units became tolerable.

Example 4.—Girl of thirteen years old, tuberlosis peritonitis, right apical infiltration, laryngeal tuberculosis suspended, 38–39° C. fever continued, diarrhoea, appetite very poor, distension of belly, umbilical circumference 78 cm., laparotomy was indicated by the physician in charge as the only remaining way, but as the operation can provoke the chest symptoms, bad prognosis was pronounced. This patient was treated every day with the blood or serum of this invention. By the first transfusion all symptoms became milder, and after 5 treatments the umbilical circumference decreased to 66 cm., fever sank to ca. 37° C., after 8 treatments umbilical circumference and temperature became normal. And thereupon followed 4 treatments every other day, body-weight gained to 37.2 kg. All symptoms were suppressed. So the antigen B was inoculated. After the sixth inoculation with 100 units abdominal pains and diarrhoea appeared again, but after the applica-

tion of tubercle immune serum 1,330 units, the next day pains and diarrhoea ceased.

Although I have illustrated so far this invention in connection with tuberculosis, but it may also be applied to the other various infectious diseases, than tuberculosis, of which the existence of immunity is known. Namely by means of inoculating the viri of various infectious diseases and their products as antigen in gradational increasing doses into human bodies selected for high valued immunization training in the course of basal inoculation training, there can be produced in the body fluid passive immune bodies and thus prepared blood, plasma and serum for transfusion for therapeutic and prophylactic use against each corresponding disease.

One of the experiments on other infectious diseases of human beings than tuberculosis is as follows.

Example 5.—A person who had once typhoid fever and is always insensible to vaccine. To this person antigen B was inoculated in 24 months 10 times, beginning with 0.5 units. But finally only 70 units were inoculated with light fever and putrefaction. Thus the faculty of producing tubercle immunity manifested itself relatively low. And the immunization training was given up. Thereupon typhoid bacilli immunization training with typhoid antigen (officially indicated initial dose 0.5 cc., 2nd dose 1.0 cc. for adult) was carried out, beginning with 1.0 cc., in 9 months 10 times, the final dose was 80.0 cc. at one time.

Although I have described my invention setting forth specifically the use thereof in immunization against tuberculosis, it will be apparent from the general nature of the above description that it is intended not to be limited to tuberculosis. From work already done it is apparent that the principles here involved are adaptable to the treatment of many other infectious diseases, of which the existence of immunity is known, with equal advantages and from such work, it is believed that this invention is applicable to practically the entire field of immunization where gradational successive increasing doses of antigen can be used.

YU MAEKAWA.

Published May 11, 1943

Serial No. 264,072

ALIEN PROPERTY CUSTODIAN

PLASTER-LIKE MATERIALS FOR APPLICATION TO WALLS AND LIKE SURFACES

Ludwig Ephraim, Grossbothen, and Erich Papsdorf, Neuritz, Germany; vested in the Alien Property Custodian

Application filed March 25, 1939

This invention relates to a wall covering, for deadening sound and preventing resonance, which is applied in a plastic condition like cement or mortar. Wall plasters of this kind are known but usually the sound deadening effect is obtained mainly by means of cavities in the material, the plaster itself consisting of hard, sound-conducting material.

According to the present invention the sound deadening and particularly the resonance-damping effect of the wall covering is improved by using a material which, as regards its elasticity, is somewhat similar to cork. To this end the mass, in accordance with the invention, consists of glass wool or spun glass and a strongly swelling binding agent, preferably 5–8% calculated on the dry mass. To this mass there is added in accordance with the invention at least double its weight of liquid for causing the binding agent to swell.

The term "spun glass" is to be understood to mean not only a material consisting of glass fibres but comprises also artificially produced fibres made of other material and similar to spun glass. Mineral wools, the fibres of which are too short and generally contain impurities are, however, excluded.

The following mixture has proved particularly suitable.

Glass fibres 9–20%, preferably 15%.
Binding agent 0.7–1.8%, preferably 1%.
Ground wood 0–1.5%, preferably ⅔ by weight of the binding agent.
Water 70–90%, preferably about 83%.

In the example given above about 6–7.3% of binding agent are used, calculated on the dry mass.

It is also very advantageous if, after the mass has been thrown on the wall, it is beaten on the wall preferably with the aid of a grid-like implement. For this purpose a grid which consists preferably of thin wires which are arranged on a frame made of thicker wire and provided with a handle is particularly suitable. Obviously any other suitable instrumentality can be employed.

An important factor in obtaining a good acoustic effect is that the whole surface of the plaster, or at least a substantial part thereof, should be covered with a layer of paint, varnish or the like.

The mass in accordance with the invention may also be smoothed on the surface by means of a smoothing implement in the same way as cement and concrete. This is an advantage for example when the surface is subsequently provided all over with a layer of paint, varnish or the like. Smoothing may, however, also be undertaken in other cases for the purpose of avoiding irregular or too great sound absorption and in order to improve the appearance or to enable the wall to be cleaned more easily.

The smoothed wall covering can be provided with impressions or indentations by means of any suitable implement such as a board with projecting nails, such impressions being of considerable effect for absorbing sound.

According also to the present invention the surface of the material may be treated, after hardening, with a smoothing implement with the application of emery or may be treated with another form of grinding implement. By this means the tendency for dust to adhere to the surface is reduced to a minimum and a smoother coat of paint can be applied. Also by this means a surface which has to a certain extent a marble-like character may be obtained, even if it is not subsequently painted or coloured.

This effect can be made more pronounced by mixing the basic mass which consists of white spun glass with glass fibres of a different colour or of a different kind, such as for example blue Engelhaar, or with other coloured additions. Then after the surface has been ground it has the appearance of a patterned, for example blue, marble.

By means of the present invention it is also possible to form moulded blocks on a support and subsequently to detach the moulded blocks from the support and to use them without the original carrier.

When a mixture such as has been described is used it may also happen that the most porous layer which contains the least binding agent is in the middle while the layers on the outside and, in particular, that on the wall are harder.

LUDWIG EPHRAIM.
ERICH PAPSDORF.

PUBLISHED

MAY 11, 1943.

BY A. P. C.

L. EPHRAIM ET AL
PLASTER-LIKE MATERIALS FOR APPLICATION
TO WALLS AND LIKE SURFACES
Filed March 25, 1939

Serial No.
264,072

Fig. 1

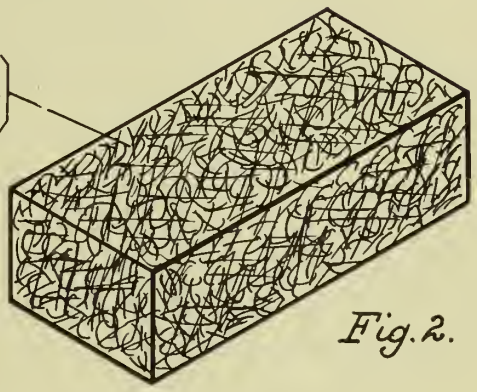

Fig. 2.

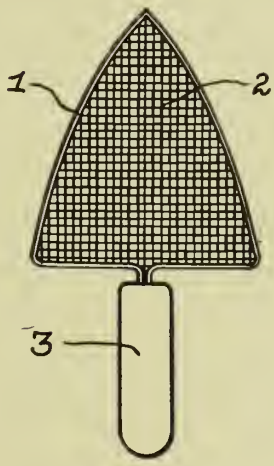

Fig. 3.

Inventors:
Ludwig Ephraim and
Erich Papsdorf

By Young, Emery & Thompson
Attorneys

Published May 11, 1943

Serial No. 265,597

ALIEN PROPERTY CUSTODIAN

GOVERNORS

August Lichte, Dessau-Alten, Germany; vested in the Alien Property Custodian

Application filed April 1, 1939

This invention relates to governors and particularly to governors for the fuel injection mechanism of internal combustion engines.

The primary object of the invention is to provide a governor which is responsive in different respects to different variable conditions of operation of the engine.

A structure has previously been known in which the rate or quantity of injection of a fuel injection mechanism has been varied in accordance with some physical value which varies during the operation of the engine, as, for instance, the suction in the intake manifold, which of course varies with the load on the engine. In addition, means have been provided for adjusting the ratio of such regulation, such adjusting means having been operated manually.

It has now been found that in many cases other physical values which vary during the operation of the engine must be taken into consideration in controlling the fuel injection mechanism. Such values may be, for example, the speed of the engine, the temperature, the atmospheric pressure, the latter being particularly important in the case of aircraft engines which operate at rapidly changing altitudes. A primary object of the invention is to provide a mechanism which automatically utilizes variations in one or more of these physical values to vary the rate, period or time of injection of the pump.

Particularly, the object of the invention is to provide such a device in which one of the physical values operates to vary the fuel pump setting, while the other physical value operates to vary the ratio of transmission with which the force developed by the first value acts on the fuel pump.

A further object of the invention is to provide a servo-motor for increasing the power exerted by the second physical value, to vary the transmission ratio.

Further objects and advantages of the invention will appear more fully from the following description, particularly when taken in conjunction with the acompanying drawings which form a part thereof.

In the drawings:

Fig. 1 shows in side elevation a mechanism embodying the invention;

Fig. 1*a* shows a modification of a portion of the structure of Fig. 1; and

Figs. 2, 3 and 4 show, respectively, other modified forms of the invention.

As shown in Fig. 1, the mechanism is intended to control the position of the control rod **10** of a conventional fuel injection mechanism **20**, such as an ordinary fuel pump. This rod is guided in a fixed guide **9** to slide longitudinally therein.

The position of the control rod **10** is accomplished from a rod **2** slidable in fixed guides **3** and **4**. Rod **2** is connected to a control mechanism **1**, including a piston **21** with which rod **2** is rigidly connected, a coil spring **22** urging the piston to the right, and a pipe **23** which may lead, for instance, to the intake manifold of the engine. It is obvious that variations in the intake pressure will vary the position of piston **21** and thereby of rod **2**.

Rods **2** and **10** are connected by a lever having two arms **6**, **6*a*** to which they are pivoted at **5** and **8**, respectively. The center portion of the lever **6**, **6*a*** is supported in a slidable sleeve **11**, mounted on a pivot **7** which forms the fulcrum of the lever.

The length of rod **2** may be adjusted by a turnbuckle mechanism **18**.

Such a construction has been previously suggested, in which the pivot **7** is fixed or is adjustable manually. It has been found, however, that it is desirable to bring into play certain other values which vary during the operation of the engine, and to utilize these values also for controlling the fuel pump. It has further been found that these values may conveniently be used, not to act directly on one of the rods **2** and **10**, but instead to shift the position of pivot **7** and thereby to vary the ratio of transmission between the rod **2** and the rod **10**.

To accomplish this result pivot **7** is mounted on the end of a rod **12** slidably mounted in fixed guides **13**, **13*a***. Rod **12** is connected at its other end to the movable member **117** of a ball governor **119** mounted on a shaft driven by the engine.

The operation of this mechanism is as follows:

As the speed of the engine varies, the position of balls **119** will vary and the rod **12** will be shifted up or down, thus changing the position of pivot **7**. This varies the relative leverage of the arms **6** and **6*a***, and thus varies the movement imparted to the rod **10** by any given movement of the piston **21** and rod **2**. At the same time, if the rod **2** remains stationary, movement of pivot **7** will of course cause a corresponding movement of the rod **10**. Thus the speed of the engine as well as the load enters into the control of the fuel pump **20**.

Fig. 1*a* shows a modified form of connection between the governor **119** and the rod **12**, to produce an amplification of the power of the

governor. In this modification, the movable member 117 of the governor carries a rod 25 pivoted to a sleeve 130 slidable on a lever 26. Lever 26 is pivoted at 129, and its other end is pivotally connected through a sleeve 128 to rod 12. By varying the relative position of sleeves 128 and 130, the leverage between the governor and the rod 12 can be changed.

Fig. 2 shows a modified form. In this construction, rod 12 is not of fixed length, but means are provided for adjusting its length, which may be desirable under certain conditions. For this purpose, the rod is provided with the threaded portions 122 and 123 connected by a threaded sleeve 121, the whole structure constituting a turnbuckle by which the length of the rod may be modified. In this structure, rod 2 is of invariable length.

In the form of the invention shown in Fig. 3, two variable physical values are simultaneously taken into account in determining the position of pivot 7. This form differs from Fig. 3 in that between the lower end of rod 12 and the movable member 117 of the governor there is inserted a bellows device 124, containing a gas or fluid under a predetermined pressure. It is obvious that by suitable construction of the member 124 its effective length will vary, either as a function of the atmospheric pressure or as a function of the atmospheric temperature as desired. Thus both the speed of the engine and the pressure, or temperature, may be taken into account in controlling the fuel feed mechanism.

In some instances, the power exerted by the ball governor or by any other control device may be insufficient to shift the pivot 7. In such a case the mechanism shown in Fig. 4 may be used. This includes the use of a servo-motor to control the position of pivot 7. Rod 12 is connected to a piston 126 movable in a cylinder 27, supplied by pipes 28 from a valve chamber 29. A control valve 125 is slidable in the chamber 29, and is connected, for example, to the barometric capsule 124. Fluid under pressure is supplied to the valve chamber 29 by a pump 127 from a suitable reservoir 30. Return fluid flows through pipe 31 back to the reservoir. A pressure relief valve 32 may be provided between the feed pipe 33 from pump 127 to valve chamber 129 and the return pipe 31.

The operation of this latter device should be evident. Variation in atmospheric pressure will cause a change in the effective length of the barometric device 124, which will shift valve 125 in one direction or the other. This will permit the flow of fluid under pressure to one side or the other of the piston 126, and will thereby shift the rod 12. The fluid from the other side of the piston will of course return to the reservoir through pipe 31.

AUGUST LICHTE.

PUBLISHED
MAY 11, 1943.
BY A. P. C.

A. LICHTE
GOVERNORS
Filed April 1, 1939

Serial No.
265,597
3 Sheets-Sheet 1

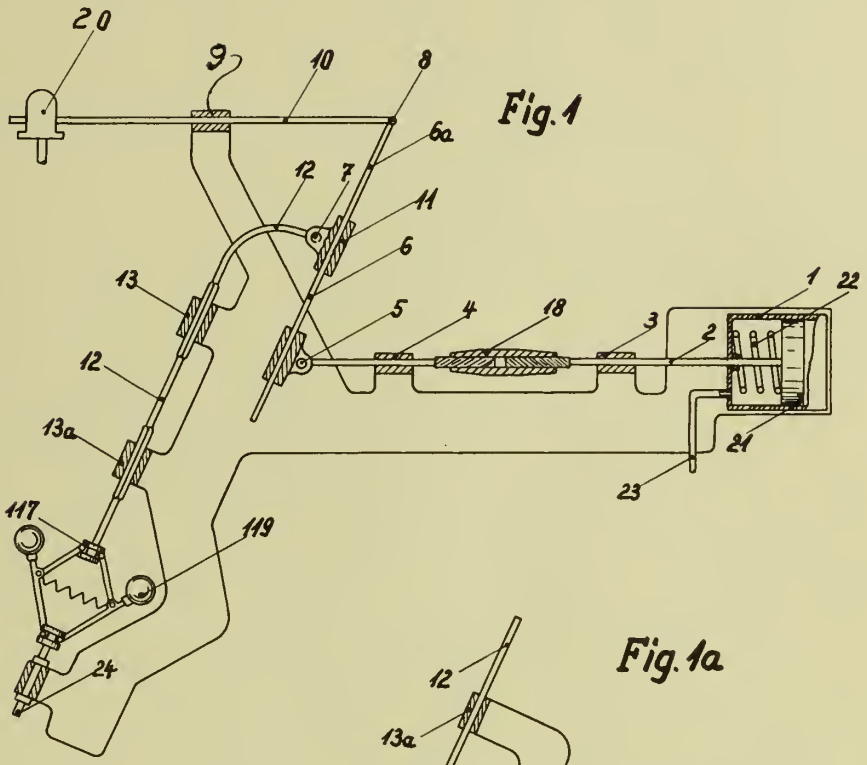

Fig. 1

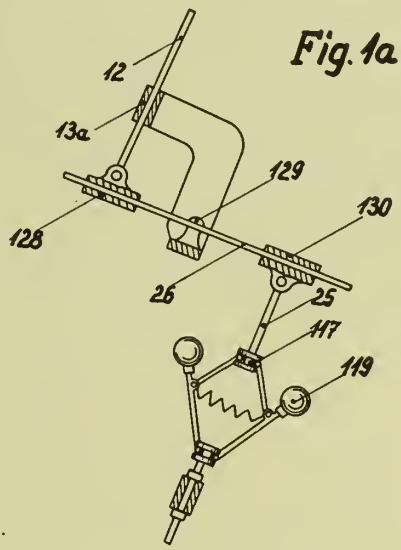

Fig. 1a

Inventor:
August Lichte,
Bailey & Larson
Attorneys

PUBLISHED
MAY 11, 1943.
BY A. P. C.

A. LICHTE
GOVERNORS
Filed April 1, 1939

Serial No.
265,597
3 Sheets-Sheet 2

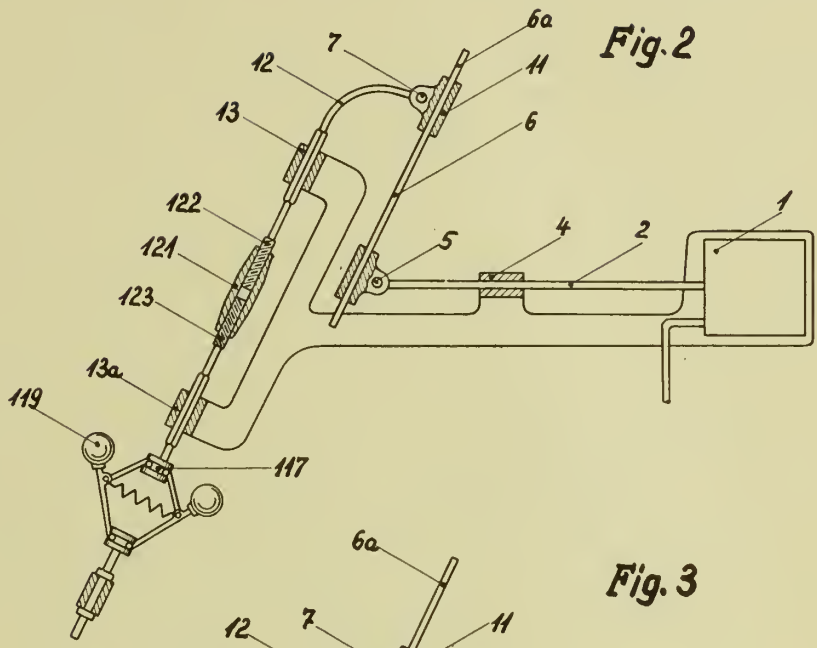

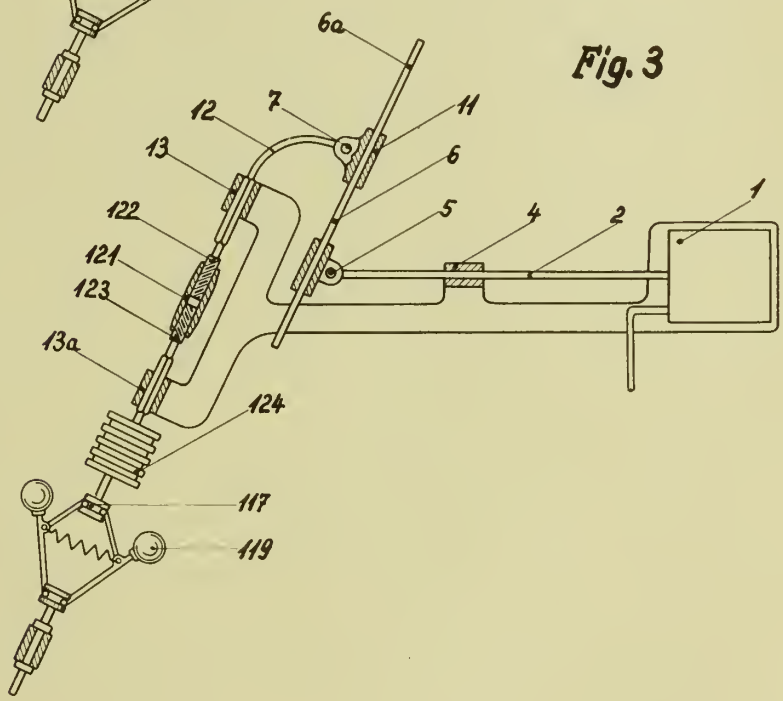

Inventor:
August Lichte,
Bailey & Pearson
Attorneys

PUBLISHED
MAY 11, 1943.
BY A. P. C.

A. LICHTE
GOVERNORS
Filed April 1, 1939

Serial No.
265,597
3 Sheets-Sheet 3

Fig. 4

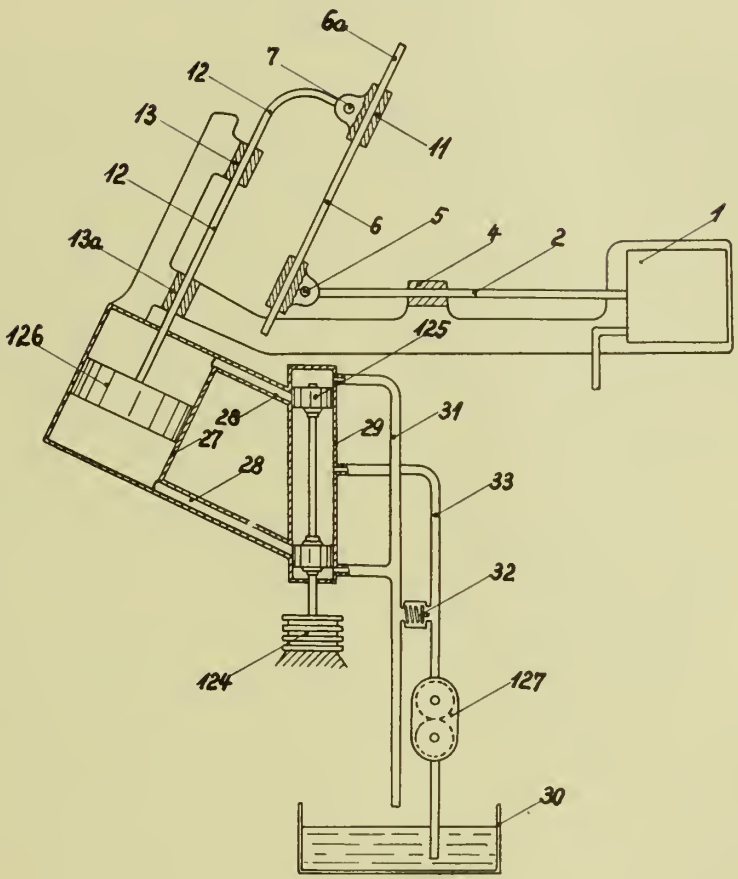

Inventor:
August Lichte,
Bailey & Larson
Attorneys

Published May 11, 1943

Serial No. 266,692

ALIEN PROPERTY CUSTODIAN

FLUID HANDLING MECHANISM

Jacques Muller, La Garenne-Colombes, France;
vested in the Alien Property Custodian

Application filed April 7, 1939

The present invention relates to the filling and emptying of reservoirs, and particularly to the nozzle, obturator and associated elements of a reservoir filling and emptying system.

One object is to provide means precluding an opening of the valve controlling the flow through the nozzle until the fluid within the nozzle is subjected to pressure thus preventing the emptying of the hose connection after separation of the nozzle from the obturator.

A further object of the invention is to provide means adapted to be subjected to the pressure of the fluid within the nozzle to lock the valve in closed position when the pressure is cut off and to permit opening of the valve only when the pressure within the nozzle is again restored.

Further objects and characteristics of the invention will appear as the description thereof proceeds, for a complete understanding of which reference should be had to the accompanying drawings wherein:

Figure 1 is a section in elevation of an obturator and filling nozzle,

Figure 2 is a section, to a larger scale, of the hydraulic joint used with the nozzle,

Figure 3 is a section of a filling spout provided with an automatic valve,

Figure 4 is a section in elevation of a filling spout of the nature of that of Figure 3, but provided however with a valve blocking mechanism,

Figure 5 is a section of a modified form of clamping mechanism illustrated in clamped position,

Figure 6 shows the mechanism of Figure 5 in released position,

Figure 7 is a spring adapted to be utilized with the clamping mechanism illustrated.

Referring to Figure 1, there is shown an obturator 1 adapted, as is well known, to be fixedly applied to the top, side or bottom of a reservoir or tank to be filled so as to be permanently carried by the reservoir or tank. The obturator incorporates a depression or throat 3, the upper edge 5 of which is transverse to the axis of the obturator and the lower edge 7 of which is inclined to the axis of the obturator, for a purpose which will hereinafter appear. The lower portion of the obturator is flanged inwardly as at 9, to provide a seal for the end of a nozzle which is adapted to be applied to the obturator.

The nozzle, generally designated 11, may be constructed of three cast sections 13, 15 and 17, the latter of which is adapted to communicate with a hose connection (not shown) leading to a source of fluid or liquid. The mid section 15 of the nozzle is screw-threaded at 19 for the reception of the upper section 12 adapted to be screw-threaded thereon. A spider 21 is disposed on an offset 23 formed in the mid section 15, and is held assembled against the offset by screwing up the upper section 13 unto the mid section 21. Suitable sealing means of any desired nature such as rubber or fiber washers 25 are inserted at each side of the spider.

The mid section 15 is provided with an annular laterally extending flange 27, adapted to be received within a corresponding depression 29 formed in the lower section 17. Suitable sealing means are provided as at 31. The arrangement is such as to permit the lower and mid sections 17 and 15 to be rotated with respect to each other about an axis passing through the axis of the flange 27.

Section 17 is provided with bores 33, 35 and 37, of different diameters. Bore 37 is adapted to screw-threadedly receive a spider 39 for a purpose which will hereinafter appear. Bore 35 is adapted to receive a bushing 41 between which and a shoulder 43 formed between bores 33 and 35, a diaphragm 45 is adapted to be clamped. Slidably disposed within the bushing 41, is a piston 47 having a convex face 49, the piston being urged towards the diaphragm 45 by a spring 51, one end of which abuts against the piston 47 and the other end against the spider 39.

The spider 39 is provided with a flange 53, bored out as at 55, to receive a sleeve 57, having a flanged end 59 engaging the spider 55, in turn positioned within a bore 61 provided in the mid section 18. The sleeve is provided with a section of smaller diameter 63 on which is slipped a second sleeve 65 adapted to be pinned or fixed in any desired manner to the sleeve 57. The sleeve 57 is formed with a central bore 67 in which a rod 69 connected to the piston 47, as by pin 71, is adapted to slide. The bore 61 in the mid section 15 is also provided with a shoe 73 slidable therein a screw 75 and wing nut 77 being adapted to displace the shoe 73 to the right or to the left for a purpose which will hereinafter appear.

Within bore 33 of the section 17, is provided a piston 79 having a convex face between which and piston 41 the diaphragm 45 is disposed. Piston 79 is fitted with a rod 81 extending through a bore 83 in a bushing 85 disposed within a bore 87 of a wall of the section 17. Suitable sealing means such as seal 89 is provided between the bushing 85 and the rod 81. The rod 81 is provided with an enlarged head 91 from which extends a pin 93 having a threaded end for the

reception of a lock nut 95. The pin 93 passes through, with considerable play, an opening 97 in a lever member 99, pivoted at 101 in a boss 103 formed on the lower section 17. A lever member 105, having an opening 107 therein through which pin 93 passes loosely, is held by the lock nut 95 in abutting relation with respect to lever 99, the arrangement being such however that a certain sliding of the lever 99 with respect to the lever member 105 is permitted. Lever member is pivoted at 109 on the mid section 15, and provided with an extending arm 111, for a purpose which will hereinafter appear.

The upper end of the section 12 is provided with an annular offset 113 and a threaded flange 115. Between the flange 115 and a cap 117, adapted to be threaded thereon, is clamped a seal 119, portion 121 of which is adapted to extend into contact with a wall of the obturator when the nozzle is assembled thereon. An annular spring 123 is provided to urge the washer into closer contact with the wall of the obturator. The section 13 is further provided with an annular internal flange 125 forming a seat for the washer 127 or other suitable seal adapted, when the nozzle is assembled on the obturator, to be urged into tight contact with the internally flanged base 9 of the obturator.

A sleeve 129 encompassing the upper section 13 of the nozzle and formed with an inwardly inclined cam-like portion 131 is centered upon the section 13 by pins 133—135 or any centering means found appropriate. The sleeve 129 is adapted to be reciprocated axially with respect to the section 13 and for this purpose the sleeve is connected by any means found suitable (not shown) to arm 111 of the lever 105. An annular spring 137 having an internal diameter normally greater than the diameter of the obturator 1 is held within the sleeve 133 by means of the cap 117 and the cam portion 131 of the sleeve.

It will be obvious that when the nozzle is assembled on the obturator, on displacement of the sleeve 129 upwardly (fig. 6), the annular spring 137 is permitted to expand whilst on displacement of the sleeve 129 downwardly (fig. 5), the annular spring 127 is urged by the inclined surface 131 into the throat or depression provided in the obturator to hold the obturator and nozzle in fixed relation with respect to each other.

Within a bore provided therefor in the spider 21, is positioned for sliding movement therein a hollow rod 139 on the upper end of which is mounted in any desired manner a valve 141 adapted to cooperate with a seat 143 formed on the flange 125, so as to control the flow of fluid through the nozzle. A pin 145 is positioned within the hollow rod 139 and between the base of the hollow 147 and the pin 145 is disposed a spring 149 which acts as a cushion on closing the valve. The rod 139 carries a transverse pin 151 between which and the lower end of the pin 145. engages the end of a lever 153 pivoted at 155 on a stirrup 157 carried by the mid section 15.

Within the mid section 15 and eccentrically thereof is provided a bore 159. Extending through the bore 159 and seated on a bearing 161, formed in the end thereof is the valve operating shaft 163. The shaft 163 is held within the bore by a threaded bushing 165, threaded into the base of the bore and through which a portion of the shaft 167 of reduced section passes. A handle 169 is connected to the reduced portion of the shaft 167 in any desired manner permits the rotation of the shaft in the bore. It is to be noted that the bore 159 is intersected by the axes of the piston rod 69 and that the shoe 73 may be moved into engagement with the shaft 163 to clamp the latter in one position and may be moved away from the shaft in order to release it for rotation by the handle 169. The shaft 163 adjacent the lever 153 is formed with an helical groove 171 in which is positioned a rounded head 173 provided on the lever 153. It will be obvious that on rotation of the shaft 159, the helical groove will effect operation of the lever 153 and thus closing or opening of the valve 141. Provided in the base of the shaft 163 and co-axial with the piston rod 69 is a bore 175. When the shaft 163 is turned into the position corresponding to closure of the valve 141, the bore 175 is positioned opposite to the piston rod 169, so that displacement of the piston rod 169 to the right will cause it to engage within the bore 177 and thus lock the shaft 163 in position.

Intermediate its ends, there is provided in the shaft 163 a further transverse bore 179. Adjacent the bore 179 and slidably engaged in a bore 181 formed in a boss 183 on the mid section 15, is a pin 185. The pin is carried by a spring bellows-like organ 187 that is positioned within the section 15 and adapted to be subjected to the pressure of the fluid existing therein or passing therethrough. The bellows 187 may be conveniently carried by a plug 189 which may be threadedly received in an opening 191, provided in the mid section 15. It will be evident that when the valve actuating shaft 163 is turned to the position corresponding to valve 141 closed that the pin 185 will be co-axial with the bore 179 formed in the shaft 163. At this time, if the pressure on the fluid within the nozzle is cut off the bellows member 187 will expand and thrust the pin 185 into bore 179, thus locking the valve actuating shaft 163 in position with the valve 141 closed.

The operation of the device is briefly as follows:

In order to clamp the nozzle to the obturator of a reservoir to be filled, lever 99 must be moved inwardly, against the pressure of spring 51, toward the section 17 in order to raise the sleeve 129 and thus permit the spring 137 to expand. Subsequently, the nozzle is adjusted into position on the obturator as shown in figure 6 and thereon the lever 99 is released and the spring 51 urges it outwardly to lower the sleeve 129. This results in forcing the spring, through the intermediary of the cam portion 131, into the groove or throat 3 and thus clamps the obturator and nozzle in assembled relation.

Assuming that the nozzle is clamped in position on the obturator and that the valve 141 is closed. it will be seen from figure 1 that only when the valve is closed may the lever 99 be operated against the pressure of spring 51 to raise the sleeve 133 and thus release the spring 137 from clamping position. Since the bore 175 in the valve operating shaft 163 is only concentric with the pin 169 of the piston 41 when the valve is in closed position, it will be obvious that it is only when the valve is in closed position that lever 99 may be moved towards the section 17 to raise the sleeve 129. During this operation, piston 47 is moved to the right against pressure of spring 51 and the piston rod 69 moves into the depression 175 in the valve operating shaft 163. It should be noted that when the valve is in closed position and the pressure to the nozzle is cut off, the bellows 187 is permitted to expand and thus forces

the rod 185 into the bore 179 in the valve operating rod 163, thus blocking the valve in closed position.

Such an arrangement, as will be obvious, precludes an operator from separating the nozzle from the obturator when the valve is open and further precludes him, after the removal of the nozzle from the obturator, from emptying out the liquid contained in the hose connection by which the nozzle is connected to the source of supply. Thus such an arrangement precludes therefore unauthorized emptying of the hose and assures that the proper measure of liquid will be forced into the tank.

Referring to figure 3, there is provided a spout 201 to the upper end of which is screw-threaded a member 203. A bushing 205 is screw-threaded into the member 203 and the lower end thereof is formed as a valve seat 207. Within a spider 209 appropriately fixed in the bushing 205 is slidably mounted in a bore 211 a rod 213 to one end of which is a fixed plate valve 215. The valve is urged upwardly on its seat by a spring 217 disposed between an abutment 219 on the rod 213 and the upper face of the spider 209. The spring operates to maintain the valve closed until the pressure of the fluid acting downwardly on the plate 215 is sufficient to overcome the pressure of the spring and thus permit the valve to open.

Referring to fig. 4, the valve body consists of sections 221, 223, appropriately fixed together in any desired manner. A valve casing 225 is clamped between the two sections 221 and 223 of the valve and provided at its upper and lower ends with valve seats 227 and 229. A spider 231 within the valve casing 225 is provided with a bore 233 adapted to receive a pin 235. The pin has fixed thereto at its lower end a plate valve 237 which is urged toward its seat 229 by a spring 239 positioned between the abutment 241 on the rod 235 and the upper face of the spider 231.

A second valve 243 adapted to seat upon the valve seat 237 is positioned by a rod 245 suitably fixed within the body section 221, in any desired manner, coaxially with respect to the valve casing 225. The valve 243 carries a valve stem 247 and both the valve and the valve stem are bored out and slidably mounted upon the rod 245. A spring 249, positioned between the casing 221 and an abutment 251 on the valve stem 247, continually urges valve 243 towards its seat. The valve is raised from its seat against the pressure of spring 249 by a cam 253 pivoted at 255 and adapted to be suitably operated by a handle (not shown), the cam being positioned adjacent to the abutment 251. A pin 257 guided in a bore 259 in a fin 261 formed on the valve body is adapted when moved to the left to engage over the abutment and preclude opening of the valve. The pin 251 is carried by a spring bellows-like collapsible chamber 263 which may be conveniently carried by a plug 265 threaded into an opening 267 formed in the casing co-axially of the pin 251. It will be clear that when the pressure is admitted to the valve, it will cause compression of the collapsible chamber 263 and will thus effect withdrawal of the pin 251 out of the path of the abutment 259. The cam 253 may now be operated to open the valve. It will be clear that as long as the valve is closed it may not be opened until the pressure is applied to the valve to cause collapse of the chamber 263.

Referring to figures 5 and 6, wherein corresponding reference numerals indicate the same elements as in figure 1, it is to be noted that the formation of the cam surface 131 has been modified. In figures 5 and 6 this surface, instead of consisting of a plane incline, comprises cam surfaces 132, 134. With this formation of the cam surfaces, it will be apparent that on lowering of the sleeve 129, the spring 137 will first be engaged by the cam surface 132 which surface by the way cuts the axes of the nozzle with a greater angle than does the surface 134. Consequently, the surface 132 operates to compress the spring 137 rapidly and urge it into the throat or depression No. 3 Subsequently, on further lowering of the sleeve 129, the surface 134 of lesser angle, operates to tighten the spring in the throat or depression. In this connection, it should be noted that in clamped position of the nozzle on the nipple, the force of the spring 137 opposing its compression, has a component parallel to the axis of the nozzle and nipple operative to urge the nozzle and nipple towards each other to compress the seal at 127.

Referring to figure 7 there is illustrated a type of spring 137 which has shown itself particularly effective. This spring comprises an annular spiral spring 138 within the interior of which is disposed a split spring ring 140, the split in the spring ring 140 being sufficiently large to permit considerable compression of the coil spring 138. This split spring ring operates to preclude deformation of the coil spring 138 out of the normal plane of the spring but permits contraction of the coil spring 138.

This application is a division of my application No. 194,919, filed in the United States Patent Office on March 9, 1938.

JACQUES MULLER.

PUBLISHED
MAY 11, 1943.
BY A. P. C.

J. MULLER
FLUID HANDLING MECHANISM
Original Filed March 9, 1938

Serial No.
266,692
4 Sheets-Sheet 1

FIG. 1

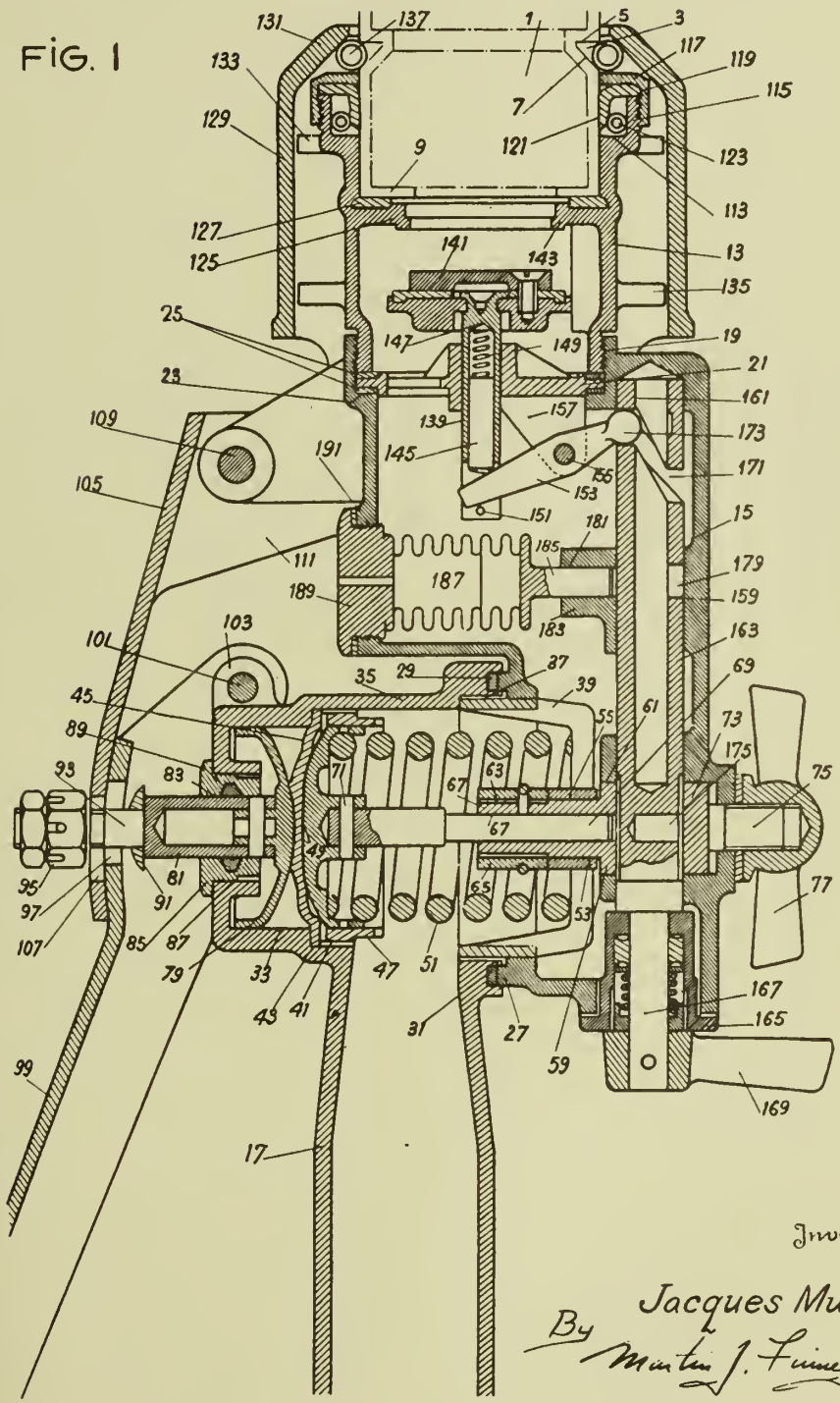

Inventor.

Jacques Muller

By Martin J. Finnegan

Attorney.

PUBLISHED
MAY 11, 1943.
BY A. P. C.

J. MULLER
FLUID HANDLING MECHANISM
Original Filed March 9, 1938

Serial No.
266,692
4 Sheets-Sheet 2

FIG. 2

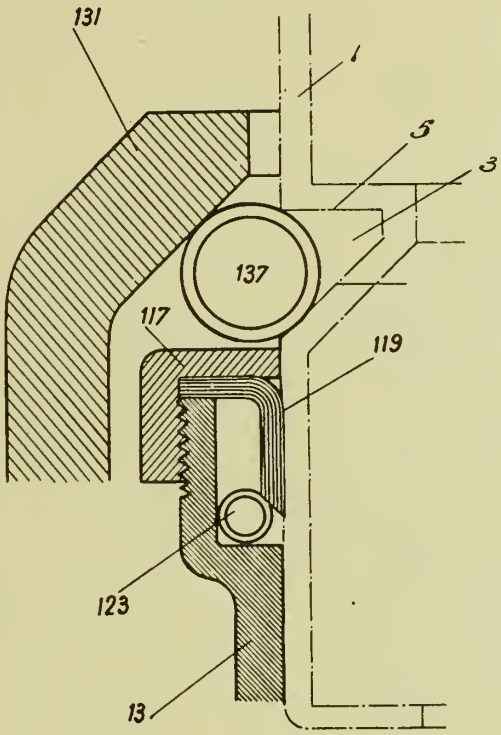

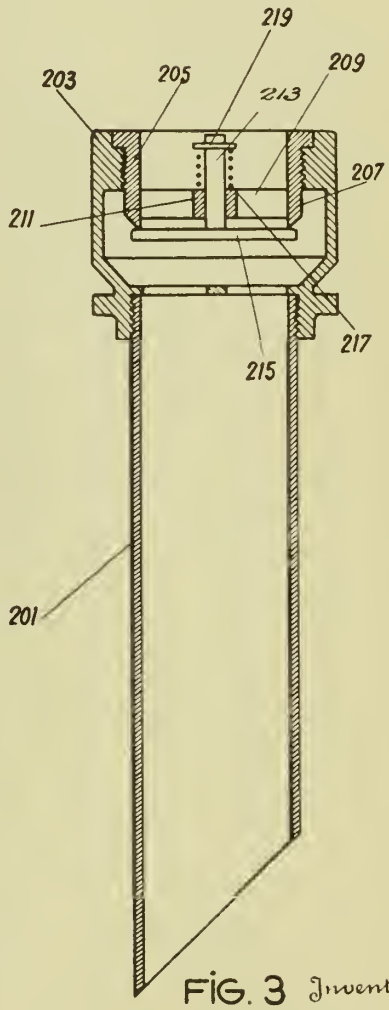

FIG. 3

Inventor.
Jacques Muller
By Martin J. Finnegan
Attorney.

PUBLISHED
MAY 11, 1943.
BY A. P. C.

J. MULLER
FLUID HANDLING MECHANISM
Original Filed March 9, 1938

Serial No.
266,692
4 Sheets-Sheet 3

FIG. 4

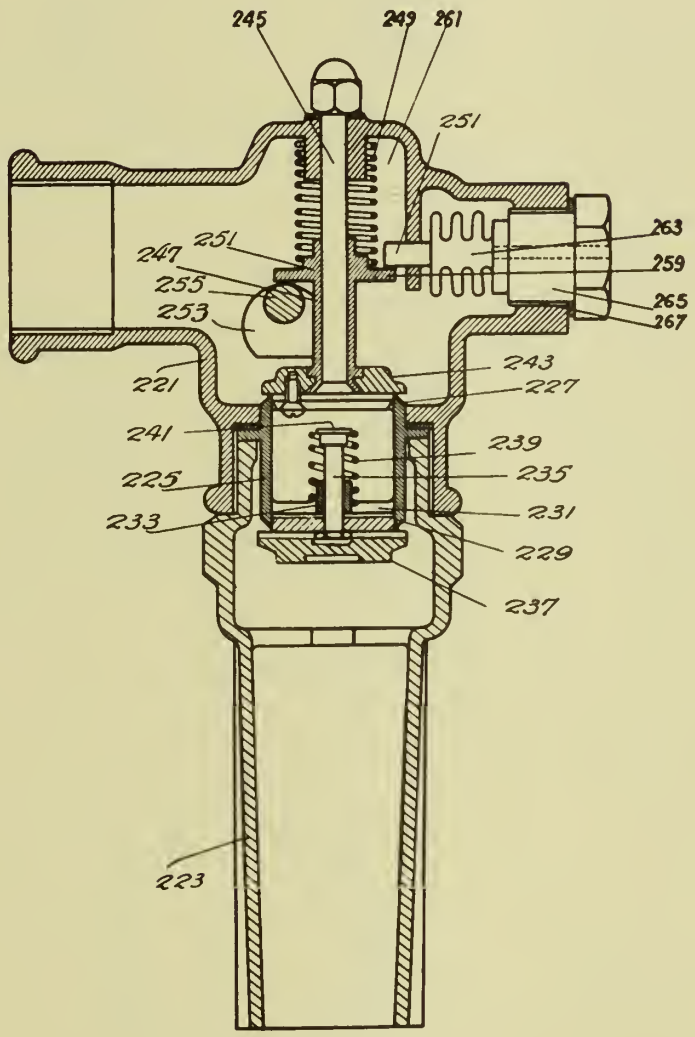

Inventor.
Jacques Muller
By Martin J. Finnegan
Attorney.

PUBLISHED
MAY 11, 1943.
BY A. P. C.

J. MULLER
FLUID HANDLING MECHANISM
Original Filed March 9, 1938

Serial No.
266,692
4 Sheets-Sheet 4

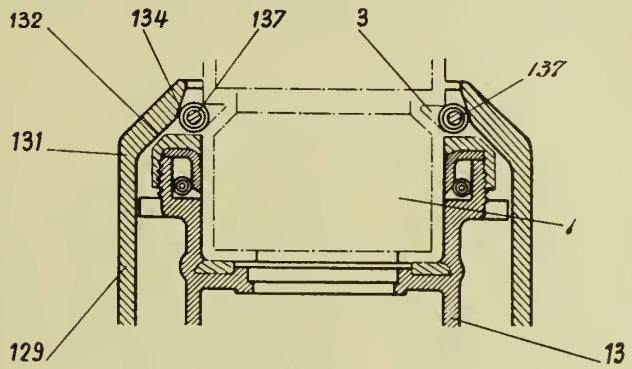

FIG. 5

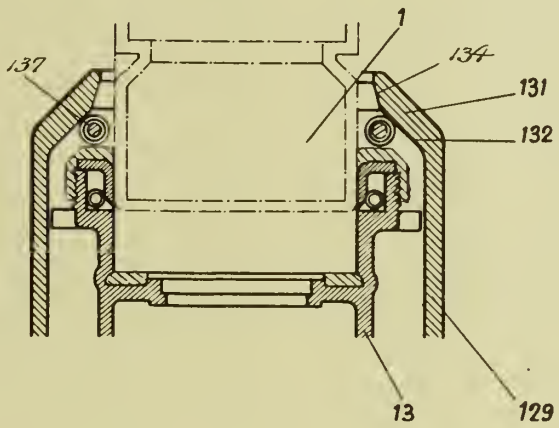

FIG. 6

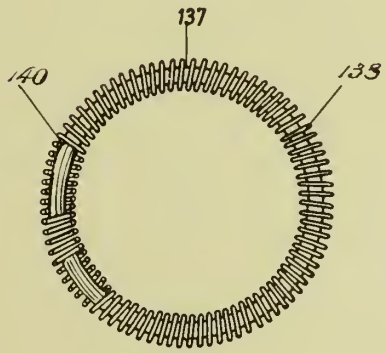

FIG. 7

Inventor.
Jacques Muller
By Martin J. Finneyan
Attorney.

ublished May 11, 1943

Serial No. 267,209

ALIEN PROPERTY CUSTODIAN

NUT LOCKING DEVICE

Adolf Fehrmann, Hamburg, Germany; vested in the Alien Property Custodian

Application filed April 11, 1939

The known nut locking devices, comprising ›ringy locking tongues extending from a circu- r disc, radially engaging in the convolutions the bolt thread and bent upwardly from the ane of the disc, having for their object to pre- .ent the locking device and the nut from becom- ing loose by exerting radial pressure, effect the required locking only as long as the radial pres- ure exerted by the tongues upon the convolu- ons of the thread is sufficiently great. Should is pressure be reduced by lengthening of the ›olt owing to heat, expansion or the like, the possibility arises that the locking device and the nut become loose.

According to the invention this defect is elim- inated by providing that the side faces of each locking tongue are disposed radially or at an angle with reference to the radial direction, the inner edge of each tongue, which makes contact with the thread of the bolt, being disposed at an increasing distance from the centre of the lock- ing device in the tightening direction thereof.

Various embodiments of the invention are dia- grammatically illustrated by way of example in the accompanying drawing, wherein:—

Fig. 1 is a plan view of the nut locking de- vice,

Fig. 2 shows the same locking device in sec- tion on the line II—II of Fig. 1,

Figs. 3 and 4 illustrate another embodiment of the locking device in plan view and in section on the line IV—IV of Fig. 3.

Figs. 5 and 6 show a further embodiment of the locking device in plan view and in section on the line VI—VI of Fig. 5,

Fig. 7 shows a locking device according to Figs. 1 and 2 in side elevation on a bolt with nut,

Fig. 8 shows a locking device according to Figs. 5 and 6 in elevation on a bolt with a nut.

The nut locking device according to Figs. 1, 2 nd 7 substantially consists of a disc shaped ember 1, which is provided on the inner side with locking tongues 2 extending approximately radially inwards and at its periphery with a downwardly or upwardly beaded edge 3. The sides 4, 5 of each locking tongue extend for ex- ample radially, or approximately radially. They may also extend at an angle with reference to the radial direction, as shown in Fig. 3. The inner edges 6 of the locking tongues 2 are so dis- posed that in the direction in which the locking device is tightened their distance from the cen- tre of the locking device or the central axis of the bolt increases. It is advisable to form the disc shaped portion 1 of the locking device so that it is domed and springy in the direction of the end of the bolt. Similarly, the locking tongues 2 may also be springy.

In the embodiment shown in Figs. 3 and 4 the side edges 4, 5 of each locking tongue are dis- posed at an angle with reference to the radial direction in such a manner that they extend at an angle backwards from inside outwards in the tightening direction of rotation. The outer edge 7 of the locking device is bent upwards hexag- onally. The upper edge 8 of the rim 7 so formed is rounded upwardly from one corner to the other, but it may also be straight and parallel to the bearing surface of the locking device, as shown in Fig. 6. The rest of the locking device is constructed as in Figs. 1 and 2 and the same reference numerals are employed.

In the embodiment shown in Figs. 5 and 6 slots 9 are disposed between the individual lock- ing tongues 2. In this embodiment the side edges of the locking tongues extend from the middle of the slot 8 disposed therebetween arcuately or inclined towards both sides, so that the slots 8 are wider at the thread of the bolt than at the annular portion 1 of the locking device. How- ever, the side edges 4, 5 may also extend radi- ally, so that the slots 9 are of the same width. In the first mentioned case the locking tongues are stronger.

In Fig. 7 the embodiment according to Figs. 1 and 2 is shown in conjunction with a bolt 10 and a nut 11. This embodiment, wherein the locking device is made of comparatively thin sheet metal, is particularly suitable for a fine thread. Fig. 8 shows the locking device accord- ing to Figs. 5 and 6 in conjunction with a bolt 10 and nut 11, which have a coarse thread. In manufacturing the locking device of thin springy sheet metal the locking device, same may be passed over the thread of the bolt up to the nut to be locked and it may be brought into its lock- ing position by light turning. In the locking position the locking tongue lying deepest is wedged between the bolt thread and the nut thread and ensures additional security against loosening of the locking device and of the nut. When the locking device is passed over the thread of the bolt or when the same is screwed on the bolt the locking tongues 2 yield and are bent over towards the end of the bolt and the part thereof which protrudes farthest inward is pressed after the manner of the thin edge of a wedge firmly against the convolutions of the thread of the bolt. When the locking device is

tightened by rotation to the right the tip of the wedge formed by the edge **6** of the locking tongue **2** lies behind. During rotation to the left or in the direction of release of the locking device and nut this tip of the wedge is at the front and prevents any unintentional detachment of the locking device and nut from the bolt, even if these are lengthened by heat or undue stress and the nut moves away from the surface against which it bears. When removing the locking device from the bolt the nut is first tightened a little more, so that the pressure between the nut and the locking device is reduced. The locking device can then be removed by turning it backwards, simultaneously pressing it down on to the nut or by lifting it off the bolt upwards. The inner diameter of the opening left free by the locking tongues is slightly smaller than the inner diameter of the thread, so that the locking tongues are resiliently bent upwards or downwards when the locking device is mounted on the bolt. In the production of the locking device the tongues **2** are punched out so that the finished locking device has the shape shown in Figs. 1, 3 and 5 in plan, being adapted to the shape of the bolt thread the locking tongues being variously inclined with reference to the plane of the disc **1** in accordance with the pitch of the bolt thread.

ADOLF FEHRMANN.

PUBLISHED
MAY 11, 1943.
BY A. P. C.

A. FEHRMANN
NUT LOCKING DEVICE
Filed April 11, 1939

Serial No.
267,209

Fig. 1

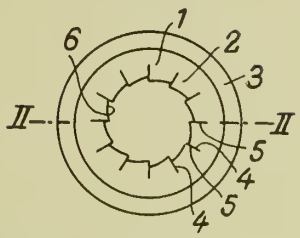

Fig. 3

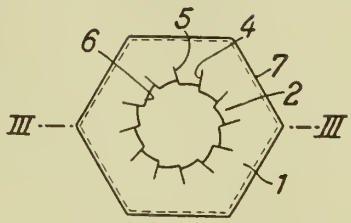

Fig. 2

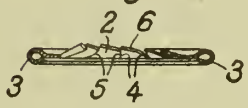

Fig. 4

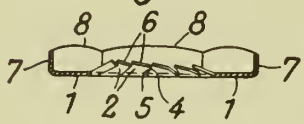

Fig. 7

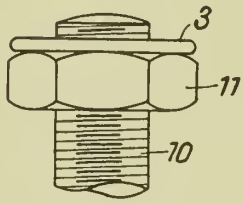

Fig. 5

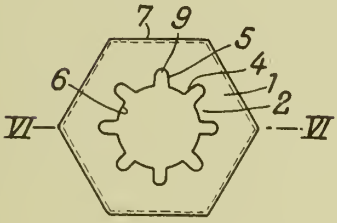

Fig. 6

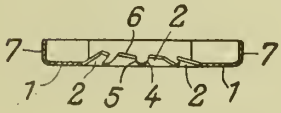

Fig. 8

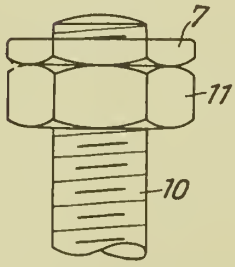

Inventor:
ADOLF FEHRMANN
By Haseltine, Lake & Co.
Attorneys

Published May 11, 1943

Serial No. 268,421

ALIEN PROPERTY CUSTODIAN

SELF STABILISING BOATS OR OTHER FLOATING BODIES

Oskar Tietjens, Berlin-Schmockwitz, Germany; vested in the Alien Property Custodian

Application filed April 17, 1939

This invention relates to a water craft or other floating body with one or more water supporting surfaces (designated *w*) extending longitudinally at right angles to the hull and the invention consists in the fact that for the purpose of automatically varying the angle of incidence of the water supporting surface *w* when the speed of the floating body varies the succeeding surface elements of the water supporting surface *w* which extend over the entire depth of surface and cut through the water surface are at a greater distance from the bows of the floating body the deeper they lie, so that the resultant of the hydrodynamic buoyancy forces displaces the water supporting surface elements rearwards as the emergence of the water supporting surfaces *w* from the water increases.

Under these circumstances it is possible to provide only a single water supporting surface, subdivided several times if need be, longitudinally of the floating body, and in this arrangement the height of the moving floating body above the surface of the water can be arbitrarily varied in conjunction with an arrangement for shifting the centre of gravity of the craft.

For the purpose of obtaining a floating body capable of stabilising itself both longitudinally and transversely it may be particularly advantageous, when using supporting surfaces according to this invention which run through athwartships and extend, when the static floating position is departed from, above the surface of the water, for these surfaces to be bent or curved in a manner already suggested by me and in such a way that the horizontal projection of all the supporting parts in the water at any time is surrounded by a minimum circle the centre line of which lies above the axis of the centre of gravity, in all positions of the floating body.

According to a further advantageous embodiment of the present invention the lower part of the water supporting surface *w* which in this case may with advantage be constructed horizontally is given the form of an arrow with a buoyancy number decreasing towards the ends.

Finally the water supporting surface arrangement may be constructed in such a way that additional water supporting surfaces of a kind known per se and of which one or more may be employed, may be provided in addition to the water supporting surface or surfaces according to the present invention, the immersed part of which depends as to size on the height of the floating body, but which must be of such a shape that their superficial area remains the same when the height of the floating body above the surface of the water changes.

The invention relates therefore to a vessel or other floating body, in which by means of water supporting surfaces of a novel kind placed underneath the floating body or in which by means of new kind of cooperation of the water supporting surfaces according to the present invention and of which there may be one or several, with water supporting surfaces known per se, the floating body while in motion is lifted out of the water in such a way that when the speed of the water craft automatically changes a change in the angle of incidence of the water supporting surfaces takes place automatically and without any separate or special means of assistance.

In boats or similar floating bodies, which can be balanced or supported completely by water supporting surfaces while in motion, the hydrodynamic buoyancy increases in general with increasing speed. If the hull of the boat be already lifted right out of the water by the buoyancy force of the water supporting surfaces, the dynamic buoyancy is therefore equal to the weight of the boat, and this buoyancy must also remain the same when the speed of the boat varies, as otherwise the hull of the boat would either sink back into the water again or would be lifted out of the water by the whole of the water supporting surfaces.

Measures are already known and used moreover either alone or in combination, for the purpose of ensuring that the buoyancy shall remain the same when the hull of the boat is lifted right out of the water, when the speed of the boat varies. It has therefore been suggested that the water supporting surfaces should be arranged in such a way that the surface of those parts of the water supporting surfaces which are immersed in the water is smaller or larger according as the hull of the boat in motion is more or less high above the surface of the water. It has also been recommended to vary the angle of incidence of the water supporting surfaces by rocking or rotating them about an axis perpendicular to the direction in which the boat is travelling. A third measure which has been very often described consists in varying the angle of adjustment of the water supporting surfaces by inclining the whole boat and using at the same time special means of assistance.

The first measure, according to which the hull of the boat is lifted higher and higher above the surface of the water as the speed increases, while the surface of those parts of the supporting sur-

face which remain in the water continually decreases, is—it is true—simple per se, but is very limitcd as to the range within which the speed can be increased. In other words, if the hull of the boat be lifted at a speed away from the surface of the water in a straight line above the surface thereof, the greatest speed attainable will in general not exceed to the desired extent the speed at which the boat is lifted away from the surface of the water if it be desired to avoid lifting the hull of the boat and therefore its centre of gravity to a very great height which would be of great disadvantage as regards the stability of the boat particularly when passing round bends.

The second method of alteration of the angle of incidence of the water supporting surface by rocking or rotating it presupposes a movability of the supporting surface whereby considerable constructional difficulties arise. In any case a rigid attachment of the water supporting surface to the hull of the boat is much to be preferred. Adjustment of the angle of incidence to speed corresponding to the speed at which the boat may be travelling at any particular moment by the driver would always demand his attention and a not inconsiderable amount of skill. If instead of this, as has been variously suggested, an automatic adjustment of the angle of incidence be provided, say by using floats or sliding surfaces sliding on the surface of the water or by making use of the pressure of the water acting on suitable pistons, these arrangements again mean a considerable complication.

The third method of alteration of the angle of incidence of the water supporting surface by inclining the whole boat is connected with arrangements specially provided for this purpose, whether it be for example of such a nature that one of the water supporting surfaces used can have its angle of incidence adjusted by hand or automatically and thereby bring about an inclination of the hull of the boat and consequently a change in the angle of incidence of the remaining water supporting surfaces, or whether it be of such a nature that inclination of the boat is produced by a suitable method of shifting its centre of gravity. In order to enable the angle of incidence of the water supporting surfaces to be adapted to the particular speed of the moment by inclining the hull of the ship, it is also suggested that floats or sliding surfaces connected to the hull be provided at a considerable distance in front of the water supporting surface or in front of centre of gravity, and the hull supported as it were thereby at the front on the surface of the water. Apart from the fact however that if this course be adopted it is very difficult to vary the height of the hull while the speed at which the boat is driven remains the same and for example to the movement of the waves at any particular time, an arrangement of this kind exhibits very uneasy travelling properties. This results from the following: in order to avoid cavitation at the water supporting surfaces, only very low buoyancy numbers that is to say only very small angles of incidence, may be employed as is well known especially at the high speeds which are desirable per se. The result of this is however that even very small variations in the angle of incidence, namely variations of from 1 degree to 2 degrees, have an extraordinary effect on the buoyancy force of the water supporting surface and thereby cause a violent up and down movement of the hull of the boat. Such variations in the angle of incidence are however already produced by the waves which are small in proportion to the length of the boat, even when the supporting float devices are placed a long way in front of the centre of gravity. If the speed of the boat is so great and the waves are so short that owing to the inertia of mass of the hull of the boat it cannot follow the rotation about the transverse axis quickly enough, the float or the sliding surface loses its grip on the surface of the water and strikes repeatedly with great violence against the waves which is accompanied by additional resistance.

In the form and arrangement of the water supporting surfaces according to the present invention all disadvantages of previous measures are avoided. The essential feature of the invention consists in the fact that when the speed of the boat increases a corresponding reduction in the angle of incidence takes place automatically and when the speed of the boat decreases a corresponding increase in the angle of incidence takes place, and this takes place moreover without the hull of the boat having to be lifted to an excessive height above the surface of the water. It also takes place without the water supporting surfaces or a part of them having to be arranged to rock or rotate for this purpose.

The automatic adjustment of the angle of incidence when the speed of the boat varies and also the stabilising action of the water supporting surface according to this invention on the transverse axis of the boat is connected with the fact that the resulting buoyancy force moves towards the rear of the boat as the water supporting surface rises more and more out of the water and towards the bows of the boat as the amount by which the boat is lifted out of the water decreases. It is known to attach a number of separate substantially horizontal water supporting surfaces to a rearwardly inclined strut or to arrange separate water supporting surfaces in a different way, namely an echelon rearwards and downwards in order to thereby prevent as far as possible foreign bodies which may be floating in the water from adhering to the strut or the water supporting surfaces. Such arrangements of separate water supporting surfaces have also the property to a very great extent of forcing the resulting buoyancy force of the of the echelonned water supporting surfaces towards the rear as the amount by which the boat rises out of the water increases. They possess however a number of disadvantages which give rise to difficulties when compared with the water supporting surface according to the present invention. Thus for example the free ends of the rearwardly echelonned separate supporting surfaces which are in the water very easily give rise to cavitation at the great speeds which are desired per se in contradistinction to the water supporting surface according to this invention in which such free supporting surfaces situated in the water do not exist. In particular however the resulting buoyancy force of the supporting surfaces which remain in the water does not move continuously towards the rear when the amount by which the echelonned separate water supporting surfaces rise out of the water increases, as it does according to this invention but moves irregularly and by jerks so that therefore no automatic and accurate adjustment of the angle of incidence to correspond to the speed of the particular moment is possible.

The main feature of the water supporting surface of the present invention consists in the fact

that the surface elements $t.\Delta b$ which extend over the surface of the entire surface depth (where t is the surface depth at the particular moment and Δb an element of the span b of the separate coherent water supporting surface,) are a greater distance from the bows of the floating body in comparison with the neighbouring surface element of the water supporting surface in question adjoining them at the particular moment, the deeper they are placed in comparison therewith.

When the water supporting surface according to the present invention rises more and more out of the water, the resultant of the hydrodynamic buoyancy forces of those parts of the supporting surfaces which are in the watet moves towards the rear that is to say in the direction from the bows to the stern of the boat. A particular advantage of the water supporting surface according to the present invention consists also in the fact that even a single such water supporting surface suffices without the use of stabilising surfaces of any other kind for the purpose of ensuring longitudinal stability about the transverse axis through the centre of gravity of the boat. This measure is not possible in any of the water supporting surfaces hitherto known. In all of them at least two either similar or even dissimilar water supporting surfaces are needed longitudinally of the boat. When a single water supporting surface according to the present inveniton is used it is also possible to vary the height of the hull of the boat above the surface of the water by shifting the centre of gravity of the boat horizontally, and by special means if need be, which may be of advantage for the purpose of obtaining a favorable angle of incidence. Any one of the well known transversely stable water supporting surfaces may be taken as a pattern for the construction of the water supporting surface according to this invention as regards its transverse stability, that is to say the stability about the longitudinal axis through the centre of gravity of the boat.

The present invention also provides an arrangement of a plurality of water supporting surfaces according to this invention whereby variation of the angle of incidence with varying speed of the boat takes place in a manner similar to that when a single water supporting surface according to the present invention is used, but in this case variation of the position of the centre of gravity of the boat has not by any means such a great influence on the height of the hull of the boat above the water.

The invention also comprises the use of one or a plurality of water supporting surfaces according to the present invention in combination with one or a number of such water supporting surfaces (known per se) the size of the surface of which remains the same at positions different height of the hull of the boat above the surface of the water. By the cooperation of these two dissimilar forms of water supporting surface it is possible to impart to the water supporting surface of constant area arranged behind the centre of gravity a slightly negative buoyancy, that is to say a repellent action and yet guarantee the automatic adjustment of the angle of incidence of the water supporting surfaces above mentioned. With the help of these supporting surfaces giving a slight repellant action and the attachment strut of which may be used for steering the craft a particularly good transverse stability can be obtained particularly when negotiating bends.

The invention is illustrated by way of example and diagrammatically in the accompanying drawing in which

Figure 1 is a side elevation of the hull of a boat with a water supporting surface according to the present invention.

Figure 2 is a plan of the hull of the boat.

Figure 3 is a front elevation of Figure 1.

Figure 4 is a side elevation of a further constructional form, the movement of the floating body being from left to right.

Figure 5 is a plan of Figure 4, and

Figure 6 a front elevation thereof.

Figures 7, 8 and 9 are views similar to Figures 4, 5 and 6 of a further example.

Figure 10 is a side elevation of a water supporting surface according to the present invention with an arrow-shaped horizontal part, movement from left to right.

Figure 11 is a plan of Figure 10, and

Figure 12 a front elevation thereof.

Figure 13 is a side elevation of a boat in motion with a water supporting surface according to the present invention arranged both in front of and behind the centre of gravity.

Figure 14 is a side elevation of a floating body in motion with a water supporting surface according to the present invention and a water supporting surface of a kind the surface of which remains the same even at different heights of the floating body above the water.

Figure 15 is a transverse section on the line X—X of Figure 14 for the special case in which the supporting surface shown produces a repellant action and the floating body is rotated about its longitudinal axis.

Figure 16 is a side elevation corresponding to Figure 1, in which however the water supporting body has vertical attached pieces.

To the hull B of the board shown in Figures 1 to 3 is attached a water supporting surface w. This supporting surface is of such a shape that each surface element, the element $t.\Delta b$ for example, is at a greater distance from the bows of the boat that its adjoining neighbouring element when it lies lower than its neighbouring element. When the boat is in motion and if the position of the surface of the water be represented by the line m—m, the supporting surface elements which are in the water produce hydrodynamic buoyancy forces of which let A be the resultant. If the hull of the boat has been lifted higher out of the water, the surface of the water will be situated in the position n—n, and the resultant of the hydrodynamic buoyancy forces will be moved rearwards to approximately A′.

If the position of the centre of gravity of the boat be denoted by S, the boat, taking into account only the forces of gravity and buoyancy, will be in equilibrium when the surface of the water is in the position represented by m—m, as it has been assumed that for this position the resulting buoyancy force occupies the position denoted by A.

If now the speed of the boat increases, the water supporting surface rises by a certain amount out of the water, while the resulting hydrodynamic buoyancy force moves slightly to the rear behind the centre of gravity S and consequently produces a moment which lowers the bows of the water craft and therefore reduces the angle of incidence of the supporting

surface. In this way a reduction of the angle of incidence is always produced automatically without assistance means of any kind when the speed increases and this reduction of the angle of incidence is of such a nature that the buoyancy remains the same and the position *m—m* for the surface of the water is retained. In this case the bows would be forced slightly too much downwards by the moment which arises and consequently the angle of adjustment of the water supporting surface would be too small, with the result that a larger supporting surface would be needed and therefore the supporting surface would sink lower in the water than is represented by the line *m—m*. In consequence however the resulting buoyancy force would be shifted to the right from the centre of gravity S in Figure 1 or in other words would produce a moment which lifts the bows and thereby again increases the angle of incidence to an amount which corresponds to the speed and the position of the surface of the water.

As will be seen from what has been said and from Figures 1 and 2, the height of the hull of the boat above the surface of the water depends on the position of the centre of gravity S. If S be shifted away from the bows to the stern, that is to say rearwards, the hull of the boat will lift itself higher above the surface of the water and will do so even when the speed remains constant, and certainly with an increase in the angle of incidence that is to the inclination of the boat to the horizontal. If on the other hand the speed of the boat remains constant and the centre of gravity be shifted nearer to the bows, the supporting surface will sink lower in the water and the angle of incidence of the water supporting surface will be simultaneously reduced. As the so-called sliding number, that is to say the ratio of resistance to upward thrust depends primarily on the angle of incidence, the centre of gravity can be adjusted by suitably shifting it to that angle of incidence for which the sliding number is most favorable, that is the smallest.

Even a single water supporting surface as shown in Figure 1 ensures longitudinal stability, that is to say stability against rotation about the transverse axis passing through the centre of gravity S. In such case if when a boat is in motion and the speed is constant the bows of the hull of the boat were brought by an external force into slightly downwardly depressed position, the angle of incidence would simultaneously have been reduced. This however would cause the upward thrust to be lessened and the water supporting surface would in consequence sink lower still into the water. In the water supporting surface according to the present invention however the shifting of the resultant buoyancy force towards the bows that is to say towards the right of the centre of gravity S in Figure 1 is connected necessarily with a drop in the water of the supporting surface and consequently the production of a moment which tends to lift the bows again and this lasts until the boat has again acquired its position of equilibrium. The assumption that the boat when in motion is out of its position of equilibrium by an external force in a counter-clockwise direction about its transverse axis leads by an analogous consideration likewise to the discovery that even a single water supporting surface according to this invention guarantees stability.

In order to obtain the necessary stability against rotation about the longitudinal axis passing through the centre of gravity any one of the well known transversely stable water supporting surfaces or arrangements of water supporting surface may be taken as a pattern. In this respect Figure 3 shows merely an example.

Figures 4 to 6 show a different constructional form of the water supporting surface according to this invention in which certainly as regards the height of the single floating body above the surface of the water only a limited transverse stability exists. When such floating bodies are used in pairs alongside each other great transverse stability can be obtained.

In Figures 7 to 9 is shown a further constructional form which is specially characterised by the fact that, notwithstanding transverse stability, the immersed part of the water supporting surface need only be very small when the hull of the boat is lifted high. The solution shown in Figure 9 for obtaining transverse stability consists of an inversion of a well known form of water supporting surface.

For reasons of strength it may be necessary to use one or more struts, or in Figure 3 for example the keel might be carried down to the lower part of the water supporting surface *w* instead of the strut *s* shown there.

In order to still further increase the effect of the water supporting surface according to the present invention in respect of longitudinal stability, and of the automatic adjustment of the angle of incidence when the speed varies, it may be advantageous to use so-called constant pressure centre profiles for the water supporting surface that is to say symmetrical profiles. This effect can be increased still further beyond this by giving to the lower part of the water supporting surface according to this invention which always remains in the water, an arrow-like disposition with a buoyancy number which decreases outwards. Such a form of water supporting surface according to the present invention is shown in Figures 10 to 12. In these figures the decrease in the buoyancy number outwards for the lower part *b* of the water supporting surface according to this invention which in this case is constructed horizontally, is obtained by making the angle of incidence decrease outwards while yet using the same supporting surface profile, that is to say in Figures 11 and 12 the angle of incidence is greater at the points C than at the points D. In Figures 10 to 12 *s* denotes a strut which in many cases may be necessary for reasons of strength. It may also be necessary to construct the upwardly directed parts of the water supporting surface of the present invention in such a way that the size of the surface or of the angle of incidence or even of both increases upwards.

Figure 13 shows an arrangement of several (two in this case) water supporting surfaces w_1 and w_2 according to the present invention in which one surface lies in front of and the other one behind the centre of gravity S. The arrangement shown in Figure 13 according to which for the working speed of the boat the distance of the two supporting surfaces w_1 and w_2 from the centre of gravity S is the same namely d_1 and d_2 respectively is only intended to be an example of the different arrangements which are possible. The distances of the water supporting surfaces from the centre of gravity do not need by any means to be the same. In like manner the supporting surfaces according to this invention which are attached to the hull of the boat may also them-

selves be different from each other both in size and also in shape and in respect of the angle of incidence. In the water supporting surface according to the present invention all parts thereof need not necessarily be so constructed that their surface elements are the more distant from the bows the lower they are placed but only the parts of the supporting surfaces which cut through the surface of the water at the working speeds. In particular this need not necessarily be the case in the upper parts of the water supporting surfaces as is shown by way of example in Figure 16. Instead of vertical parts w' other connecting pieces suitable to the purpose may be used.

The front view of the water supporting surfaces shown in Figure 13 may for example be similar to the one shown in Figure 3. In large boats stiffening struts s are generally used, which in this case can again be either wholly or partially replaced by taking the keel of the hull down to the central part of the water supporting surface in a manner suitable to the purpose.

In Figure 13 therefore a special example is shown according to which d_1 is equal to d_2 and therefore also A_1 equal to A_2, while in addition to this the sum of A_1 and A_2 is equal to the weight of the whole boat. As forces which arise only the forces of gravity and buoyancy have been taken into consideration as hitherto, while the forces of resistance and thrust have not been considered, so as to make the investigation of the stability and the automatic adjustment of the angle of incidence simpler. In order to justify this the assumption may be made for example that the thrust is equal and opposite to the resistance and that the direction of thrust coincides with the line of resistance. If the speed of the boat gradually increases, the hull of the boat will be lifted higher out of the water with the result that d_2 will be greater but d_1 smaller at the same time. A resulting moment is therefore set up which depresses the bows of the boat slightly, whereby the angle of incidence of both water supporting surfaces is reduced, which is just what is desired, owing to the increase in the speed. By this inclination of the boat however the front water supporting surface dips more deeply into the water than the rear water supporting surface does, so that consequently the effective surface of w_1 will be greater than that of w_2. In the assumed increase in the speed such a height and inclination of the boat then automatically sets in that the moment of the buoyancy force produced by the front greater supporting surface multiplied by the front smaller lever arm, is opposite and equal to the moment produced by the rear smaller supporting surface, multiplied by the rear larger lever arm. For an assumed decrease in the speed it can be shown by a similar consideration that in this case also an automatic adjustment (but now with an increase in the angle of incidence) results.

When a number of water supporting surfaces are used of which Figure 15 shows an example, the shifting of the centre of gravity is not of the same importance as regards the height of the hull of the boat above the surface of the water as it is when only one water supporting surface according to this invention is used, see Figure 1. In many cases and in particular when there are many passengers in the boat who want to move about in it, this circumstance may be of advantage. For example if the centre of gravity S in Figure 13 moves slightly towards the stern, the front lever arm d_1 will become greater and the rear lever arm s_2 smaller. This produces a resulting moment which lifts the bows. The result of this is however that the front water supporting surface w_1 is lifted further out of the water than the rear water supporting surface w_2 so that the front effective surface of w_1 is smaller than the effective surface of w_2. Moreover such a height and inclination of the boat set is again in this case also that the smaller buoyancy force (smaller because produced by the smaller effective surface w_1) multiplied by the larger lever arm d_1 is opposite and equal to the product of the greater buoyancy force produced by the greater effective surface w_2 and the smaller lever arm d_2. A similar consideration also permits the centre of gravity S being shifted towards the bows of the boat.

Figure 14 shows a floating body with a water supporting surface w according to the present invention and also with a water supporting body q (known per se). The supporting surface q is situated entirely below the surface of the water and is attached by the strut r, which may also be utilised simultaneously as a steering rudder, to the floating body B. The important feature of the supporting surface q is that its effective surface remains of the same size when the height of the floating body above the surface of the water changes, in contradistinction to the supporting surface w according to the present invention. In Figure 14 is shown the special case in which for the working speed the resulting buoyancy force A_1 of the water supporting surface w according to this invention lies close behind the centre of gravity S of the boat. For reasons of equilibrium it is necessary therefore that the buoyancy force produced by the water supporting surface q shall be negative, that is to say A_2 must be repellant. It is not necessary however for this arrangement to be chosen. In some cases it is advantageous to so select the angle of incidence that a positive upthrust is produced. In such case the water supporting surface w according to this invention must be arranged nearer to the bows of the boat. The special advantage which results from the cooperation of the two different kinds of water supporting surfaces w and q, lies in the great longitudinal stability which is obtainable and also in the automatic adjustment of the angle of incidence within a very wide range of different speeds, combined with the possibility of enabling negative buoyancy forces to be also obtained with the water supporting surface q:

If it be assumed for example that the speed of the floating body shown in Figure 14 becomes smaller, the two water supporting surfaces w and q sink lower in the water. Now although it is true that the effective surface of w becomes somewhat greater, the comparatively great decrease of the lever arm d_1 (which is small per se) nevertheless preponderates in the effect produced so that the moment of the buoyancy force A_1, multiplied by the lever arm d_1 (the percentage of which has become greatly curtailed) becomes smaller than the moment of the buoyancy force A_2, multiplied by the lever arm d_2 which remains of the same size. The moment which results from those two moments therefore effects an automatic adjustment of the floating body, that is to say an increase in the angle of incidence in accordance with the reduction in the speed. A similar consideration can be carried out for the assumption of an increase in the speed.

In the case also in which the supporting surface *w* as well as the supporting surface *q* produce positive buoyancy forces, it can easily be shown by a similar consideration that an automatic adjustment of the angle of incidence always takes place when the speed changes. In this case the centre of gravity lies between the lines of action of the two buoyancy forces A_1 and A_2.

On some occasions it may be of advantage to so arrange the water supporting surface according to the present invention that at moderate speeds positive buoyancy values are produced by the supporting surface *q* and that as the speed increases, that is to say the angle of incidence decreases, these buoyancy values then decrease to zero, and finally become negative again as the speed increases still further.

If the water supporting surface *q* produces a negative buoyancy at the stern of the floating body, that is to say a repellant action, this circumstance may be of special advantage for the initiation of a curve and for keeping the floating body in the curve. If the floating body is to describe a curve to starboard it will in general lay itself in the curve that is to say to starboard, so as to be able to absorb the centrifugal force exerted on the floating body. For this position of the floating body a section along the line X—X looking in the direction from stern to bows of Figure 14 is shown in Figure 15. The repellant force A_2 is inserted in Figure 15 and shifted in its line of action up to the longitudinal axis E through the centre of gravity of the boat. If the force A_2 be divided into two components at right angles to each other, one component being directed at right angles to the surface of the water, the result will be that the other component tends to force the stern towards the larboard side and thus acts in the right way like a steering rudder so to speak or assists the already existing steering rudder in its action. Although this horizontal component will not be very great in most cases, the moment which is produced may nevertheless be considerable, as the lever arm d_2 can be made correspondingly great.

To enable the floating body to be drawn up on land or for other reasons it may be desirable to attach the water supporting surface *w* and also the water supporting surface *q* to the floating body in such a way that they can be rotated about certain axes P_1 and P_2 respectively. In this case it is advantageous to so construct the strut *s* of the water supporting surface *w* that the front and rear edges of the strut form substantially arcs of circles with the axis P_1 as the centre. This makes it possible to do with as small an opening in the keel of the floating body as possible when the supporting surface according to the present invention is swung upwards.

In these circumstances it is found to be particularly favorable to place the lowermost part of the water supporting surface according to the present invention rearwards from the point of rotation so that the strut can be constructed in the manner described and at the same time stands nearly vertical so that it can effectively transmit buoyancy forces to the floating body.

Instead of the water supporting surface *q* being placed behind the water supporting surface *w* as shown in Figure 14, the supporting surface *q* can, taking the well known condition for longitudinal stability into consideration, be also placed in front of the supporting surface *w* approximately in the vicinity of the bow.

OSKAR TIETJENS.

PUBLISHED

MAY 11, 1943.

BY A. P. C.

O. TIETJENS
SELF STABILISING BOATS OR
OTHER FLOATING BODIES
Filed April 17, 1939

Serial No.
268,421

2 Sheets-Sheet 1

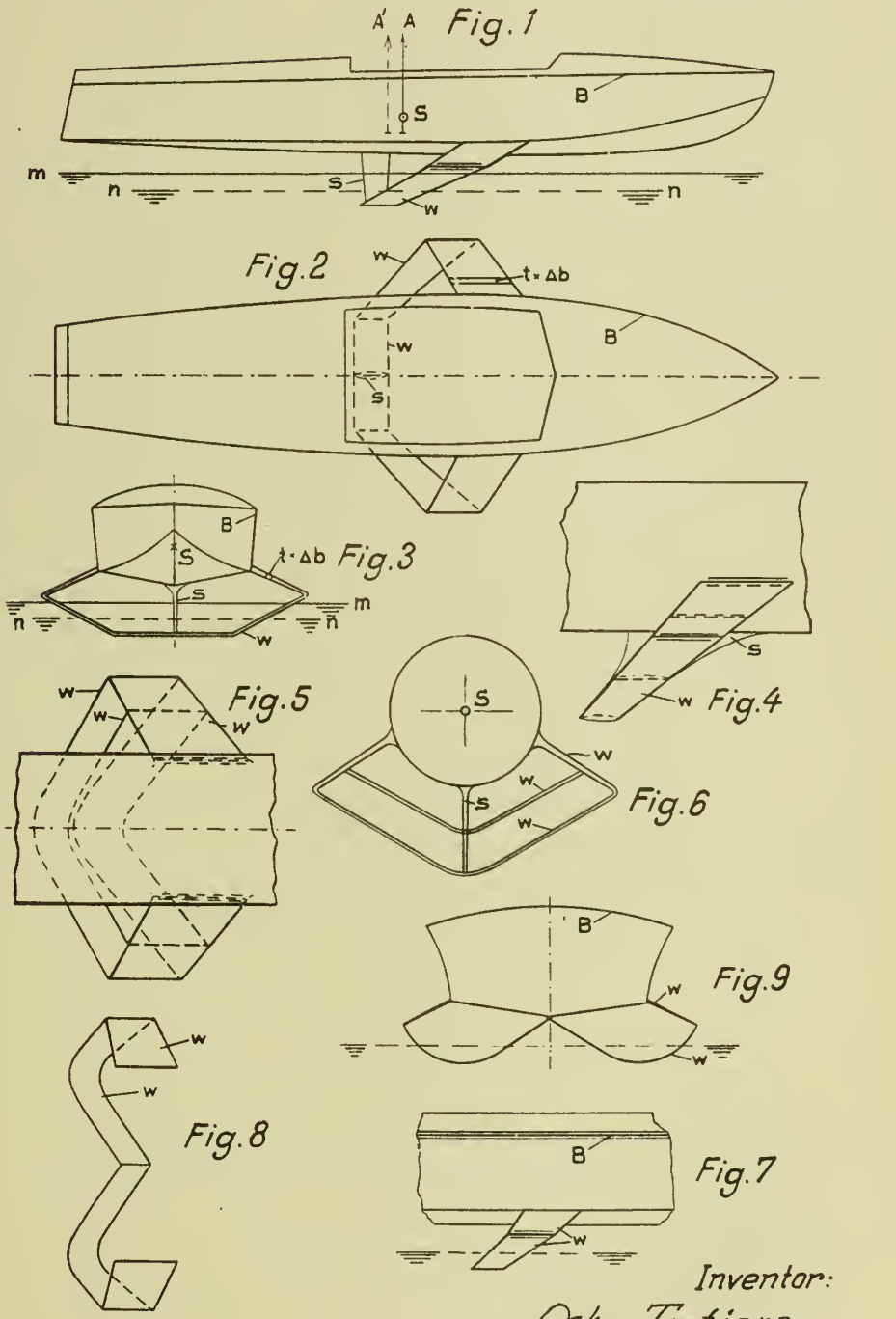

Inventor:
Oskar Tietjens
by his attorneys
Howson and Howson

PUBLISHED

MAY 11, 1943.

BY A. P. C.

O. TIETJENS
SELF STABILISING BOATS OR
OTHER FLOATING BODIES
Filed April 17, 1939

Serial No.
268,421

2 Sheets-Sheet 2

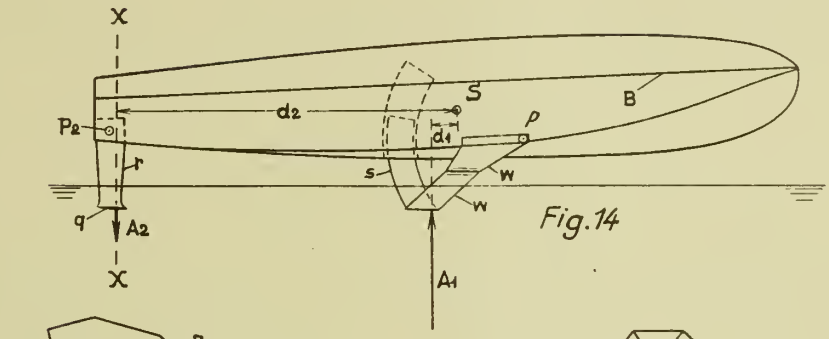

Fig.14

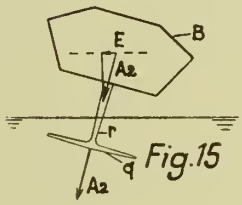

Fig.15

Fig.10

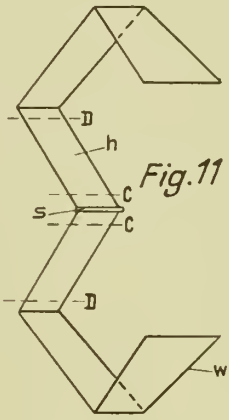

Fig.11

Fig.12

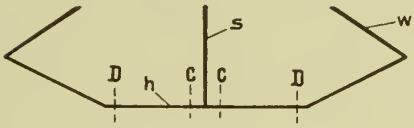

Fig.13

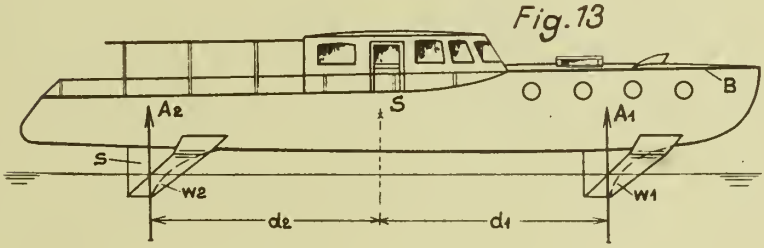

Fig.16

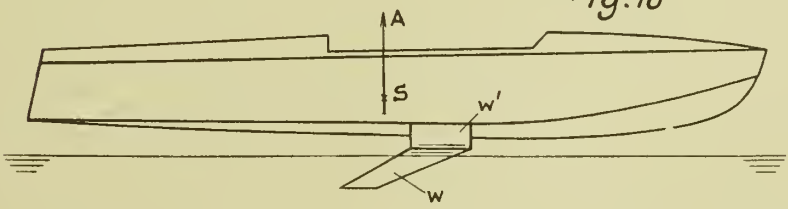

Inventor:
Oskar Tietjens
by his attorneys
Howson and Howson

Published May 11, 1943

Serial No. 268,830

ALIEN PROPERTY CUSTODIAN

BENDING ROLLERS FOR BAR OR ROD IRON BENDERS OR THE LIKE

Anton Wagenbach, Wuppertal-Elberfeld, Germany; vested in the Alien Property Custodian

Application filed April 19, 1939

This invention relates to bending rollers for bar or rod iron benders or the like.

When bending reinforcing iron for concrete structures or even similar rolled bars or rods in spite of the usual limitation to a smallest diameter of the bend of five times the diameter of the rod, squeezing of the cross section of the rod and frequently also breaks in the bent hook frequently occur.

The invention consists in that the bending roller has a circumferential groove which must suitably be constructed shallower or deeper depending on the hardness of the iron to be bent with a transverse diameter corresponding to the diameter of the iron to be bent, with at the same time an addition to allow for inaccuracies. This construction gives a considerable improvement to the bending in so far as the bent iron acquires less hardness and decreases in expansion, that is, experiences less undesired alteration in condition than it does during the usual bending on flat rollers. This is due to the fact that the surface pressure between the iron and the bending roller is reduced and thus the disturbance of the condition is correspondingly reduced. The breaking of hooks is thus considerably restricted.

A further fundamental improvement results if the groove of the roller is so widened at the base that it allows the iron to move freely there. By this means instead of one surface contact central point a pair of such central points is given on the side parts of the iron and by this means the whole surface pressure is distributed so favourably with the complete freeing of the otherwise most strongly strained innermost curved portion that an absolute security against breaking of the hook or only against burdensome alterations in the condition of the metal is obtained. This is to be explained in that just those portions of the metal which are otherwise most strongly compressed and at the same time pressed by the roller pressure, which were otherwise squeezed out in parts and gave rise to groove cracks, now by being kept free from stresses no longer lead to any dangerous grooved parts.

A further improvement results if the roller groove does not have a simple straight line cross section but has a curved cross section adapted to the diameter of the iron. By this means the contact surface between the roller and the iron is increased to the advantage of the further prevention of damage to the condition of the iron. A favourable form of the adaptation leads to a partial egg cross section of the groove which then has a completely continuous course of the outline of the cross section between the slightly curved iron gripping portion and the strongly curved base portion of the groove so that even in the case of any inaccuracies in the measurements of the iron the iron can simply sink into the groove to a different depth without however experiencing anywhere any other than good clinging contact.

For the distancing apart of the places of contact relatively to the diameter of the iron a groove with an angle of approximately 120° between the cross section lines touching the iron at a tangent has shown itself particularly advantageous whether these are straight or curved in the manner stated in order to cling to the iron. The angle of about 60° at the centre in the iron thus formed between the two places of contact has proved itself favourable on the one hand in that the places of contact are sufficiently distanced from the most strongly compressed part of the rod and on the other hand in that they have not such a pronounced wedge-like inclination to one another that they would lead to an undue wedging in of the iron and a corresponding increase in the stresses of the curved parts.

The figures in the drawing illustrate diagrammatically the invention in a series of examples of embodiment of the structure of sections of the rims of the bending rollers with indicated cross sections of the iron to be bent.

According to Fig. 1 the bending roller has a shallow circumferential groove **1**, the radius of the cross-section of which is 0.5 mm. greater than that of the iron to be bent. By this means the iron runs reliably in the roller even with slight variations in its thickness, and the increased surface of contact gives rise to the preservation of the iron in the manner stated.

According to Fig. 2 the roller has two tangential surfaces which open into an intermediate base surface **3** in such a way that the iron to be bent remains free from the base surface and is thus only engaged at the tangential contact points. The angle of the tangential surfaces **2** to one another amounts to 120°, so that the angle at the centre of the radii drawn from the centre of the iron to them as illustrated amounts to 60°.

According to Fig. 3, two groove parts **4** which are given a slight increase in diameter over the diameter of the iron, are separated from a base groove portion **5**. Here while retaining the angle at the centre of about 60° for the main carrying radius the contacting surfaces are fitted to one another to favour a further diminishing of the surface pressure.

According to Fig. 4 the contact surfaces **6** are

curved as in the preceding case, but they are carried out here together with the base groove 7 altogether as an ellipse shaped line so that the corners present in the previous construction between the side and the inner circumferential parts are entirely removed here and a constant groove outline is obtained throughout.

As bending roller is to be understood throughout not only the one roller round which the rod is bent, but the counter pressure and pressure rollers, which cooperate in the bending may likewise have the new construction.

Bending rollers with a plurality of grooves are suitably constructed with a total width of groove equal to the thickness of the iron to be bent so that a lot of thin irons laid next to one another may be bent at the same time.

ANTON WAGENBACH.

PUBLISHED

MAY 11, 1943.

BY A. P. C.

A. WAGENBACH

BENDING ROLLERS FOR BAR OR ROD IRON BENDERS OR THE LIKE

Filed April 19, 1939

Serial No. 268,830

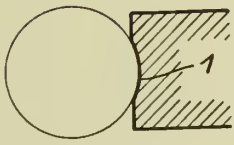

Fig. 1

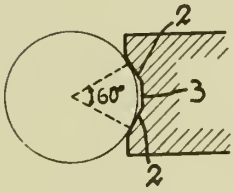

Fig. 2

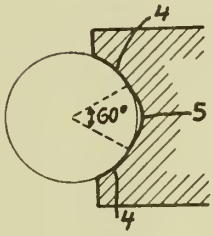

Fig. 3

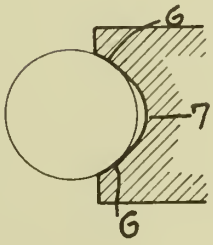

Fig. 4

Inventor
Anton Wagenbach
By B. Singer
Attorney

Published May 11, 1943

Serial No. 269,236

ALIEN PROPERTY CUSTODIAN

CERAMIC GOODS

Emil Klingler, Korntal, Curt Schönherr, Stuttgart-Feuerbach, Heinz Schmidt, Stuttgart-Zuffenhausen, and Friedrich Gantzhorn, Stuttgart, Germany; vested in the Alien Property Custodian

No Drawing. Application filed April 21, 1939

Ceramic goods are known which consist principally of alumina. Usually binding or fluxing agents are added as a flux to the alumina; however, it has also been used without any addition. The alumina is in this case preferably anhydrous and can be obtained according to known processes from bauxite.

The goods prepared in this way have, however, the disadvantage that on account of the high heat expansion of alumina, they are sensitive towards high rapidly altering temperatures.

According to the invention, ceramic goods stable towards high temperature changes are obtained by submitting pure anhydrous alumina to a second melting up process in an electric arc furnace at temperatures above 2000° C. By the second melting up, it is ensured that the purest anhydrous alumina with an Al_2O_3 content of 99.2% to 99.9% is probably freed from substances which appear to exert an unfavourable influence on the stability towards temperature change. Preferably for the manufacture of such a base material, precautions known in themselves are used if the best results are to be attained. The process is more fully described in the following:

The alumina only once melted, hitherto regarded as pure which is already used in this form for the manufacture of refractory goods, without any fluxes is once again completely melted up at temperatures above 2000° C in the electric furnace and then chilled. Thereby it is ensured first, that the subsequent comminution by breaking and grinding is made considerably easier. Thus it is possible to diminish the wearing of the grinding unit very considerably, and above all to avoid the contamination of the corundum which principally consists of finely divided iron particles, so far as it is technically possible. This is especially advantageous because it was known that the very finely divided iron powder reacts with the strongly hygroscopic ground corundum in such a manner that the absorbed water oxidises the metallic iron. These iron oxides are particularly disadvantageous because they cannot be completely removed either mechanically by a magnet or chemically, e. g. by acid treatment. It has now been found however, that they can be converted into such a form under the influence of agents giving off nascent hydrogen, that they are easy or easier to remove by the subsequent acid treatment.

Moreover, it has further been found that it is undesirable in certain conditions to remove wholly or in part, the metallic iron contained in the finely divided condition in the ground corundum, because this iron can be employed for hydrogen evolution, if use is not made of other agents, or together with these. From this point of view, the use of grinding units of soft iron is recommended in certain cases for the chilled mass, which was completely excluded hitherto, since they would give up too much iron to the ground corundum if the corundum is only once melted and not chilled.

It has been found that under certain conditions, a purer product can be obtained in the end from grinding units made of soft iron, than by the use of ground grinding units made of iron which is not so soft. The end product obtained after the acid treatment with or without intermediate heating in hydrogen has less than 0.05% iron.

The doubly melted corundum from which iron has been removed forms a valuable product, of which the ceramic qualities excel by far that of the hitherto used very pure alumina. Thus it has for example been found that in batches with zeolitic or permutitic fluxes it has as a consequence a considerably lower burning temperature than, e. g. the corresponding pure alumina and that the ceramic bodies produced are unexpectedly dense and hard. The ceramic goods are however above all specially resistant against abrupt temperature change irrespective of the fact that also a higher hitherto not obtainable mechanical solidity and especially good heat conductivity is obtained. The specially valuable properties of the doubly melted corundum being about naturally an economical use of the same in such proportions that on the one hand the object is attained and established, on the other hand, however, no waste of the raw material occurs.

It has further been found that it is possible to add up to 20% of very pure alumina to the doubly melted corundum, without the favourable properties being affected in any way. Such an addition can however, only be used without a diminution of the good properties if the proportion of the doubly melted corundum in the mass is not smaller than 65%.

It has been proposed with the hitherto known masses for ceramic bodies to use sintering media with a ziolitic or permutitic character. Such sintering substances can also be advantageously used with doubly melted corundum, as already mentioned.

It has however, further been found that these substances otherwise regarded as irreplaceable in the sintering of singly melted corundum can be replaced wholly or in part, without diminution of

the high stability to temperature change stability can be replaced either wholly or in part by a mixture of raw and burnt clay or kaolin together with alkaline earth oxides and a small proportion of silicic acid. This result is surprising and is probably to be explained by the fact that a corundum melted a second time at temperatures over 2000° C. appears to have become considerably more reactive.

The mixture of corundum and flux components, quite independently of the nature of the latter is preferably brought about in drum mills. It renders the uniform admixture more easiy if it is carried out dry. It has also been found that drum mills with highly elastic soft rubber casings in which the grinding bodies submit to mixing the mass burnt above 1500° C. are specially advantageous. By the rubber casing impurities in the mixture are excluded, independently of which the working life of the drum mills is considerably increased.

In the following are given two examples of carrying out the invention:

	Parts by weight
(1)	
Doubly melted corundum	75
Raw clay	Up to 11
Burnt clay	Up to 6
Very pure ground quartz	Up to 3
Alkaline earth oxide	Up to 5
Total mixture	100

Burning temperature under 1650° C.

	Parts by weight
(2)	
Doubly melted corundum	75
Raw clay	Up to 17
Very pure ground quartz	Up to 3
Alkaline earth oxide	Up to 5
Total weight	100

Burning temperature under 1650° C.

It is moreover already known to make short masses, e. g. those from sillimanite or aluminium oxide or common corundum so that they can be pressed in the moist state by giving them an addition of raw clay or kaolin of at least 20–30%.

With the masses according to the invention, is already obtained a good capacity for being pressed, and moulded even by an addition of less than 4% of raw kaolin, and a simultaneous water addition of at least 7.5% and at highest 10.5%. This is in fact chiefly to be attributed to the doubly melted corundum of which the ability to be pressed is increased as compared with singly melted corundum. Moreover, it must hereby be observed that the water addition small in itself, is evenly distributed in the mass itself, and the latter must be made as plastic as possible by fermenting in cooled spaces. It is likely that actually by this fermenting not only a sufficient wetting of the lean components such as the dusty ground corundum and the flux components, but also a thorough going uniformity of water distribution were obtained.

Such a mass can then also be pressed to give sufficiently solid bodies and even turned.

It is further also known to prepare bodies from short ceramic masses without fluxes by casting, mixtures with organic binding agents such as sulphite liquor, dextrin, agar-agar, gum arabic etc. to pug them, to harden them and to form them by turning. Moreover, a projection moulding process has been proposed which is specially economical for masses which consist of aluminium oxide, fused corundum, or preferably of fused corundum and a flux.

The masses forming the basis of the present invention which consist of doubly melted corundum can also in a manner known in itself be made capable of injection moulding by means of organic binding agents. They are then moulded by an injection process known in itself and burnt at temperatures under 1650° C. A pre-condition for injection moulding, however, is that they contain a proportion of raw clay or kaolin which lies under 10%. This is very advantageous since the injection moulded bodies become dense at lower burning temperatures than if they were prepared by wet moulding. Thus the content of raw clay or kaolin in the flux can be diminished to a considerable extent and if necessary the flux can be wholly or partly replaced by raw clay or kaolin.

In the hitherto known injection mouldable ceramic goods, their preparation is started from a predominant main component with which the so-called flux is mixed, whereupon the mixture is made capable of injection moulding in a known manner by admixture of organic binding agents.

It has been found that with the ceramic masses according to the invention, the main component and the flux can be melted together in an electric arc furnace without any further trouble. As previously, the melted product is then chilled and ground very finely. This ground mass can be made capable of injection moulding by addition of organic binding agents and the goods prepared therewith burnt at temperatures under 1650° C. to give dense products. In this manner it is ensured that the same components, which otherwise are first present in the hard burning of the ceramic goods, are already produced by melting in the electric arc furnace. It has been found that in the melt, molten corundum, aluminium silicate in the form of sillimanite or mullite and alkaline earth-aluminium-silicates are formed together and, on solidification, crystallise out. It is economically specially advantageous to operate in this manner, since a subsequent intimate mixing of doubly molten corundum and flux is no longer necessary. The new spraying process thus requires less consumption of time than the process hitherto used. It has moreover, been found that by the melting together of the corundum with the flux the proportion of the latter can be kept smaller although the goods thereby produced sinter below 1650° C. to dense products. This is apparently to be attributed to the fact that by the melting together the softening temperature or the sintering range of the mass is considerably lowered.

In the following a further example of carrying out the modification of the invention is given.

	Per cent by weight
Purest anhydrous alumina or corundum	75
Kaolin	Up to 17
Ground quartz	Up to 3
Alkaline earth oxide	Up to 5
	100

are all melted in an electric arc furnace, chilled and ground as finely as possible, preferably iron is removed according to the process already described, and the mass is made capable of injection moulding by means of organic binding

agents. Instead of raw or burnt slag and ground quartz can also be added, only ground quartz and alkaline earth oxide, and in fact in the same ratio as is necessary for the formation of corresponding amounts of aluminium silicate and alkaline earth-aluminium silicate in the molten liquid.

It has not been hitherto possible completely to burn and simultaneously to glaze the ceramic masses composed of corundum and flux in one burning. The strongly basic action of the material which consists predominantly of corundum which first strongly comes into question at burning temperatures of 1500–1650° C. makes any glazing impossible because even the material at this high temperature eagerly reacts with the acid components of the melted mass. It sucks the glaze up and thereby there is produced at its surface a rough matt covering layer and an intermediate layer. Both have however, different expansibilities than the ceramic body itself. By these different expansibilities strains are set up between the layers which may reach such an extent under certain conditions that by the occurrence of contraction, the relatively soft ceramic bodies may be destroyed in the finishing burn. It has been found that on the ceramic bodies according to the invention, by the use of a material which consists predominantly of felspar and which preferably is prepared so as to be capable of sprinkling, a glaze layer can be obtained at the finishing burn.

The bodies can be sprinkled with the blaze both in the raw as also in the incandescent condition, dipped or painted, or in any other known way provided therewith. The glaze or molten mass according to the invention reacts only little with the strongly basic bodies on account of its high proportion of alkali and forms a smooth and polished coating on the surface of the latter. It is however useless to provide by a suitable burning that the alkali content does not evaporate too far since when this exceeds a lower value the bodies then become useless on account of bubble formation on account of the destruction of the pot.

The felspar glaze can preferably be added to very finely ground alumina or molten corundum or a mixture of the two. Thereby the pure felspar glaze is stabilised and made specially heat stable. There is however obtained a certain equalisation of the shrinkage of the glaze to that of the pot. Preferably however, the proportion of these additions must singly or together not exceed 40%. Instead of such additions can however, also pure kaolin and/or pure quartz occur in the same proportions or proportions only slightly deviating therefrom.

Ceramic goods prepared according to the invention also have a high temperature change stability, with relatively good heat conductivity of approximately 0.01 (cal. cm.$^{-1}$.°C.$^{-1}$.sec.$^{-1}$) at 400° C.

There can thus be very advantageously manufactured from such masses, insulators for sparking plugs, for which as is known, amongst other properties, good heat conductivity is necessary.

It has been found that while maintaining high stability to temperature change, the heat conductivity of the products from corundum melted down together with the flux in the electric arc furnace, can be still further improved by keeping the proportion of flux between the limits 5–1.5% by weight with 95–98.5% by weight of very pure aluminium oxide. In this case it is, however, necessary that the melting down of the corundum with the proportion of flux, be brought about with small current output, for example with one phase current at a tension of 110 volts between electrodes, with at most 900 amp. It has been found that only under these conditions are molten cakes obtained which are capable of comminution afterwards. If however, it is melted with high current output, e. g. with 1,200–1,500 amps. at 110 volt electrode tension, then the product is so hard and dense that it can no longer or only with difficulty, be broken. After comminution and grinding of the molten product prepared according to the invention, the mass can be further worked up according to one of the known ways, and be burnt at 1750–1780° C.

The ceramic goods prepared according to this modification of the invention have a heat conductivity of 0.02–0.025 (cal. cm.$^{-1}$.°C.$^{-1}$.sec.$^{-1}$) at 400° C. with simultaneous higher stability to temperature change. The occurrence of these two properties increases the applicability of the ceramic mass according to the invention to insulators for spark plugs. It is generally known that in the hitherto used insulators in particular those of pure aluminium oxide or corundum the heat conductivity quickly falls with increase of heating. Over against this, the ceramic goods according to the invention, however, show a smaller falling off of heat conductivity with increase in temperature and almost equally high values at the temperature of use of about 550° C.

EMIL KLINGLER.
CURT SCHÖNHERR.
HEINZ SCHMIDT.
FRIEDRICH GANTZHORN.

Published May 11, 1943

Serial No. 269,395

ALIEN PROPERTY CUSTODIAN

JOINING PARTS MADE OF THERMOPLASTIC MATERIAL

Alfred Henning, Leuna (Kreis Merseburg), Germany; vested in the Alien Property Custodian

Application filed April 22, 1939

Structural parts consisting of thermoplastic materials, for instance pipes, bars, plates and the like made from polyvinyl compounds, including polyacryl compounds and mixed polymerisates have hitherto been joined by screwing and/or cementing, if necessary by application of a hasp. In many cases screwing requires special measures for securing tightness. For cementing, solutions of similar plastic materials in volatile solvents are used as adhesives; in this case a considerable time is necessary for drying. There is not known a satisfactory butt-joint for these structural parts, such as is often desired for building purposes.

This invention is based on the observation that it is possible to produce an excellent joint of structural parts made from such plastic materials, by heating the parts at the places where they are to be joined until these places are at the melting point and then pressing the parts lightly together or spreading the material at the said places by slightly rubbing it, so that the heated ends of, for instance, the pipes flow into one another. It is still better to produce such a joint by using additional material having a constitution the same as that of the body to be joined, as in the case of autogenous or electric welding. For welding it is especially useful to give the additional material, for example, the form of a rod of solder, softening agents such as phthalic acid esters, triaryl phosphates and so on being added, if desired, to the plastic material in a proportion of 10 to 30 per cent. This additional material as well as the preferably chamfered edges of the parts to be joined are heated to the melting point whereby the materials flow into one another, an intimate unstrained connection being thus produced without application of pressure. The edges to be united are heated so rapidly that the effect of the heat penetrates only to a depth of some millimeters and without decomposing the plastic material. The softening agent added to the additional material evaporates to a large extent during the welding process, or distributes itself and penetrates into the heated edge of the weld. The joints made by this process possess to a high degree the same mechanical and chemical properties as those of the structural material, and the joints are ready for use immediately after cooling.

Heating can be effected by means of a flame or by means of other sources of heat, for example by means of a moderately heated soldering iron. It is preferable, however, to apply heat by means of a hot air jet blown over the edges to be joined and, if necessary over the additional material. In the accompanying drawing there are shown diagrammatic views of joints made by the process of the invention, connecting parts made of plastic material.

Fig. 1 represents two pipe-ends joined together,
Fig. 2 represents a welded socket joint,
Fig. 3 represents a tee-pipe with welded flange,
Fig. 4 represents two bars welded together.

This process is of special value for joining structural parts made of polyvinyl chloride; its application for joining pipes of this material, which is distinguished by its chemical and physical properties, is explained in the following example with reference to Fig. 1.

Two parts of a pipe made from polyvinyl chloride are chamfered slightly at the ends to be joined, as represented in Fig. 1. An air current is then blown on the ends brought into contact with each other and, at the same time, polyvinyl chloride heated up to the melting point is run into the notch thus formed; depending upon the purpose to be fulfilled by the pipe the process is performed without softening agent or with addition of for example 10 to 30 per cent. of tricresyl phosphate. The still ductile material is then spread by slightly rubbing if necessary by means of a suitable preheated device; after cooling, the joint has at least the same stability as the pipes themselves. This fact is the more astonishing, as according to the statements of literature polyvinyl chloride decomposes at its melting point (130° C.).

ALFRED HENNING.

PUBLISHED A. HENNING Serial No.

MAY 11, 1943. JOINING PARTS MADE OF THERMOPLASTIC MATERIAL 269,395

BY A. P. C. Filed April 22, 1939

Fig. 1

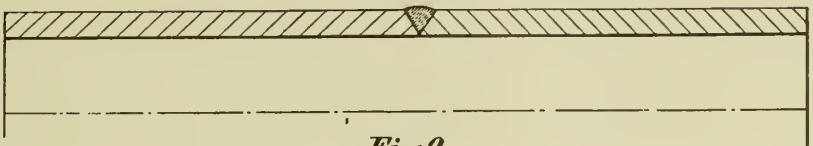

Fig. 2

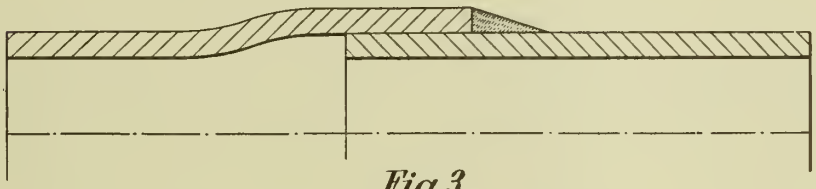

Fig. 3

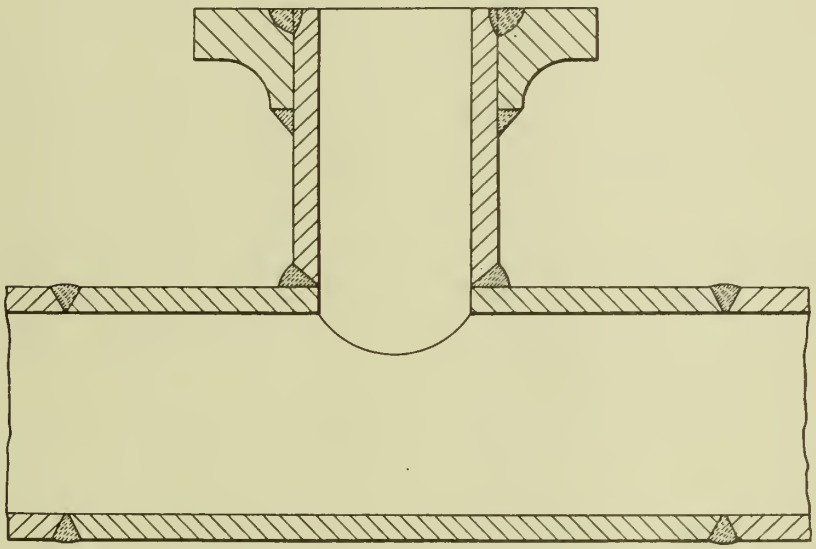

Fig. 4

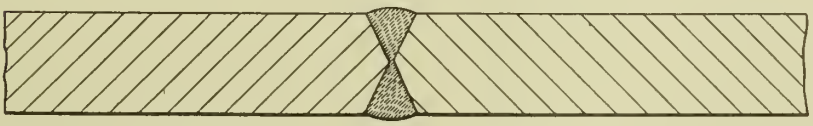

Inventor
Alfred Henning

By His Attorneys
Hurty and Joslin

Published May 11, 1943

Serial No. 270,210

ALIEN PROPERTY CUSTODIAN

ELECTRICAL CONNECTION AND METHOD OF MAKING SAME

Gilles Holst, Johannes Hoekstra, Jan Hendrik de Boer and Oswaldus Anthonius Jacobus van Lin, Eindhoven, Holland; vested in the Alien Property Custodian

Application filed April 26, 1939

Our invention relates to an electrical connec-
ion made by soft-soldering together a plurality
f electric conductors at least one of which has
n insulating covering, and to a method of mak-
ng such a connection.

The term "soft-soldering" as used herein and
n the claims is to be understood to mean sol-
ering at moderate temperatures, for instance
he temperatures occuring when soldering with
ead-thin mixtures.

In the usual methods of making an electrical
onnection between two insulated conductors, the
nsulating covering is removed from portions of
he conductors, and these bare portions, after
eing thoroughly cleaned, are soldered together.
uch methods are complicated and time con-
uming because of the necessity of removing the
nsulation and cleaning the conductor, and are
articularly difficult to carry into effect when it
desired to connect a conductor to an insulated
onductor which is so located in an electrical
pparatus that it is difficult to remove the in-
ulation and clean the same.

The main object of our invention is to over-
ome the above difficulties and to provide a sim-
le method of making a soft-soldered connection
etween a plurality of conductors of which at
east one is provided with an insulating cover-
ng.

A further object is to provide a method which
particularly adapted for connecting a con-
uctor to a second conductor which has an in-
ulating covering and is located in an inaccessi-
le place.

Further objects and advantages of our inven-
on will appear as the description progresses.

In accordance with the invention we make an
lectrical connection by soft-soldering together
onductors at least one of which has a coating
omprising an electrically-insulating organic
aterial which melts during the soft soldering,
ongeals during the subsequent cooling, and re-
ains in the vicinity of the connection prior and
ubsequent to the soldering operation. Thus we
o not remove the insulating coating or clean
he conductors, but merely place the conductors
ogether and carry out the soldering.

As parts of the mixture forming the coating,
e may employ organic substances of high
olecular weight such as cellulosic ethers or
ixed cellulosic esters; chlorinated rubber may
lso be used. This coating must have a melting
oint not exceeding the melting point of the soft
older used in making the connections and must
ot decompose appreciably at the melting point
of the soft solder. The material used for the coating may also comprise a substance which acts as a flux, such as dammar resin or colophonium, and particularly good results are obtained when such fluxes are used with the organic substances of the type mentioned above.

In order that the invention may be clearly understood and readily carried into effect, we shall describe the same in connection with the accompanying drawing in which:

Figure 1 is a sectionized side-view on an enlarged scale of a connection made between a bare conductor and a conductor having an insulating covering, and

Fig. 2 is a sectionized side-view on an enlarged scale of a connection made between two insulated conductors.

In Figure 1 a bare conductor **1** is joined by soft solder **3** to a second conductor **2** which is provided with an insulating coating **4** of the type described above. Prior to the soldering operation the coating **4** extended to the end of conductor **2**, but the portion in the vicinity of the connection melts during the soldering and subsequently assumes the position shown.

The conductor **2** may be a tinned copper wire provided with the coating **4** in the following manner. A lacquer is obtained by mixing 160 grams of benzol cellulose with 125 c. c. of ethyl alcohol and then adding 500 c. c. of benzol. To the solution so obtained 20 c. c. of tricresyl phosphate are added. The conductor **2** is then dipped several times into this solution with intermediate drying to produce the coating **4**.

Another suitable solution is obtained by dissolving 16 grams of cellulose aceto-butyrate in a mixture of 60 c. c. of benzol, 30 c. c. of acetone, and 20 c. c. of ethyl alcohol. To this solution is added 6 c. c. of a solution which is clarified by setting and which comprises 50 grams of dammar resin in 12.5 c. c. of toluol and 37.5 c. c. of ethyl alcohol.

A connection such as shown in Figure 1 is made in the following manner: The wires are placed together so that the coating on the end conductor **2** is in contact with the conductor **1**. The solder is then applied to the connection, for instance by a soldering iron, and the heat produced melts the coating **4** to allow the conductors to come in contact and to allow the solder to cover the ends of both conductors. After the soldering iron is removed, the joint cools and the coating material solidifies in approximately the position shown.

The connection shown in Figure 2 is the same

as that of Figure 1 except that the conductor 1 is provided with a coating 5 which is similar to coating 4, and is made in a similar manner.

Instead of using a coating of one material, it is also possible to use several coatings of different materials.

From the above it will appear that the present invention is particularly useful where a large number of connections must be made, for instance in radio sets, telephone apparatus and the like. In cases in which it is desired to solder conductors to a bare conductor located in some electric apparatus, the latter conductor may be provided with an insulating coating of the above type and the connections may be effected without removing portions of the coating.

We wish it to be understood that we do not desire to be limited to the exact details of construction and procedure described, because obvious modifications will occur to one skilled in the art.

GILLES HOLST.
JOHANNES HOEKSTRA.
JAN HENDRIK DE BOER.
OSWALDUS ANTHONIUS JACOBUS VAN LIN.

PUBLISHED

MAY 11, 1943.

BY A. P. C.

G. HOLST ET AL
ELECTRICAL CONNECTION AND METHOD
OF MAKING SAME
Filed April 26, 1939

Serial No.
270,210

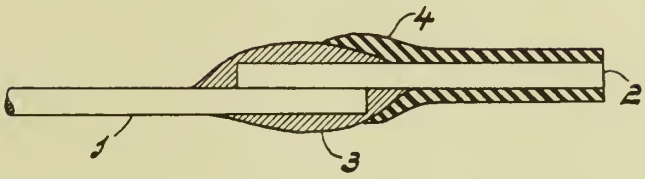

Fig. 1

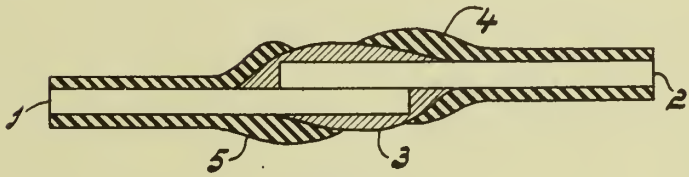

Fig. 2

INVENTORS
GILLES HOLST
JOHANNES HOEKSTRA
JAN HENDRIK DE BOER
OSWALDUS ANTHONIUS JACOBUS VANLIN
BY Lee B. Brown.
ATTORNEY.

Published May 11, 1943

Serial No. 270,551

ALIEN PROPERTY CUSTODIAN

CANNULA HOLDER

Yoshimitsu Kono, Hiroshima, Japan; vested in the Alien Property Custodian

Application filed April 28, 1939

This invention relates to devices used for applying a cannula or similar instrument with the least vibration and positively located.

One of the objects of this invention is to provide a device that will hold an instrument firmly, and steadily in relation to the location to which an instrument of such a type is to be applied.

Another object is to provide a device that can be adjusted to a certain angle at which an inserted instrument can act most advantageously.

Another object is to provide a device that can readily be applied and removed while an instrument of the type referred to may be in operating position.

Another object is to provide a device that can be adjusted to suitably draw to, and hold material in, an advantageous tight or stretched condition, whereby to better facilitate a proper application of an instrument that is supported by the device.

Another object is to provide a device of this type with means whereby a good contacting and desirable holding may be assured.

Other objects will appear from the following description and appended claims as well as from the accompanying drawing, in which—

Fig. 1 is a top plan view of the device without any instrument inserted, being in closed and operative position, and having one half indicated in dotted lines to illustrate the opening of the device.

Fig. 2 is a side elevation of the device shown in Fig. 1, the adjustable supporting legs being partly broken away to not interfere with a clear illustration of the guiding tube member.

Fig. 3 is a fragmentary vertical section through the guiding tube member, having a portion of an instrument inserted therethrough.

Any one who ever had to make injections through the skin will admit that difficulties are encountered in various ways.

Whether a plain cannula, or any other suitable instrument is used, such as a hypodermic needle, it requires considerable experience to hold any such instrument steadily and properly pointed to accomplish a required injection to the proper location and in a proper direction.

Even though it may be said that persons using such instruments should be expected to have the necessary skill to assure a proper handling, it is believed that the device disclosed herewith will be of great help to eliminate, or reduce, undue strain on the nerves of such persons.

Particularly, it should be possible to eliminate any bending of any needle-like member to an extent to prevent any breaking.

Assuring a more steady application of any instrument should also eliminate any undue bending to any extent that might otherwise, without such a device, result in any undue deflection of the needle during injection.

The main frame of the device consists of two halves **5** and **5'**, connected by the hinge portions **6** and **6'**. This frame is preferably of a form that allows a clear observation of a suitably large surface, upon which this device is to be used, the two halves **5** and **5'** being therefore of somewhat a U-form, as will be clear from the illustration.

For the purpose of properly supporting and holding the frame on a surface, the adjustable legs **8** and **8'** are provided with friction contacting means **9** and **9'**, which may be of rubber, or any other suitable material.

The legs **8—8'** pass through holes **7—7'** at the corners of the frame, the holes being provided at an angle through the frame for purposes described more fully later on.

Adjusting screws **10—10'** serve to hold the legs in adjusted position within the frame.

A split tubular member is provided at a suitable point of the frame having an extension end **1—1'** projecting from the underside of the frame a suitable distance, forming a guiding passage **2**.

Also projecting from the underside of the frame is a guiding and locating post **4**, being of approximately the same length as the tubular member **1**.

Using the locating post **4** as a primary means for establishing contact with the surface upon which the device is to be used, it facilitates a definite placing of the device with regard to a point at which an injection is to be made preparatory to adjusting and setting the legs **8—8'**.

In using the post **4** as a preliminary locator and guide, moreover, the frame may be swung to any incline to align the passage through the tubular member **1—1'** with the point of intended injection and in the proper direction, facilitating a corresponding setting of the several legs to such incline-position so that the whole device may finally form a firm base by means of which a perfect injection can be expected and assured.

Furthermore, inasmuch as the desired proper positioning can be maintained by means of the locating post, the skin of the surface upon which the device is placed can be drawn and stretched by the fact of the inclined arrangement of the

legs, which will serve to further draw the skin from the moment that the contacting means 9—9' take hold.

From the above description and from the illustration, it should be clear that the downwardly spreading legs will assure exactly such a result, since the contacting means 9—9' of the legs 8—8' separate more and more as the legs are pushed outwardly further and further.

After the device has been adjusted to form a firmly established base, any co-operating instrument, such as merely roughly outlined at 12 in Fig. 3, is simply inserted into, and passed through, the passage 2 of the tubular member 1.

In cases where it is desirable, the device may readily be removed while the instrument is still in operating position, since the device may be opened as indicated in dotted lines in Fig. 1.

For injections along a spinal column, this device is of particular aid, since the locating post 4 can be used for finding the open spaces of the spine, or indicating the end of the processus spinosus, and the legs can be adjusted to bring the guiding tubular member to the desired angle for a proper injection into any desired space with regard to the column.

The stretching of the skin by means of the spreading legs furthermore facilitates the injection of any instrument, and a bending of the instrument, or any slipping of the hand on the surface of the skin is much less possible, so that misplacements of injections may be practically prevented.

Due to eliminations of touches of skin in the operating field by the hand of the operator, infections, or complications, in spine diseases may also be greatly prevented.

YOSHIMITSU KONO.

PUBLISHED
MAY 11, 1943.
BY A. P. C.

Y. KONO
CANNULA HOLDER
Filed April 28, 1939

Serial No.
270,551

FIG. 1.

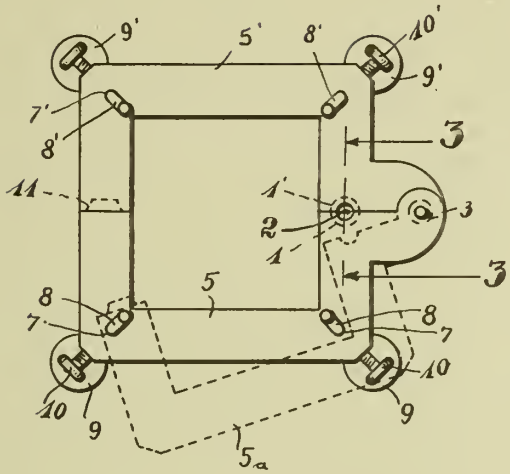

FIG. 3.

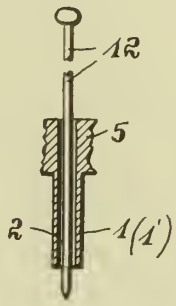

FIG. 2.

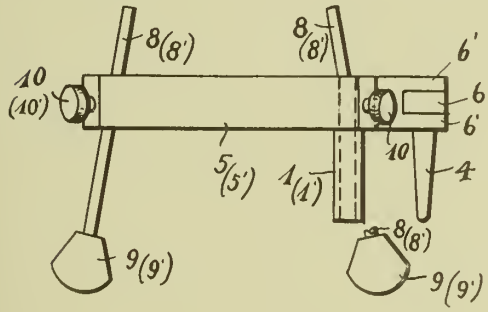

YOSHIMITSU KONO,

INVENTOR.

BY Otto H. Ringler,

HIS ATTORNEY.

Published Apr. 27, 1943

Serial No. 271,134

ALIEN PROPERTY CUSTODIAN

TELESCOPIC SIGHTS ON GUNS

Wolfgang Rossmanith, Solothurn, Switzerland;
vested in the Alien Property Custodian

Application filed May 1, 1939

This invention relates to telescopic sights for guns.

According to the invention, in a telescopic sight which is fixedly connected with a gun or a part of a gun mounting which is arranged to move with the gun, the sight is disposed in the gun casing or the mounting part so as to be totally enclosed by the casing or the part except for openings which are adapted to form windows for the object glass and the eyepiece, and the adjustment of the sighting allowance in the sight in accordance with the range is effected by a driving device which passes through a wall enclosing the sight.

As the walls enclosing the telescopic sight and accommodating the driving device can be made as strong as desired, and the windows for the object glass and the eye-piece can be closed by a cover when not in use, the fitted telescopic sight and its adjusting mechanism is well protected from the danger of damage, so that inexpensive telescopic sights of the type commonly sold may be used, such as, for example, those used for hunting purposes.

When the telescopic sight is provided with an internal indicating device which comprises a range scale disposed in the field of vision and a mark, which is moved as the sighting allowance is adjusted, the accuracy of the adjustment of the gun sight is not dependent on the accuracy of the driving device mounted on the gun or the gun-mounting part.

An example of a telescope in accordance with the invention is shown in the accompanying drawings in which Fig. 1 is a section through the telescope-mounting and Fig. 2 shows the field of vision of the sight having an internal indicating device.

Referring to the drawings, the telescopic sight 2 in Fig. 1 is held in a boring in the part 1 of the gun casing by the screw-threaded member 3. The windows for the object glass and the eye-piece can be covered by movable protective covers 4 and 5. A lever 6 pivotally mounted on the telescopic sight 2 serves for the adjustment of the sighting allowance. In a slot in the lever 6 there engages a pin 7 which is eccentrically mounted on the pin 8 which pivots in a transverse boring in the part 1 and is fixedly connected with the milled head 9. The rotary movement of the milled head 9 is limited by stops so that excessive rotation of the adjusting mechanism in the telescopic sight is prevented. The range scale is provided either on the periphery of the milled head 9 or advantageously in the interior of the telescopic sight.

In Fig. 2, 10 is the movable sight, 11 is a graduation mark which moves along the fixed scale 12 as the sight 10 moves. In this case the milled head 9 is turned until the mark 11 stands against the scale graduation corresponding with the range to be adjusted.

If in addition to the vertical sighting allowance a lateral sighting allowance is required, then in addition to the driving device shown in Fig. 1, one for lateral adjustment can be arranged which is offset by about 90° as compared with the device shown.

WOLFGANG ROSSMANITH.

PUBLISHED

APRIL 27, 1943.

BY A. P. C.

W. ROSSMANITH

TELESCOPIC SIGHTS ON GUNS

Filed May 1, 1939

Serial No.
271,134

Fig.1

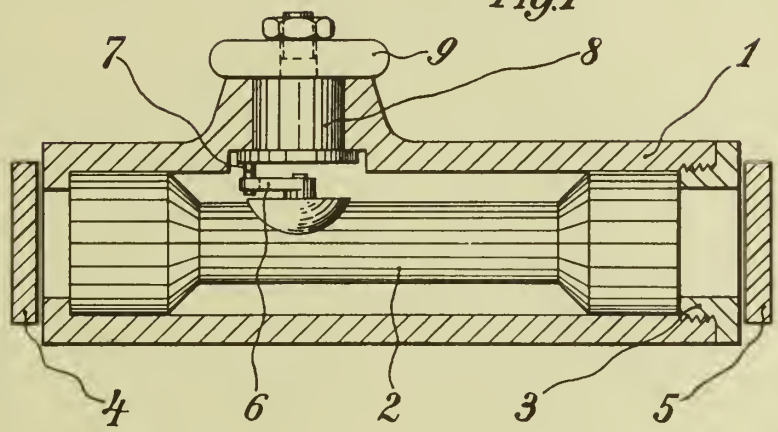

Fig.2

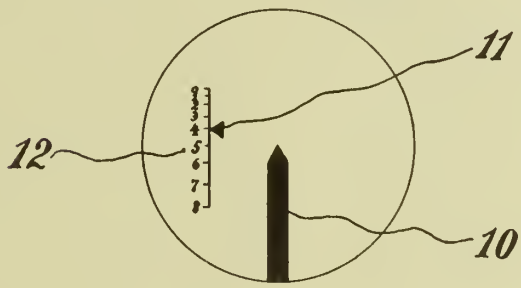

Inventor:
Wolfgang Rossmanith
By Young, Emery & Thompson
Attorneys

Published May 11, 1943

Serial No. 271,462

ALIEN PROPERTY CUSTODIAN

INJECTION INTERNAL COMBUSTION ENGINE WITH FUEL INJECTION INTO A COMBUSTION CHAMBER

Kurt Thomas, Gaggenau, Germany; vested in the Alien Property Custodian

Application filed May 3, 1939

This invention relates to an injection internal combustion engine with fuel injection into preferably a lateral combustion chamber constructed as a valve chest and controlled by the piston, and it consists substantially in that the lateral combustion chamber during the first part of the compression stroke communicates with the cylinder space practically unthrottled i. e. unthrottled or almost unthrottled, whereas, before the end of the compression stroke, it is cut off from the cylinder space during the duration of the injection and combustion procedures owing to passing of the piston. Machines with one or more cylinders come into question preferably with more than one valve for each cylinder. There may be several, but preferably one injection nozzle leading to the combustion chamber.

The invention also relates to an injection internal combustion engine with injection of the fuel into a lateral combustion chamber constructed as valve chest and controlled by the piston, in which the lateral combustion chamber shut off from the cylinder space at the end of the compression stroke or connected therewith only by a narrowed throttle cross-sectional area is constructed as valve chest for the vertical admission and discharge valves arranged side by side. The invention enables the use of a lateral combustion chamber serving as valve chest with particular advantage in injection internal combustion engines. As there is an almost unthrottled cross-sectional area between the combution chamber constructed as valve chest and the cylinder space during the greater part of the stroke, a good filling and complete scavenging of the interior of the cylinder is ensured. Moreover, the advantages of the engine with divided or separated combustion chamber are at the same time preserved because, owing to the cutting off of the lateral combustion chamber from the cylinder space by means of the piston in proximity to the upper dead centre position of the piston, a high inflow speed into the lateral combustion chamber and consequently an effective mixing of air and fuel in this combustion chamber are rendered possible, and furthermore a considerable increase in pressure is attainable in the combustion chamber as compared with the cylinder space with the result of a good atomization, distribution and combustion of the fuel air mixture passing into the cylinder space.

The invention may be applied to drop valves, but is of primary importance for the use of vertically arranged valves. Such valves present the advantage, as compared with drop valves and the like, that they allow a lower overall height of the engine, a constant valve motion and consequently a smooth operation of the valve gear, a fewer number of packing points and a simple cylinder head and lower cost of production. However, such valves, especially when admission and exhaust valves are to be arranged vertically side by side, presented difficulties in the case of injection internal combustion engines in as far as the necessary high compression conditions and the thorough mixing of the fuel and air necessary for good combustion could only be attained with difficulty. It was, moreover, impossible to attain such dimensions that a perfect filling of the cylinder and expulsion of the waste gases could take place. All these difficulties are overcome by the invention in spite of the use of two valves arranged vertically side by side.

It is advisable to construct the combustion chamber serving as valve chest as a whirling chamber or as a double whirling chamber, in which the air forced therein carries out a gyrating motion about the axis of the valve or valves.

To produce a particularly high speed of flow and a strong throttling between the lateral combustion chamber and the cylinder space, the lateral combustion chamber is shut off from the cylinder space by the piston already before the end of the compression stroke (for example 25° before the upper dead centre position of the piston or sooner), in such a manner that it communicates with the cylinder space only through a recess or aperture in the piston or in the cylinder head.

The fuel is preferably injected into the lateral combustion chamber in substantially the same direction as the air flowing into the combustion chamber through a narrowed connecting cross-sectional area formed at the end of the compression stroke between the cylinder space and the lateral combustion chamber. For assisting the ignition and the preparation of the fuel the fuel injection is preferably directed against the heat accumulating parts of the combustion chamber, for example against the hot valve discs arranged in the lateral combustion chamber.

The invention also relates to a particularly advantageous form of construction of the combustion chamber as whirling chamber, and of the injection passage extending from the nozzle.

An embodiment of the invention is illustrated by way of example in the accompanying drawing, in which:

Fig. 1 is a cross-section through the cylinder,

Fig. 2 is a longitudinal section through the valve chest,

Fig. 3 is a plan view of the engine with cylinder head removed, and

Fig. 4 and example of a diagram for the speed of the air flowing over into the lateral combustion chamber in dependency upon the crank position.

In Fig. 1 *a* is the cylinder, *b* the cylinder head, *c* the piston which in its upper position enters into a cylindrical recess *d* which is preferably arranged in the cylinder head. The combustion chamber *e* is arranged laterally in the cylinder casing and has in plan view a shape approximately corresponding to the figure "3" with part chambers *f* and *g*, in which the admission and exhaust valves *h* and *i* are arranged. These valves are slightly inclined towards the cylinder axis, the lower wall of the combustion chamber, accommodating the valve seats, sloping correspondingly downwards towards the interior of the cylinder. The combustion chamber is bordered at its upper end by a packing surface *k* of the cylinder head.

The fuel is injected into the lateral combustion chamber *e* through an injection passage and through an injection nozzle *l* arranged at an incline in the cylinder head. The injection passage is formed partly by a tapered bore *m* in the cylinder head and partly (in the upper dead centre position of the piston) by an inclined recess *n* in the piston.

It can be seen from Fig. 3, that the injection passage terminates in the lateral combustion chamber between the valves opposite the projection o of the wall forming the boundary of the combustion chamber.

The engine operates in the following manner:

During the greater part of the piston stroke the lateral combustion chamber *e* is connected with the cylinder space by a wide, almost unthrottled, rectangular aperture between the edges *q* and *r*, as shown particularly in Fig. 3. Thus, there is a wide passage cross-sectional area available between the cylinder space and the lateral combustion chamber for the suction air sucked through the valve *h* or for the exhaust gases expelled through the valve *i*. Consequently a good filling and an as far as possible complete expulsion of the exhaust gases from the cylinder are attained. During the upward movement of the piston the lateral combustion chamber *e* is controlled by the piston in the last portion of the compression stroke, for example in such a manner that the upper edge *p* of the piston commences to shut-off the combustion chamber at 45° before the upper dead centre position and, at 25° before the dead centre position (that is about 5% of the piston stroke from the upper dead centre position), enters into the recess *d* in the cylinder head. At this moment the lateral combustion chamber is almost closed by the piston and communicates with the cylinder space or with the recess *d* in the cylinder only through the inclined recess *n* in the piston. Fig. 4 shows the speed diagram of the air flowing over from the interior of the cylinder into the lateral combustion chamber. From the commencement of the shutting off of the combustion chamber by the piston the speed of the overflowing air increases rapidly until, at the end of the shutting off motion (about 25° before the dead centre position is reached), the air speed has attained its maximum value.

As the air is pushed from the cylinder space into the combustion chamber constructed as whirling chamber and valve chest, the air eddies, indicated in dotted lines in Fig. 3, are produced during the last portion of the compression stroke. At the same time the air current is divided up by the e. g. projecting edge *o* and caused to carry out oppositely directed turning movements about the axes of the part chambers *f* and *g* or of the valves *h* and *i*.

At the same time also the injection of the fuel commences at about 25° before the upper dead centre position is reached, the fuel being thoroughly mixed with the air both on its passage to the nozzle through the whirling chamber and also in the whirling chamber itself. The fuel jet is injected against the lower wall viz. against the projecting edge o of the rear closing wall of the combustion chamber between the valves *h* and *i* through the injection passage *m*, *n* in an inclined downward direction approximately corresponding to that of the overflowing air, the jet being deflected against the valves by the dividing air currents. As the valve discs have a relatively high temperature and are uncooled, they serve at the same time for assisting the preparation and ignition of the fuel, so that, in conjunction with the thorough mixing of the air with the fuel, a rapid ignition and a clean combustion are ensured. The injection of the fuel is approximately ended when the piston reaches its upper dead centre position.

By the combustion commencing with a short ignition delay an increase of pressure is produced in the lateral whirling chamber, which increased pressure, owing to the strong throttling which exists between the whirling chamber and the cylinder space up to about 25° after the upper dead centre position has been passed, that is as long as the communication between the two spaces is effected merely by the recess *n* in the piston, ensures a strong ejection and consequently an effective distribution of the mixture of the whirling chamber in the cylinder space. This scavenging of the whirling chamber is terminated at approximately 20 to 25° after the passing of the dead centre position. At this moment the upper edge *p* of the piston begins to uncover the wide aperture between the whirling chamber and cylinder space, so that a practically unthrottled communication is established between the two spaces, and an unimpeded expansion of the gases for combustion can take place.

KURT THOMAS.

PUBLISHED
MAY 11, 1943.

K. THOMAS
INJECTION INTERNAL COMBUSTION ENGINE WITH FUEL INJECTION INTO A COMBUSTION CHAMBER
Filed May 3, 1939

Serial No. 271,462

BY A. P. C.

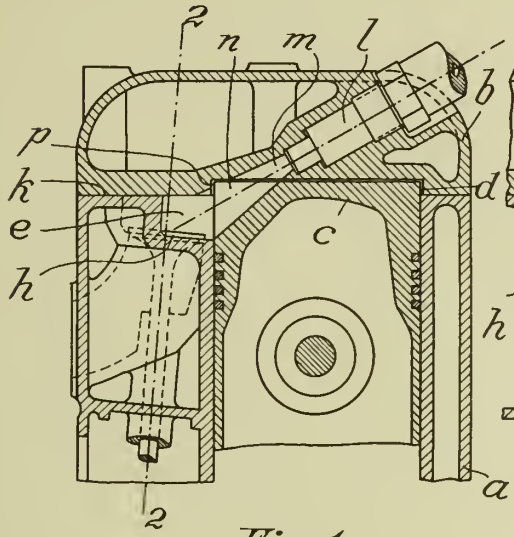

Fig. 1.

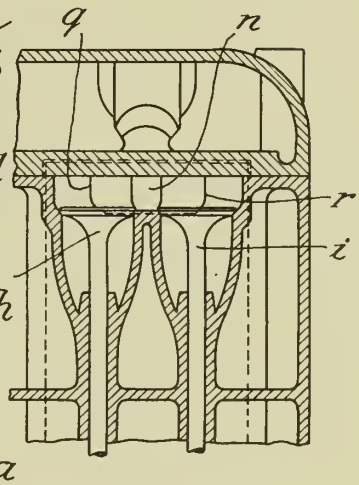

Fig. 2.

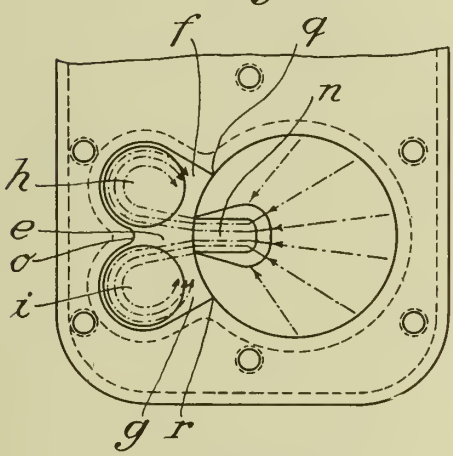

Fig. 3.

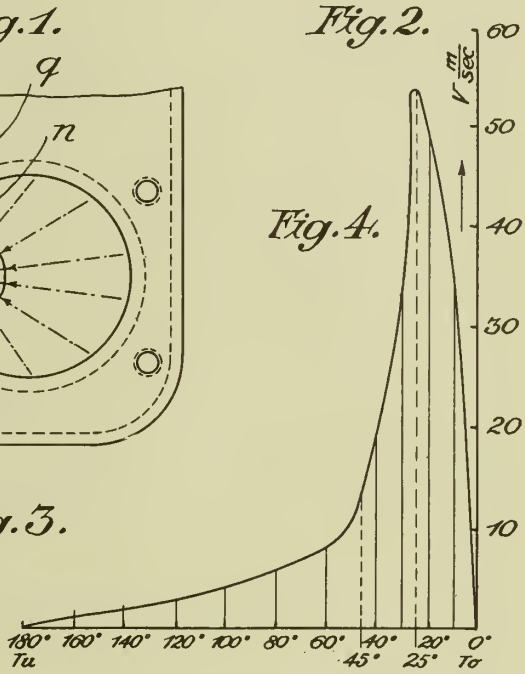

Fig. 4.

INVENTOR:
KURT THOMAS
BY
Haseltine, Lake & Co.
ATTORNEYS

Published May 11, 1943

Serial No. 273,365

ALIEN PROPERTY CUSTODIAN

INDIRECTLY OPERATING REGULATING OR CONTROLLING APPARATUS

Otto Lesser, Berlin-Charlottenburg, Germany; vested in the Alien Property Custodian

Application filed May 12, 1939

The invention relates to a controlling or regulating device, more particularly to devices in which a controlling impulse derived from a physical condition influences a relay controlling an auxiliary force. In such so-called indirectly operating controlling, respectively regulating devices it is customary to provide a so-called restoring device which either influences the position of the relay (position restoration) or the force (force restoration) in such a manner that the effect due to the relay (f. i. the stroke of the piston of a servo-motor) always remains equal in proportion to the impulse. Characteristic of each device is that the influence on the relay is first created by same. The restoring device is provided to avoid oscillations about the predetermined condition. Doubtlessly, this is achieved to a certain degree in that due to the restoration the controlling effect is always equal in proportion to the impulse value. If the impulse has become zero, the predetermined position is achieved, then as a result of the restoration the controlling effect has become zero. As, however, each controlling or regulating process is effected with more or less great inertia, the predetermined condition is not maintained at the moment in whch the controlling effect ceases. In spite of the restoring device the condition will swing past the predetermined condition. This well-known appearance may be successfully removed by using as controlling impulse not only the change in condition, i. e. the error, but also derivations of the change in condition in accordance with the time (velocity, respectively acceleration impulses). However, it is necessary to first create in these devices derivations of the change in condition and to provide for this purpose special impulse givers, which render such an arrangement complicated and expensive.

The device according to the invention differs fundamentally from the controlling devices operating with restoring devices and derivations, in that aside from the controlling impulse additional impulses controlled by the impulse giver influence the relay, which in case of an increase of the main impulse support said impulse and in case of a decrease of the main impulse oppose said main impulse.

It is practical to create the additional impulses by means of an auxiliary relay, actuated by the impulse giver, whose neutral position is displaced by the impulse giver in accordance with the value of the main impulse.

In accordance with the present invention, the restoring device is replaced by additional controlling impulses, which influence the relay and which are controlled by the impulse adjusting member in dependence on its position and movement determined by the impulse value. The entire impulse influencing the relay comprises a main impulse and an additional impulse, whose direction depends on the tendency of the impulse change. In case of an increasing impulse force the additional force has a supporting effect, in case of decreasing tendency of the impulse force the auxiliary force operates in opposition to the first. In case of decreasing impulse force an opposing effect is created by the said additional force, which prevents oscillation past the predetermined condition so that the condition aperiodically passes into the predetermined condition. In such a way the dissymmetry arising also in case of a rigid restoring device is avoided.

By means of two schematically illustrated embodiments the invention is explained in detail in the following:

A pressure chamber **3** closed by means of a diaphragm **2** is provided in a casing **1**; said chamber being connected to a pressure conduit not illustrated. The pressure in the chamber **3** should be adjusted to a constant value. In case of a pressure change the stroke of the diaphragm **2** is transmitted by means of a pressure pin **4** to an impulse transmitting lever **6** rotatably mounted at **5**. An adjusting spring **7** engaging the lever **6** operates in opposition to the pressure on the diaphragm **2** and maintains the lever **6** in equilibrium. The movements of the lever **6** are transmitted to an adding lever **8** by means of an intermediate member **9**. The adding lever **6** is connected by means of a further intermediate member **10** to a jet pipe **11**, which admits by way of the nozzle piece **12** of the distributer a servo-motor (not illustrated) connected to same, by means of whose movement (throttle valve adjustment or the like) the pressure in the chamber **3** is influenced.

A bipolar relay switch **14** is turnably mounted at **13**, between whose contacts **14'**, **14''** a contact spring **15** arranged at the end of the lever **6** has a slight play. If the contact spring **15** touches one of the two contacts **14'**, **14''**, the circuit of either the magnet coil **16'** or **16''** is closed. The magnet coils influence an armature **17** fastened to the other end of the adding lever **8**. In case of non-excited magnet coils **16'**, **16''** the adding lever **8** is held in the middle position by means of a spring **18**.

The mode of operation of the device is the following:

If the pressure in the chamber **3** increases, the lever **6** is deflected in accordance with the pressure increase and moves by means of the rod connection **8**, **9**, **10**, the jet pipe **11** in the usual manner so that a controlling process aiming to decrease the pressure is commenced. Simultaneously the relay **14** is turned a little by the lever **6** in anti-clockwise direction. In this case the circuit of the coil **16''** is closed between **15** and **14''** and the armature **17** is drawn up. In this

way an addtional impulse is effective on the jet pipe in the same sense as directly by means of the lever 6. Due to the immediately commencing controlling process the pressure in the chamber 3 drops. Long before the pressure has again reached the predetermined value, the lever 6 has already gone back to a slight degree. The contact 15, 14'' is opened and in case of a slight advancing movement of the lever 6 the contact 15, 14' is closed. Thus the coil 16' receives current and draws the armature 17 to the other side. This process results in an opposite impulse on the jet pipe, thus commencing the controlling process again in the sense of a pressure increase. But before the chamber 3 has again achieved the increased exit pressure, the lever 6, respectively the spring 15, has again left the relay contact 14' and made contact with 14'', i. e. the jet pipe is again reversed. This process is repeated until the lever 6 has again taken up its normal position corresponding to the predetermined pressure value. Thus the lever 6 displaces the relay contacts 14', 14'' in accordance with its impulse deflection and oscillates during the controlling process between these contacts 14', 14'', by means of which alternately supporting and opposing additional impulses are transmitted to the jet pipe 11. As long as the predetermined value has not been achieved in the chamber 3, the lever 6 and its engaging point at the lever 8 consequently have not yet reached their normal position, the jet pipe 11 still oscillates dissymmetrically to the distributing nozzles 12 and adjusts, therefore, the controlling member by means of amplitudes which become smaller and smaller until the predetermined value has been achieved.

Fig. 3 illustrates the controlling diagram created by this controlling process.

Naturally, the auxiliary impulses created by the relay switch 14, 14', 14'' may also, as illustrated in Fig. 2, be created by a pressure means relay. The auxiliary jet pipe 19, which oscillates between the stops 19', 19'', is moved by friction by means of an actuating device 20, between whose two fork-like stops 21', 21'', having slight play, the lever is arranged. The distributing piece 22 of the auxiliary jet pipe is connected to a differential pressure system 23 having the adding lever 8 between its parts. The mode of operation of this pressure means relay may easily be understood.

For the invention it is unimportant whether the additional impulses, influencing the relay 11, are created by means of relays or by mechanical transmission of the movement of the lever 6 or in any other way.

Of course, one may also provide photo-electric or glow discharge relays or temperature sensitive relays for this purpose. Whether a pressure or another force, tension, light- or temperature intensity influences the lever 6 as impulse, is unessential for the idea of the invetnion. The device is also suitable for the automatic control of vehicles and the like.

OTTO LESSER.

PUBLISHED

MAY 11, 1943.

BY A. P. C.

O. LESSER

INDIRECTLY OPERATING REGULATING OR CONTROLLING APPARATUS

Filed May 12, 1939

Serial No. 273,365

Fig. 1

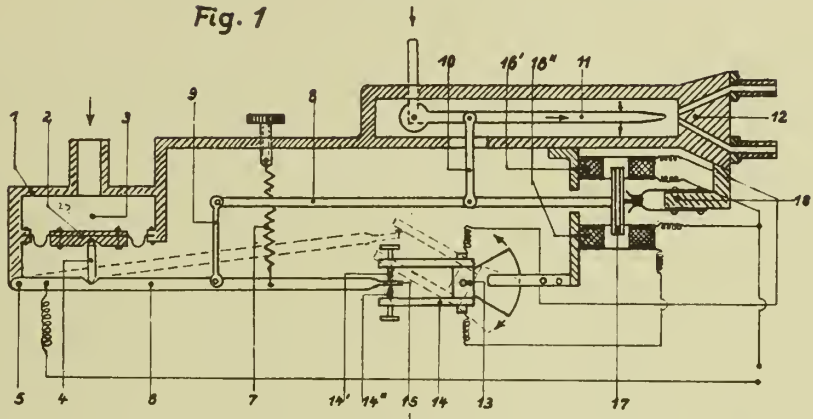

Fig. 2

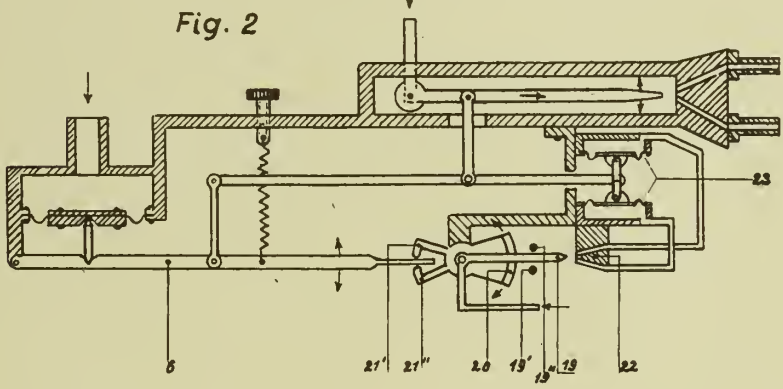

Fig. 3

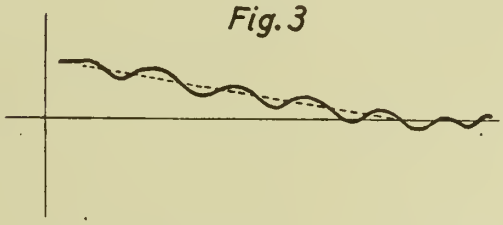

Inventor:

Otto Lesser.

By A. D. Adams

Attorney

Published May 11, 1943

Serial No. 273,397

ALIEN PROPERTY CUSTODIAN

LAMINATED BODY

Erwin Komenda, Stuttgart-Korntal, Germany;
vested in the Alien Property Custodian

Application filed May 13, 1939

This invention relates to a laminated body, and more particularly to the construction of a vehicle body formed of laminated sheets of artificial material.

An object of this invention is the provision of a novel sheet of laminated artificial material.

A further object of this invention is to provide an improved ribbed or edged sheet of laminated artificial material.

Another object of this invention is the provision of an improved ribbed or edged vehicle body part formed of laminated artificial material.

Still another object of this invention is to provide a novel roof structure for a vehicle body formed of laminated artificial material.

An additional object of this invention is to provide a roof structure for a vehicle body formed of laminated artificial material with integral strengthening ribs or mouldings.

A more specific object of this invention is the provision of a ribbed or edged roof structure for vehicle bodies of laminated artificial material, wherein the said ribs or edges are made as an integral continuation of at least a part of the laminations of the main roof structure.

Other objects will become apparent from the following description taken in connection with the attached drawing showing two illustrative embodiments of the invention, and wherein:

Fig. 1 is a cross-sectional view through the central part of a vehicle roof, showing one embodiment of my invention; and

Fig. 2 is a transverse cross-section through the edged portion of the roof and the side wall of the vehicle body.

In the first embodiment of this invention illustrated in Fig. 1, which shows a longitudinal central cross-sectional view of a portion of a vehicle roof formed of laminated artificial material, there is illustrated the manner in which a part 1 of the longitudinally extending lamination is folded to form a transverse strengthening rib 2, while the remaining laminations 3 extend continuously without deformation to form the remainder of the roof structure. It will be noted that aside from the position of the rib 2, the laminated roof structure is not altered, and that those parts of the laminations 1 which are folded to form the rib are merely integral folded or curved portions of the remainder of the laminated roof structure.

The laminated sheet forming the roof structure may be made in any manner known to the art, such, for example, as from super-imposed layers of paper of fabric with layers of a phenol resin, which has been heated and pressed together to form a laminated integral mass. Instead of a phenol resin, cellulose, thiourea and similar compounds could readily be used.

The formation of a transverse or strengthening rib for a vehicle roof in the manner described above, adds materially to the rigidity of the roof, as contrasted with other types of ribbing which have therefore been used. It has been proposed to form a desired strengthening rib by adding supplemental transverse strips of laminations to the laminated body before heat and pressure have been applied, whereupon the artificial material acts to bind the added lamination through the rest of the sheet. It has also been proposed to add ribs consisting solely of the artificial material without laminations. In neither of these cases do the ribs contribute toward really increasing the rigidity of the structure, while at the same time they are easily broken, as for example, in a collision. Such breaking results in producing a large number of splinters, making this type of construction extremely dangerous. Since, in the present case, the ribs are merely a continuation of the laminations of the main part of the roof they not only produce a desired strengthening action, but will not burst and splinter in case of collision.

The same principle is applied in the second example illustrated in Fig. 2. In this case, at the side edges of the roof, the laminated sheet is split into two parts forming integral continuous edgings 5 and 7 which may surround the side wall of the vehicle, here shown as formed of a further folded laminated sheet of material 8. A construction of this character not only permits a rigid and smooth interconnection between the roof and the side wall, but in addition, the two ribs 5 and 7 act as longitudinal strengthening beams for the sides of the vehicle.

Obviously, the principles of this invention are capable of many applications. For example, the ribs and mouldings can be formed of laminated sheets of material which have been folded several times so that broad ribs and mouldings of still greater strength will result. While the invention is particularly adaptable in the production of vehicle body parts, it may find use in the formation of other parts, particularly involving those of difficult shape. In all cases, however, this will result in a part having extremely high rigidity and strength in all directions, and one which is not easily splintered upon impacts.

ERWIN KOMENDA.

PUBLISHED
MAY 11, 1943.
BY A. P. C.

E. KOMENDA
LAMINATED BODY
Filed May 13, 1939

Serial No.
273,397

Fig. 1

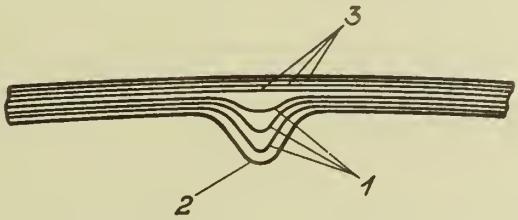

Fig. 2

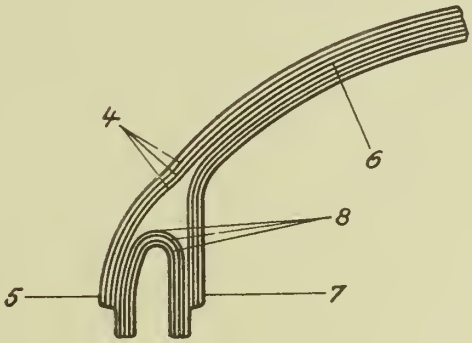

Inventor
ERWIN KOMENDA
By A. A. Hicke
Attorneys

Published May 11, 1943

Serial No. 273,885

ALIEN PROPERTY CUSTODIAN

FLOOR COVERING

Johan Leon Goudsmit, Nijmegen, Holland; vested in the Alien Property Custodian

Application filed May 16, 1939

My invention relates to a floor covering and a process of producing same. It has particular reference to a floor covering which consists of several layers and comprises an upper layer of rubber and an underlayer of felt paper or similar material which is protected against the influences of moisture by being impregnated with an easily liquefiable substance such as bitumen.

The drawings affixed to this specification and forming part thereof illustrate diagrammatically by way of example in an enlarged scale two modifications of my invention.

In the drawings

Fig. 1 is a sectional view of a floor covering made according to my invention and

Fig. 2 is a sectional view of another modification of such floor covering.

Although it is known that rubber possesses properties which make it apt as a floor covering, the use of rubber floor coverings is very limited in practice mainly because of the high price. For in order to obtain a good and permanent layer on the floor, a rather thick layer of about 5 mms. rubber is required, and in many cases it has been found necessary to also glue this layer to the floor.

It has already been suggested to employ a somewhat thinner layer of rubber and to connect it with an underlayer of some cheap material like felt paper. Such underlayers show however the drawback not to prevent the penetrating of moisture and they must therefore be protected by an impregnation for instance with asphalt. It is however very difficult to connect such an impregnated underlayer with a rubber layer.

In the British patent specifications No. 275,685 and No. 308,504 a method has been disclosed to make such connection by vulcanizing the rubber layer after it has been united with said underlayer. This method has however been proved impracticable since the impregnating substance liquefies at the temperature, which is required for the vulcanization, and separates therefore from the underlayer so that the homogenity of the impregnation gets lost.

According to the proposal suggested in British patent specification No. 246,927 a sticking substance is applied between the rubber layer and the underlayer. A special glue must be used in this case which at a relatively low temperature attaches to the already vulcanized rubber and to the impregnated underlayer. Thus the process of manufacturing is rather complicated and expensive. In addition thereto the process shows the same drawback which appears also in the case, that a vulcanized rubber layer should be connected under high pressure with an impregnated underlayer. The thickness of the rubber layer cannot sufficiently be reduced in these cases so as to secure an end product as cheap as required. If a rubber layer of less than 2 mms. is employed, the surface does not appear sufficiently smooth, but shows even in the presence of only slight irregularities so-called shrinked parts which are clearly visible.

According to my invention the thickness of the rubber layer can be as small as 1 mm. or still smaller. I connect the vulcanized rubber layer by vulcanization with another layer, which in the final product acts as an intermediate layer and to which the homogeneously impregnated underlayer can also be attached. The intermediate layer may be made of any material which can be affixed to the rubber layer as well as to the underlayer and which is adapted to impart to the rubber some solidity of shape so that irregularities however little are avoided. Thin fabrics, preferably of jute, have been found particularly suitable as materials for the intermediate layer. Since this intermediate layer, when connected with the rubber, can be made to adhere to the underlayer of felt paper already by a slight increase of pressure and by a small raise of temperature, the application of a sticking or adhesive substance can be dispensed with, so that the floor covering and the process of manufacturing same is simpler and cheaper than hitherto possible.

The fabric layer may be attached or affixed to the lower side of the rubber layer in any known manner, for instance by connecting the fabric layer with the aid of glue to the not yet vulcanized rubber layer and subsequently vulcanizing the two layers together.

Immediately after the manufacture of the layer of vulcanized rubber, provided with the fabric layer, the underlayer may be united therewith in one operation by leading the layers together between a pair of rolls. One of these rolls, viz. that to which the impregnated layer of felt paper is guided, may be sufficiently heated in order to soften the impregnating substance of the felt paper layer in such a degree that the connection with the intermediate layer is effected without the impregnating substance being capable of flowing off.

The paper layer also may be connected at both sides with a rubber layer with an intermediate fabric layer so that not only protection against moisture but also against other influences and damages is secured.

In the drawings **1** are layers consisting of vulcanized rubber and having a thickness of about 1 mm. **2** are the intermediate layers employed in accordance with my invention, while **3** is a layer of felt paper homogeneously impregnated with a substance such as bitumen.

Various changes may be made in the details disclosed in the foregoing specification without departing from the invention or sacrificing the advantages thereof.

JOHAN LEON GOUDSMIT.

PUBLISHED

MAY 11, 1943.

BY A. P. C.

J. L. GOUDSMIT

FLOOR COVERING

Filed May 16, 1939

Serial No.
273,885

FIG·1

FIG·2

Inventor:
Johan Leon Goudsmit
by Michalek & Michalek
Attys.

Published May 11, 1943 Serial No. 275,543

ALIEN PROPERTY CUSTODIAN

PRODUCTION OF VITAMIN-F PREPARATIONS

Felix Grandel, Emmerich am Rhein, Germany; vested in the Alien Property Custodian

No Drawing. Application filed May 24, 1939

This invention relates to the production of Vitamin-F preparations and has for its object to provide such a preparation which will be highly efficient and also very durable, the preparation being suitable for application, for example, through the natural pores of the skin or by way of the rectum.

It is known that various vegetable and animal fats contain a material which when applied through the natural pores of the skin and/or by way of the mouth favourably affect skin diseases and allergic diathesis. This material, which in smallest quantities is effective and cannot be synthesised from living organisms, is generally termed Vitamin-F. It is made up in detail of certain stereoisomeric forms of 9,10-linoleic acid, which makes the Vitamin-F substance effective. The pure 9,10-linoleic acid and also the natural or fractionated linseed oil fatty acids, which up to the present time have been known as Vitamin-F concentrates up to 50,000 Shepherd-Linn-Units per g., have several disadvantages. They not only change their aggregate condition with the slightest change of outside temperature, but they have a strong smell and they are also unstable in colour upon exposure to light, air, oxygen and like influences. Such Vitamin-F concentrates when preserved in the dark, become directly coloured after a few months and smell unpleasantly; also their biological effect is considerably lowered.

These disadvantages are often increased if the Vitamin-F concentrate of the 9,10-linoleic acid is diluted with other materials or is finely divided, for example, emulsified. The smell and stability of oil-in-water and water-in-oil emulsions, as often used in cosmetics in the form of creams, deteriorate noticeably with additions of Vitamin-F concentrates of the 9,10-linoleic acid type; the results are not suitable for storage or for use in tropical climates and they lose their Vitamin-F effectiveness.

It has now been surprisingly found that certain fractions of unsaturated carboxylic acids and their stereoisomeric forms containing two or more conjugated double linkages in the molecule have an increased power of Vitamin-F effectiveness as compared with that possessed by the 9,10-linoleic acid, (α, β, φ) if they are used in dilution with a biologically ineffective solid or liquid substance, for example a salve base, water or the like; whereas the pure, undiluted fatty acids of this type have been shown as applied through the skin of the tail of a rat to be not only biologically ineffective but also to lead to toxic phenomena.

According to the present invention, therefore, a process for the production of a durable highly efficient Vitamin-F preparation consists in diluting an unsaturated carboxylic acid or a stereoisomeric form thereof, containing two or more conjugated double linkages in the molecule with a solid or liquid biologically ineffective material in the form, for example, of a salve base or a powder or an oil or an aqueous liquid.

The following fatty acid fractions have been found to be highly effective for the purposes of the invention, that is, in dilution in a suitable biologically ineffective material as above described:

(1) The two-fold conjugated unsaturated 9,10-linoleic acid (trans-cis-octadecadiene acid):

$$CH_3.(CH_2)_5.(CH{=}CH)_2.(CH_2)_7{-}COOH$$

(2) The three-fold conjugated unsaturated elaeostearic acid:

$$CH_3.(CH_2)_3.(CH{=}CH)_3.(CH_2)_7{-}COOH$$

(3) The three-fold conjugated unsaturated wood fatty acid of the oiticia oils, the lican acid:

$$CH_3.(CH_2)_3.(CH{=}CH)_3.(CH_2)_4.CO.(CH_2)_2{-}COOH$$

(4) The four-fold conjugated unsaturated parinaric acid of the factor of parinarium laurinum, the constitution of which has been recently explained by H. P. Kaufmann and J. Baltes (see "Fette und Seifen", 45, 302, 1938):

$$CH_3CH_2.(CH{=}CH)_4.(CH_2)_7{-}COOH$$

Within the invention fall all preparations which are made from nautral and/or synthetic mixtures and the carboxylic acids with two or more conjugated double linkages in the molecule, including, for example:

(1) The natural fats in the form of wood oils, oiticia oil.

(2) The natural, but chemically modified, fatty oils, for example dehydrated ricinus oils, dehydrogenised fats of all kinds, and

(3) The natural, physico-chemically modified fats.

In general, unsaturated carboxylic acids containing two or more conjugated double linkages in the molecule as the term is used herein, include all such substances and/or mixture of substances which are adapted to impart to a healing preparation or a preparation for the care of the body or again a washing, dispersing or wetting medium, a Vitamin-F effect on the skin.

It has also been found that washing, dispersing and wetting agents, by the addition to them of the aforesaid conjugated unsaturated com-

pounds, partly or entirely lose their skin damaging properties, which is of special practical importance when washing the hands, the skin of the hands after washing being smooth and flexible.

Under washing means in the sense in which this term is used herein are included not only normal soaps based on fatty acid salts, but also all synthetic soaps such as the fat-alcohol-sulphonate and Turkey Red oil forms of soap, condensation products of fatty acids and albumen of the Lamepon type, and soapless washing agents, for example alkalis which have been biologically and/or by dissolving means, rendered effective, and their mixtures.

The invention is based on the discovery that whilst the carboxylic acids in question are completely biologically ineffective in the pure or unadulterated form and are generally poisonous in this form, they become profoundly affected in these respects by dilution with other, biologically ineffective materials, with the result that the acid acquires a high Vitamin-F effectiveness and its poisonous effect disappears. At the same time, a Vitamin-F preparation is formed which is highly durable in the sense of being self-protected from autoxidation, polymerisation and resulting inactivity, with the result that the preparation can be stored for long periods of time and will withstand the deleterious influence upon it of tropical climates.

Among the substances above mentioned rendered Vitamin-F effective by dilution in the manner referred to, there are some which with very little dilution are specially serviceable from the point of view of practical use in pharmacy and cosmetics, for example the 9,11 octadecadiene acid (as against the known 9,10-linoleic acid), which has the advantage of being a water clear liquid which remains liquid down to a temperature of —7°C. and is ineffective by light or air.

The following specific examples are illustrative of the invention:—

Healing and Wound Salves

Example 1

9,11 octadecadiene acid	1.0
Vaselinum album	50.0
Anhydrous eucerin sufficient to make up to	100.0

(About 2,500 Shepherd-Linn-Units per g. substrat).

Example 2

9,11 octadecadiene acid	0.4
Adeps benzoatus, sufficient to make up to	100.0

(About 1,000 Shepherd-Linn-Units per g. substrat).

Example 3

9,11 octadecadiene acid	0.25
Oleum camphoratum	2.0
Lanoline sufficient to make up to	30.0

(About 1,000 Shepherd-Linn-Units per g. substrat).

Paste

Example 4

9,11 octadecadiene acid	1.0
Pasta Zinci, sufficient to make up to	50.0

(About 5,000 Shepherd-Linn-Units per g. substrat).

A Wound Powder

Example 5

9,11 octadecadiene acid	1.0
Lanoline	1.0
Boric acid	2.5
Zinc oxide	20.0
Bolus alba (white aluminium oxide, sufficient to make up to	100.0

(About 2,500 Shepherd-Linn-Units per g. substrat).

Suppository

Example 6

9,11 octadecadiene acid	2.0
Oleum cacaonis, sufficient to make up to	100.0

(About 5,000 Shepherd-Linn-Units per g. substrat).

Skin Function Oil

Example 7

Elaeo stearic acid	0.2
Oleum vaselini, sufficient to make up to	50.0

(About 1,000 Shepherd-Linn-Units per g. substrat).

Skin Cream (cold cream)

Example 8

An emulsion is made from:—

9,11 octadecadiene acid	0.4
Cetyl alcohol	20.0
Liquid paraffin	20.0
Vaselinum album	59.6
Water (37.5%)	60.0

(About 2,500 Shepherd-Linn-Units per g. substrat based on dry substance).

Hair Lotion

Example 9

Lican acid	0.1
Spirit	60.0
Odorous spirit	5.0
Glycerine	5.0
Salicyclic acid	2.0
Distilled water, sufficient to make up to	100.0

(About 250 Shepherd-Linn-Units per g. substrat).

Face Lotion (which at the same time is a disinfectant)

Example 10

9,11 octadecadiene acid	0.2
Triethanolamine	0.5
Glycerine	4.0
Spirit	33.0
Perfume	0.8
Distilled water	62.0

(About 500 Shepherd-Linn-Units per g. substrat).

FELIX GRANDEL.

Published May 11, 1943

Serial No. 276,257

ALIEN PROPERTY CUSTODIAN

METHOD OF PRODUCING METALLIC COATINGS

Heinz Barwich, Berlin-Halensee, Germany; vested in the Alien Property Custodian

Application filed May 27, 1939

This invention relates to a method of producing metallic coatings on bodies consisting of any materials. The object of the invention is to provide a metal support with an adhesive metallic coating. In the case of bodies made of different materials it has hitherto not been possible to provide them with surface layers consisting of any desired metal, since the metals do not always adhere in a uniform manner but in some cases only to a slight extent or not at all depending upon the nature of the body to be provided with the coating. This fact makes it difficult, for instance, to produce soldered joints between bodies consisting of certain metals to which the layer adheres only to a very slight extent.

The invention provides means, whereby the production of adhesive metallic coatings on any desired bodies is made possible for different purposes; for instance, for the production of soldered joints. According to the invention the bodies to be provided with a coating are immersed in molten metal and set in rapid mechanical vibrations. It has been found that also very good adhesive coatings may be produced when using bodies and coating metals with which it has hitherto been impossible to produce adhesive coatings. The effect of the method is due to the fact that the surface of the bodies is rendered to a considerable extent absorptive with respect to the coating metal by causing with the aid of mechanical vibrations a separation of the surface oxide layer from the metal bodies or in the case of insulating bodies a removal of the particles which cover the pores of the insulating bodies, as well as to other phenomena which have not yet been sufficiently explained.

Fig. 1 shows one form of the invention for carrying out the above method, and discloses an arrangement, whereby it is possible to provide, for instance, an insulating body with a metallic surface coating.

In a vessel 1 made of metal is contained the molten metal 2. The insulating rod 3 is immersed in a bath to such an extent as to touch the bottom of the vessel. The latter is set in rapid mechanical vibrations through a support 4 secured thereto. In this case a compact and good adhesive metallic coating which withstands also high mechanical and thermal stresses is produced on the insulating body. Of course, it is not necessary as shown in Fig. 1 to set the rod 3 in vibration by means of the vessel 1; the rod may be clamped in a suitable gripping device through which the mechanical oscillations may be imparted to the rod. Depending upon the circumstances, particularly as regards the shape of the body to be coated, the expansion of the surface thereof and the resistance of the body preference is given to the one or the other method.

As already above mentioned, the method according to the invention may also be employed to a great advantage for the production of soldered joints between bodies of any desired metals, particularly of easily oxidizable metals. In these bodies it has hitherto been always difficult or impossible to produce resistant soldered joints, since there is always a more or less fine oxide layer on the surface of the body, preventing the solder from adhering to the surface. However, if the joint of the bodies is set in rapid mechanical vibrations as this is the case with the method according to the invention, then the fine film of oxide is separated from the surface of the body so that the solder may come into direct contact with the metallic surface of the body and firmly adhere thereto.

The novel method is adapted for use in the production of soldered joints for various metals and alloys; thus, for instance, for soldering aluminum in an advantageous manner, which has been hitherto only possible by the use of expensive special solders. The method may also be employed to advantage for soldering aluminum alloys, iron alloys, as well as highly refractory metals.

The mechanical vibrations may be imparted to the bodies to be soldered in different ways. It is particularly advantageous to set any body, for instance, a tube in vibration and to bear the body to be soldered during the soldering process or during the application of the solder to its surface against the tube so as to impart the vibrations of the tube to the body to be soldered. This may be accomplished, for instance, by the arrangement shown in Fig. 2.

In this figure 11 denotes a nickel tube, to the lower end of which is hard-soldered a copper extension tube 12 closed at the lower end thereof. A solenoid 13 energized by high-frequency currents supplied by a high-frequency transmitting device 25 is arranged near the upper end of the nickel tube 11. By the action of the solenoid 13 the tube 11 together with its extension 12 is set in mechanical vibrations. The upper portion of the nickel tube is cooled in order to dissipate the heat developed by the magnetic losses. To this end, a glass body 15 is placed over the tube 11, a glass tube 16 of a smaller diameter being inserted in the tube 11. Between the neck

of the glass body 15 and the tube 11 is arranged a rubber ring 14. The tube 11 is closed at the lower end thereof by a nickel plate 17. The cooling water passes into the nickel tube 11 through the upper opening of the tube 16, reverses its direction of flow at the plate 17 and flows through the hollow space of the glass vessel 15 and through the connecting branch 18 back into the water cooling system (under circumstances to the re-cooling system).

19 denotes an aluminum sheet, a portion of which is provided with a tin coating 20 in order to unite it with another aluminum part or a body of another metal. The coating is applied to the aluminum sheet in the following manner:

Heat is applied to the aluminum sheet, for instance, by means of a Bunsen burner 21 and the sheet upon further application of heat is then pressed against the rounded-off end of the copper tubular extension 12 which is as already mentioned set in mechanical vibrations. At the same time, the solder is applied to the surface of the aluminum sheet 19 and distributed over the portion of the surface to be coated therewith by means of the tubular extension 12, heat being continuously applied thereto. This is continued until a uniform coating of the solder is produced.

Of course, the soldering process may also be effected with the aid of the usual soldering copper. In this case, the parts to be soldered are so pressed against the vibrating tube that the vibrations are imparted to the parts to be soldered in a reliable manner. The joint is treated as usual with the soldering copper, it being always essential that the parts at the joint be set in mechanical vibrations. In the embodiment shown the soldering copper may be approached to the joint to be soldered laterally of the arrangement. However, the entire arrangement may also be operated in the inverted position so that the tubular extension 12 points in the upward direction; the soldering may then be effected from above by means of the soldering copper.

It is also possible to insert the solder between the two parts to be united, to press the two parts against the vibrating tubular extension and to apply heat thereto. In this manner very durable joints may be obtained.

The method according to the invention may also be employed in coating wires or bundles of wires with tin, for instance, in the manufacture of cable terminals. In this case, as shown in Fig. 3, the wires 22 are immersed in a container 24 filled with molten tin 23, the container being set in vibrations as described above.

The vibrations are then transmitted from the container to the molten solder and then to the wires to be coated. To impart the vibrations from the container to the wires in a more effective manner, it is preferable to press the wires when immersing them in the molten solder against any point of the vibrating container; for instance, against the bottom.

Of course, it is also possible to set the wires in mechanical vibrations by securing them, for instance, in a tube or to another metal support which vibrates. If another aluminum sheet is to be soldered to the aluminum sheet 19 it may be treated in the same manner, and the coated surface portions may be arranged one upon the other and united with one another by the application of heat.

Depending upon the thickness of the material of the parts to be united, the most favorable action may be obtained with the aid of different frequencies of the mechanical vibrations. In the case of mass production, for which the method according to the invention is very suitable the most favorable frequency may be adjusted, for instance, for a number of work pieces with respect to a reference test piece and the individual pieces may be soldered one after the other. In general, the most favorable frequencies do not lie as numerous tests have shown within the range of the audible frequencies, which is an advantage, since the soldering devices operate noiselessly.

HEINZ BARWICH.

PUBLISHED

MAY 11, 1943.

BY A. P. C.

H. BARWICH

METHOD OF PRODUCING METALLIC COATINGS

Filed May 27, 1939

Serial No. 276,257

Fig. 1

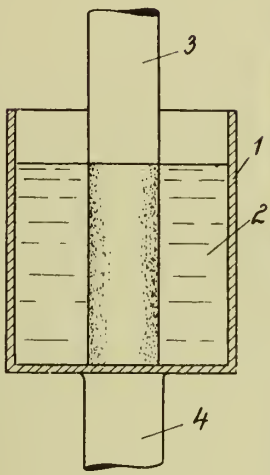

Fig. 2

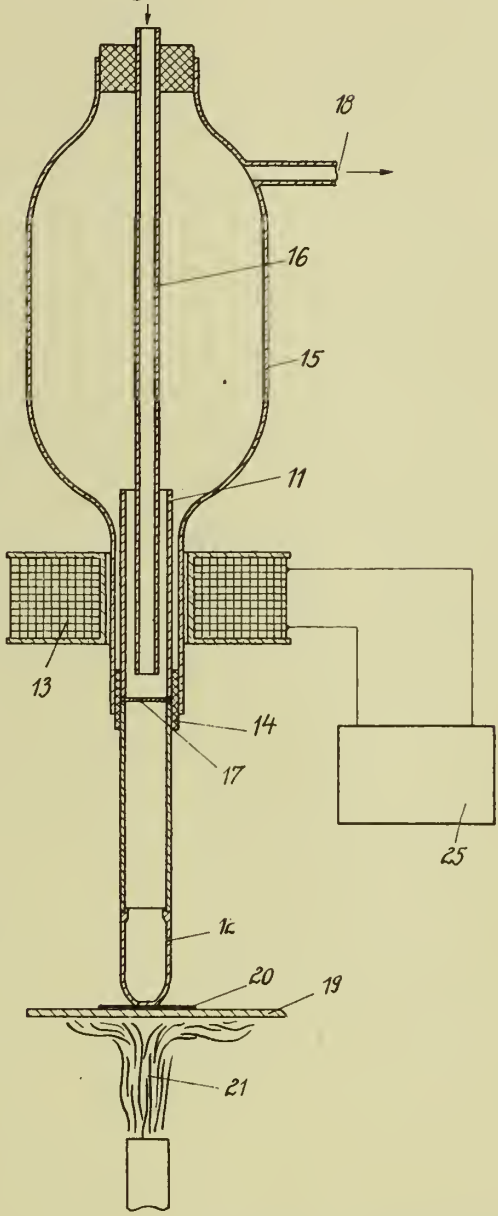

Fig. 3

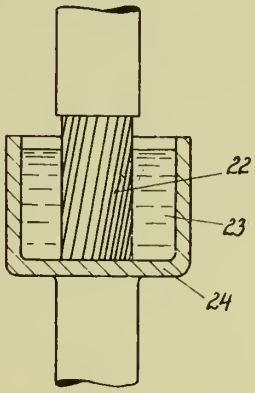

HEINZ BARWICH

Published May 11, 1943

Serial No. 277,259

ALIEN PROPERTY CUSTODIAN

IMPREGNATING PREPARATION WITH INSECTICIDAL EFFECT FOR TEXTILE GOODS

Paul Nestler, Rabenstein, Germany; vested in the Alien Property Custodian

No Drawing. Application filed June 3, 1939

This invention relates to an insecticidal impregnating preparation for textile goods for protecting against the stings of insects the portions of the body clothed with these textile goods.

Known preparations of this kind are open to the objection that their effectiveness is only of short duration, moreover the smell of these preparations is so strong that it is mostly found disagreeable. These objections are an obstacle to the general introduction of such preparations. Known insecticides are for example alcoholic solutions of formaldehyde, with which stockings and gloves are saturated. Another known preparation is a mixture of soap, oil of cloves and extract of pyrethrum. Whereas the former does not remain effective for long, the latter is stable but has a very penetrating smell and is relatively expensive. To overcome these objections it has also been proposed to make the preparation from extract of pyrethrum, Turkey red oil, aromatic substances and emulsifying agents.

It has been found that a much better effect as compared with this last mentioned preparation can be obtained by using as insecticidal substances, oils, such as

Ceylon citronell oil
Patchouli oil
Oil of ocimum viride (mosquito plant)
Oil of blumea lacera
Dwarf pine oil
Oil of callitris propinqua
Borneo camphor oil
Oil of wintergreen
Oil of efwatakala grass
Oil of cloves
Laurel oil

As the effectiveness of the substances which must be effective from a distance, is due to their odor, it must be avoided to reduce or even to eliminate this odor. Consequently, it is necessary to select from these oils those with the most agreeable smell. Furthermore, some of these oils are not on the market in sufficiently large quantities, so that these can be left out of consideration altogether. Therefore the emulsion proposed by the invention contains as effective constituents the following etheric oils.

	Parts
Ceylon citronell oil	10
Dwarf pine oil	3
Oil of wintergreen	1
As emulsifying agent Monopol soap or Turkey red oil as fixative	76
Guaiacum wood oil or colophony	10

If desired wishes as regards odor can be taken into consideration by the additional use of natural or artificial attar of rose or some fashionable scent. The oil solution is produced in the following manner:

First 10 parts of guaiacum wood oil are dissolved in 76 parts of monopol soap (monopol brilliant oil or Turkey red oil), gently heating and stirring the while. When using colophony the same procedure may be employed, but then the insoluble constituents settling on the bottom, must be subsequently removed. It is advisable, however, to dissolve at first the colophony in an equal quantity by weight of trichlor ethylene applying heat at the same time, to then filter or draw off the clear solution floating on top after the insoluble constituents of the colophony have settled and finally to add this clear solution to the monopol soap. By this extraction of the colophony resinous oils are obtained which, like the guaiacum wood oil, make the emulsion very resistant against subsequent washing.

When the solution of monopol soap and resinous oil has been produced, 10 parts of citronell oil, 3 parts of dwarf pine oil and 1 part of oil of wintergreen are added. A light yellow, absolutely clear solution with an agreeable odor is thus obtained.

The textiles are impregnated by producing a luke warm emulsion consisting of 95 parts of water and 5 parts of the above solution. The textiles are steeped in this emulsion, centrifuged without rinsing and dried under moderate heat. It is evident that an emulsion of higher percentage can be made by reducing the quantity of water. The textiles thus impregnated have an agreeable odor lasting for a long time, a soft touch and are favorably affected in the fibre.

PAUL NESTLER.

Published May 11, 1943

Serial No. 278,373

ALIEN PROPERTY CUSTODIAN

PIPE LINE SYSTEMS

Dan Meyer, London N. W. 6, England; vested in the Alien Property Custodian

Application filed June 9, 1939

This invention relates to hollow bodies, such as, tube, pipe lines, containers and the like for conducting and/or receiving etc. fluids under pressure or heated fluids.

In such structures some components, and more particularly the joints which, for instance, in pipe lines, may be flange-, sleeve- or welded joints, also bends, compensators and the like, represent weak points of the structure. The joints must be made so that a reliable packing is ensured in operation and under any conditions. Particular difficulties arise with fluids under high pressure, e. g., in the conducting of very high pressure steam or the like and also where larger pipe diameters are in question. High temperatures which frequently occur at the same time also influence the strength etc. of the material in an unfavourable manner and cause displacements and expansions at the same time.

The difficulties are the more important, since the joints not only serve to provide a packing between the hollow bodies or pipe lines but they serve also to transfer axial forces occurring in the pipes. This is due to the fact that the forces occurring at various points of the pipe lines. e. g. the pressure forces acting upon sluice valves or upon the bends mostly are taken up only at a large distance from the points where they arise, by corresponding reaction forces, e. g., at fixed points. For example, stuffing box compensators with balance are known for the compensation of heat elongations, in which the forces produced by the balancing device have to be conducted for a long distance through the pipe lines proper, since the primary forces which have to be compensated generally arise at a substantial distance from the heat elongation compensators. The matter is similar with respect to bend compensators etc.

The difficulties become very large where the pipe lines, or tubes, in order to prevent their sagging, are additionally held under tensile strain over a large or their entire length. This requires extremely large forces which act upon the whole pipe.

It has been attempted to meet the aforementioned large difficulties, occuring, for instance, with respect to the joints, the flange connections or the like, by a particular construction of the components, such as the flanges, packings, bolts and nuts, and by a particular reinforcement of the welded seams by fish-plates, sleeves and the like; however, the success was small or even the disadvantages of the expensive and inconvenient special constructions preponderated or prevented their application.

The invention is substantially characterised by the feature that means for taking up the axial forces, bending moments and the like are provided immediately at or near the respective points of attack of the forces, so that the hollow body (i. e., for instance, the pipe line) over the greatest part of its length shows no tensions due to these forces or bending moments, and that the components of the pipe, such as joints etc. do not have to take up and to transfer such forces. The above mentioned forces or bending moments may be due to the pressure of the fluid under pressure, for instance, at bending or shut-off points or may be caused by heat effects, e. g., expansions. According to the invention all these forces as far as possible are compensated at the point where they are produced or they are counter-acted at this point. To this end, there may be provided such devices that the axial forces or bending moments due to the pressure and due to the temperature are compensated or balanced by a force or moment which is equal to the resultant of the two forces or bending moments.

It will be understood that due to the said provisions the design of all parts of the pipe line including the joints is substantially facilitated with respect to the stresses to be taken up. In the case of flange joints, the danger of overstressing is substantially reduced and it is possible to use less screw bolts or bolts of a smaller cross section for the same cross sectional stress as in the known cases. Where the joints are made by welding, the stress in the welds is reduced and the danger of the production of cracks and the like is decreased. Safety devices for welded seams are no more required. The stress on flanges is reduced or the same may be made smaller; leakages and disturbances of service are eliminated.

According to a further feature of the invention, points of attack or pressure forces which are not required to be slidable are made as fixed points. On the other hand, points of attack which must be movable are provided with mechanical devices for the positive transfer of counter-forces. Where the primary stresses are due to the pressure of the working fluid, the counter-forces to be produced may be made dependent on the working fluid by direct action of the working fluid or through the agency of another matter, or the working fluid may be used as a control agent.

The balancing forces may be produced as forces of a predetermined magnitude, e. g., in the moment where the loading force has reached a pre-

determined magnitude, or they may be made variable, to increase and decrease with the loading forces. For certain purposes it may be advantageous that an advance or lagging or a difference of the magnitude of the balancing forces with respect to the loading forces is provided, so that, for instance, a tension of a desired amount remains in the pipe line which may serve to counter-act frictional forces or the like.

Annular pistons or plungers or tubular pistons or lentiform members or bellows, as known per se may be provided as means for the balance of the forces produced by the working fluid.

Particular balancing means may be preferably provided on bends if the same are to be yielding, or on resilient compensators for heat expansion. In such compensators the resilient reaction forces and, in the case of the construction of these compensators in a U-shape or lyre-shape, the pressure forces produced at the ends of the compensators can be balanced.

Where the various possible loading forces are taken up at their points of attack, in accordance with the invention, by making such points of attack as fixed points or by the provision of special balancing devices, simple stuffing box type compensators without any balancing device may be used to compensate heat expansions. Such simple stuffing box compensators have the advantage over the so-called balanced compensators that the number of the stuffing boxes is less and partly also they are smaller and, as a result, the frictional forces occurring due to the sliding motion of the inner pipe in the outer pipe of such stuffing box compensators are smaller.

It will thus be clear from the foregoing that it is an important object of the present invention to relieve or balance the pipe line, the various pipe parts and more particularly their joints with respect to stresses, more particularly, tensile stresses. A further object of the invention is to make the relieving or counter-forces larger than the original or primary forces so that an excess of pressure forces is produced in the pipe line. These excessive pressure forces render it possible to make the pipe parts and the joints with still further reduced dimensions of their parts. Advantageously also in this case the counter-forces are made dependent on the primary forces, both as to their magnitude and as to their temporal relation.

Of course, where additional pressure forces are applied, care must be taken that the pipe line is sufficiently safe against buckling. In many instances the free bearing points and the bearing points which are required anyhow are sufficient for this purpose.

Where the application of additional pressure forces, i. e., an over-compensation is desired, it will be advantageous, generally, to provide special balancing devices for the production of over-dimensioned counter-forces in dependence on the primary forces, also at the points of attack of pressure forces which according to the preceding statements are made as fixed points. Thus, for instance, in sluice valves a device for the application of the counter-force may be provided on either side. Such a device preferably consists of a stationary casing surrounding the pipe line and an annular piston which is slidable therein and secured to the pipe line and has a larger cross-section than the interior cross-section of the pipe. In order to prevent the production of any tensile forces also between the balancing devices on both sides, the device on the left hand side of the shut-off valve may be connected to the right hand pipe and the device on the right hand side may be connected to the left hand pipe. Similar devices may also be desirable at the fixed points of systems operating with a simple balance and without over-balance. In this case, the cross-section of the annular piston will be made equal to the inner cross section of the pipe line.

In case of over-compensation the stuffing box compensators, if any, are so formed that the inner pipes are provided with annular pistons and enter into the compensator casing.

The invention will be better understood by reference to the following detailed description in connection with the accompanying drawing showing by way of example and purely schematically some embodiments of the invention, viz—

Fig. 1 is a side elevation, partly in an axial section, of a quarter bend or elbow pipe including an associated balancing device for the positive transmission of a balancing or relieving force.

Fig. 2 is a side elevation of a U-shaped bow including means for the compensation of the reaction forces due to heat expansion.

Fig. 3 is a side elevation, partly in an axial section, of a compenasting device similar to Fig. 2, including an additional device for compensating the pressure forces occurring on the ends of the bow.

Fig. 4 is a side elevation and partial axial section of a quarter bend connected to a vessel and including devices for the compensation of axial forces and bending moments.

Fig. 5 is a fragmentary axial section of a pipe line provided with a bend and a stuffing box compensator and including a device for balancing the pressure force occurring on the bend.

Fig. 6 is a fragmentary axial section of a pipe line including two different types of compensators for heat elongation and means associated therewith for applying additional compressive forces.

Fig. 7 is an axial section of a sluice valve including devices on both sides for the application of balancing or over-balancing forces.

Fig. 8 is an axial section of a bend or angle piece including balancing plungers and

Fig. 9 is a section of a modification of Fig. 8.

Similar reference numerals denote similar parts in the different views.

Referring now to the drawings in greater detail, and first to Fig. 1, it will be seen that the pipe line 2 is acted upon, the direction indicated by the arrow 3, by a force which is produced by the fluid under pressure in the pipe, due to the bend 1 provided in the pipe. A cylinder 4 and piston 5 slidable therein are provided for compensating or balancing this force. The cylinder 4 is mounted stationarily and its rear end is connected, through a pipe 6, with the pipe line, so that the fluid under pressure acts upon the rear face 7 of the piston 5. The latter is connected, through a rod system 8, 9 which may have a slide bar if desired, with a clamping member 10 secured to the upper side of the bend 1.

The cross section of the cylinder corresponds to the interior cross section of the pipe so that the piston 7 is acted upon by the fluid under pressure with a balancing force of the same magnitude as that of the primary force or stress acting upon the inside of the bend in an opposite direction. Hence, said primary force is prevented from producing stresses of the pipe line 2 outside the region defined by the arrow 3 and the clamping member 10.

It may be desirable in case of certain working fluids, e. g., steam or aggressive or corrosive agents, that the cylinder 4 is acted upon by a different fluid which is not hot or not aggressive. To this end, the cylinder may be filled with a stopping or shut-off liquid, such as, condensed water, oil of high resistivity against temperature and the like. The piston 7 may then be provided with a simple collar or stuffing box type packing and the fluid under pressure may act upon the piston through the stopping liquid. Similar indirect action of the working fluid may be effected through the agency of serpentine pipes or cooling serpentines, steam traps, diaphragms or the like.

Referring now to Fig. 2, a U-shaped bow 13 is provided in the pipe 11, 12 for the compensation of heat elongations in the pipe. The pipe 11 is fixedly mounted at 14 and the pipe 12 is fixedly mounted at 15. It will be understood that when a hot working fluid, such as, steam, passes through the pipe, the same expands and the compensating device 12 is compressed. As a result, reaction forces are produced therein which act upon the pipe lines 11 and 12.

In order to balance these reaction forces, each of the two pipes 11 and 12 is provided with a relieving or balancing device consisting of a weight 16 on a lever 17 which is swingable together with a pinion 19, about a stationary pivot 18. A rack 20 which engages the pinion 19 is connected with clamping members 21 mounted on the respective pipe lines. Thus, the left hand weight 16 through the pinion and rack exerts a push or pull upon the pipe line 11, depending on the inclination of the lever 17 which is adjusted in such a manner that the reaction force exerted by the balancing device 13 is compensated to a great extent with respect to its effect upon the pipe 11. In the position of the lever as shown it is assumed that the balancing device 13 has been mounted with a negative bias, i. e. in a spreaded state. Due to this negative bias, the pipe lines 11 and 12 are stressed by the bow 13 already in an inoperative condition and in order to balance this stress, the levers have been arranged in the position as shown. In case of a heat elongation due to rising temperature, the levers will be swung in the direction towards their vertical position and, as they have reached the same, there are no more forces exerted upon the ends of the bow 13 by the weights 16. Advantageously, the parts are adjusted in such a manner that this position is reached when the bow is without tension, i. e., when the negative initial tension or bias is neutralized. With further heat elongation, the levers 17 will be moved into positions where they are oppositely inclined and exert tensile stresses upon the pipe lines for balancing the pressure forces exerted by the bow 13. As a result, the pipes 11 and 12 will not be stressed by the bow as in the case of arrangements without the balancing devices 16—21.

Fig. 3 shows the same arrangement of pipe lines with a U-shaped bow as in Fig. 2, but comprising additional means for balancing the pressure forces produced by the working fluid under pressure due to the bend in the pipes 11, 12. To this end the racks 20 are provided at their free ends with pistons 22 which are slidable in a common cylinder 23, connected, about midway between its ends, and through a pipe line 24, with the pipe 12 so that the pressure existing in the pipe 12 acts directly also between the two pistons 22. Accordingly, the fluid under pressure in the cylinder 23 produces forces in the direction of the arrows 25 and 26, which forces correspond in magnitude to the forces occurring on the bends. As a result, the pipes 11 and 12 are relieved from the axial forces produced by the spring action of the bow 13 as well as from the forces produced by the pressure of the working fluid.

Fig. 4 shows an arrangement in which means are provided for balancing both, the axial forces occurring at the bend 27 of the pipe line 28 and the bending moments occurring due to heat expansion at the point where the pipe line is connected to a vessel 29. The pressure force set up by the action of the fluid pressure upon the bend is balanced by a device similar to that shown in Fig. 1, comprising a cylinder 30 and a piston 31 which is slidable therein and connected, by means of a rod system 32, with a clamping member 33 fixedly secured to the pipe 28 near the bend 27. The rear end of the cylinder 30 communicates with the main pipe 28 through a small tube 34. The clamping member 33 is provided with a downwardly projecting arm 35 acting upon a weight 36 which is slidable in a cross slot formed in two lateral extensions 37, 38 of a vertical arm 39 of a two-armed lever which is swingable about a stationary axis 40. The horizontal arm 41 of the two-armed lever is pivotally connected at 41′ to an arm or stud 42 of a clamping member 43 fixedly mounted on the pipe 28 near the point 44 where the same is connected to the vessel 29.

It will now be clear that the force exerted by the fluid pressure at the bend 27 in the direction of the arrow 45 if the pipe line is under action of a hot fluid under pressure is balanced by a force exerted by the piston 31 in the direction of the arrow 46. The piston 31 acts independently from the heat elongation of the pipe line 28 due to the temperature of the working fluid and due to this heat elongation, a bending moment is produced at 44, in the direction of the arrow 47. This bending moment, however, is also balanced since on displacement of the member 33 and arm 35 to the left due to heat elongation the weight 36 is displaced in the lever arm 39 towards the extension 37, whereby a moment is exerted with respect to the pivot 40 in such a manner that the force exerted upon the arm 42 by the lever arm 41 is downwardly directed and causes a counter-moment in the direction of the arrow 48, oppositely to the arrow 47 which indicates the original moment due to heat expansion. The larger the heat elongation is, the larger is the bending moment exerted in the direction of the arrow 47, but the larger is also the counter-moment exerted in the direction of the arrow 48, whereby a complete balance may be effected under any working conditions.

The extension 38 at the lever arm 39 permits the production of a counter-moment in an opposite direction. This possibility is important where the pipe line 28 is installed in the usual manner with a bias or initial tension with respect to the connecting point 44. In this case the middle position of the weight 36 corresponds to a condition of heat elongation in which the bias is just balanced. As will be understood, it is also possible to provide gears and the like in the system.

Fig. 5 shows an embodiment in which the pressure force exerted at the bend 49 of a line 50 in the direction of the arrow 51 is balanced by a mechanical device rather than by making the bend directly a fixed point of the pipe line sys-

tem. This device consists of a casing 52 which surrounds the pipe line and is stationarily mounted, and an annular piston 53 which is secured to the line 50. Through apertures 54 the fluid under pressure is capable of entering from the pipe line 50 into the casing 52 and to act upon the annular piston 53, thus exerting thereon a force in the direction of the arrow 55 which is opposed to the pressure force 51 acting at the bend. Stuffing boxes 56 and 57 prevent the fluid from escaping through the small annular play between the relatively movable parts. It will be understood that if the effective surface of the annular piston is exactly of the same size as the interior cross section of the pipe line 50, the two forces will exactly balance each other. The pipe line connected to the balancing device is thereby relieved of the tensile stresses produced by the pressure force 51 at the bend.

The pipe 50 of the said balancing device shown in Fig. 5 is connected to a stuffing box compensator which according to the invention may be used for the compensation of the various forces occurring on and in the pipe line immediately at or near their points of attack. As will be seen, the compensator comprises a casing 58 and a pair of stuffing boxes 59 and 60 at both ends, without any additional devices, such as, balancing pistons or the like. The diameter of the packing surfaces does not exceed the diameter of the smooth pipe so that the frictional forces occurring in the stuffing box compensator are smaller than in the case of compensators having additional balancing pistons.

It will be noted that in case of heat expansion, the piston 53 makes relatively small motions only in the stuffing box 57 as long as the heat expansions can be compensated in the compensator 58. In order to prevent the expansion of the pipe from causing an unduly large displacement of the piston in the casing 52 in case of any jamming of the pipe ends in the stuffing box 58, stop collars 56′ and 56″ are provided on the pipe 49 on both sides of the stuffing box 56.

The balancing device 52 shown in Fig. 5 is of a particular importance where it is desired not only to relieve the pipe lines of tensile stresses but even to apply compressive stresses of a predetermined magnitude. In this case the annular pistons of such balancing devices have to be made larger as to their cross-sectional area than the interior cross section of the pipe. In this manner, an over-balance may be produced in the form of an excessive pressure load. The cylinders and pistons shown in Figs. 1, 3 and 4 would also have to be made larger for the purpose of over-balancing than the interior cross-section of the pipe line.

Where an over-balanced state, i. e. a resultant compressive stress is produced in the line, stuffing box type compensators for heat expansion, if any, have also to be provided with additional pistons, as shown, for instance, in Fig. 6. In this case, pipes 61 and 62 which are provided with annular pistons 63 and 64 project into a stuffing box casing 65. The cross sections of the annular pistons 63 and 64 are made larger than the interior cross-sections of the pipes 61 and 62. The two pistons 63 and 64 represent two different forms. The effective area 66 of the annular piston 63 is positioned outside the casing 65, while the corresponding area 67 of the piston 64 is positioned at the inner end of the pipe line 62.

In the left hand part of Fig. 6 there is shown another embodiment of a stuffing box compensator in which the right hand pipe 61 is connected to a tube member 68 while the left hand pipe 69 is connected to a casing 70. The inner pipe 68 is provided with an annular piston 72 which is mounted in a stuffing box 71 and the dimensions of which correspond to those of the aforementioned annular pistons. The operation of this device 68, 70, 71 is similar to that of the device 65 except that the pipe 69 is in this case fixedly supported by the casing 70. On the other hand, it is also possible with any of the aforementioned balancing devices to mount the casing or bearing in such a manner that it is free to slide on its base in an axial direction.

Referring now to Fig. 7, a sluice valve 73 is interposed in a pipe line 74, 74′. If the sluice valve 73 is in its closed position, the fluid pressure acts upon the same in the direction of the arrow 97 and produces a tensile stress in the pipe 74. The balancing means according to the invention may be used not only to balance the tensile stress, but even a pressure force may be produced in the pipe 74. The balancing means comprise casings 75 and 76 and annular pistons 77 and 78 secured to the pipes. The casings 75 and 76 are fixedly mounted on a common base plate 79. The casing 75 on the left hand side is connected, through a tube 80, with the pipe 74′ on the right of the slide valve 73 and the casing 76 on the right is connected, through a tube 81, with the pipe 74 to the left. It will thus be clear that the right hand device 76, 78, will be operated when the pipe 74 is under pressure during the closed position of the slide valve while the left hand device 75, 77 will be operated when the pipe 74′ only is under pressure. As a result, no connecting points of the pipe line, not even the flange joints 82 and 83 of the casing of the sluice valve are stressed by tensile stress. Since the cross section of the annular pistons 77 and 78 in accordance with the above considerations are preferably made larger than the right hand pipe cross section, the pistons 77 and 78 serve to take up a part of the stress of the flange bolts, so that the same may be made smaller accordingly.

Fig. 8 shows an example of a quarter bend in which a plunger 85 which is slidable in a casing 84 and guided in a stuffing box 89 serves for balancing or over-balancing the stresses in the pipe system. The end 86 of the right hand pipe takes the form of a plunger passing through the casing 84 and guided in stuffing boxes 87 and 88. An aperture 90 in the plunger 86 is normally positioned approximately in the middle of the casing 84. The downwardly extending pipe (not shown) is to be connected to the flange 91 of the casing 84. The point 85′ of the plunger 85 is connected, by means of a rope or chain 92, with the point 93 of the plunger 86, and the rope or chain is passed over a roller 94 or the like secured to the casing 84, all as indicated in Fig. 8, purely schematically in dotted lines. It will thus be understood that it is possible to transmit the forces acting upon the plunger 85 upon the plunger 86 and thereby to counter-act the pressure-forces acting upon the end face thereof.

For the purpose of over-compensation the cross-section of the plunger 85 may be made larger than that of the plunger 86. Moreover, it is possible to provide a transmission ratio in the form of a gearing or leverage between the points 85′ and 93, whereby a plunger of any desired dimensions to suit, for instance, any special con-

structional conditions or to reduce the friction in the stuffing box may be attained.

Fig. 9 shows a bend which as to its general arrangement corresponds to that according to Fig. 8. The difference consists in the fact that a bellow-shaped member **95** is provided in place of the plunger **85**. This offers the advantage that a stuffing box and the friction thereby produced are avoided. The rope **92** is secured on or near the end wall **96** of the bellow.

Where it is intended that a resultant pressure stress be produced in the pipe lines, the devices shown in Figs. 2 and 3 for the compensation of the elastic reaction forces of the resilient heat expansion compensator have to be adjusted in a different manner, i. e. in such a manner that the levers **17** in the condition without strain of the compensator **13** have not yet reached their vertical position.

DAN MEYER.

PUBLISHED
MAY 11, 1943.
BY A. P. C.

D. MEYER
PIPE LINE SYSTEMS
Filed June 9, 1939

Serial No.
278,373
2 Sheets-Sheet 1

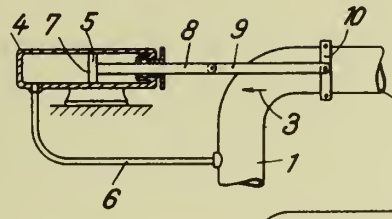

Fig. 1

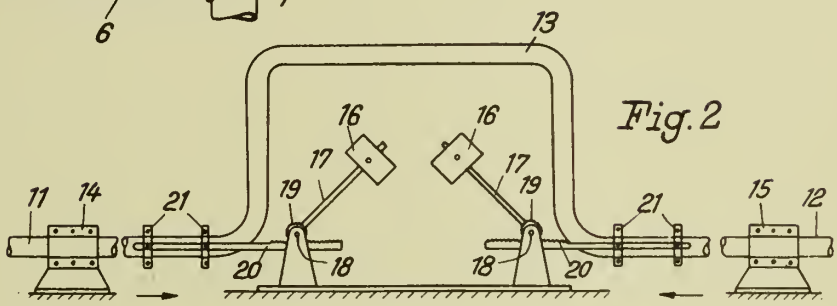

Fig. 2

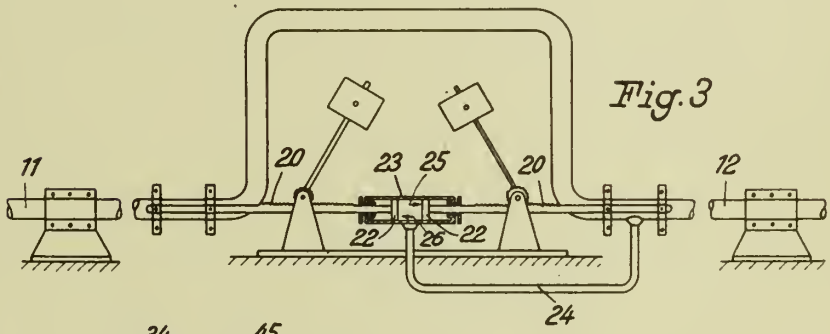

Fig. 3

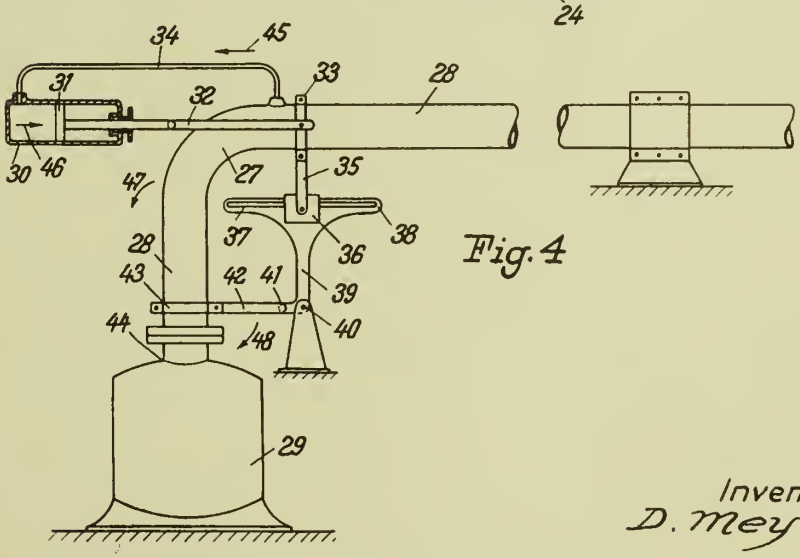

Fig. 4

Inventor:
D. Meyer

By: Glascock Downing & Seebold
Attys.

PUBLISHED
MAY 11, 1943.
BY A. P. C.

D. MEYER
PIPE LINE SYSTEMS
Filed June 9, 1939

Serial No.
278,373
2 Sheets-Sheet 2

Fig. 5

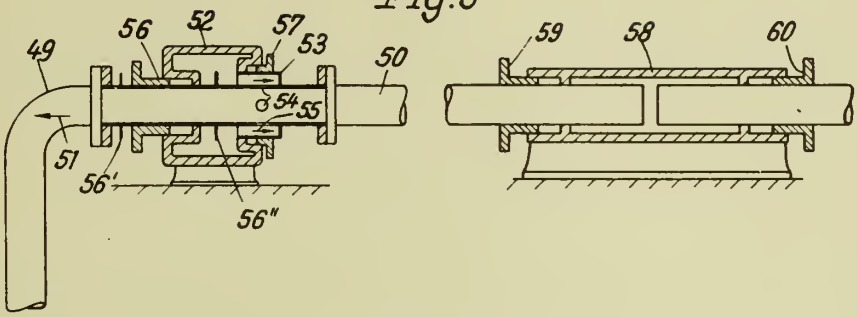

Fig. 6

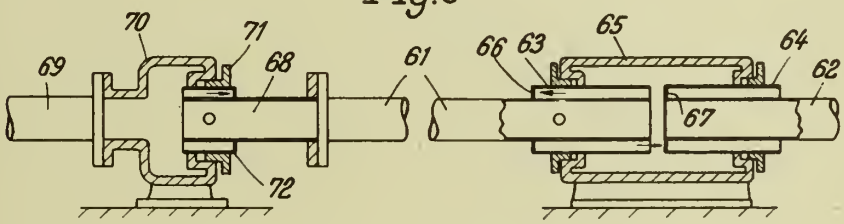

Fig. 7

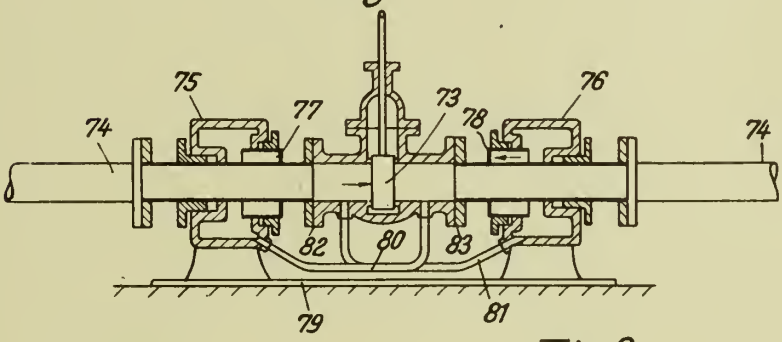

Fig. 8

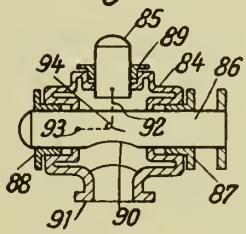

Fig. 9

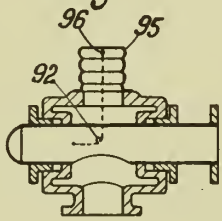

Inventor:
D. Meyer

By: Glascock Downing & Seebold
Attys.

Published May 11, 1943

Serial No. 279,073

ALIEN PROPERTY CUSTODIAN

TOBACCO SPREADER

Richard Erich Rösler, Dresden, Germany; vested in the Alien Property Custodian

Application filed June 14, 1939

The present invention relates to cigar wrapping machines, and more particularly to certain improvements in the tobacco spreader mechanism for feeding the tobacco in loose condition to the tobacco rod mechanism of the machine.

Heretofore in tobacco spreaders the scraper which operates upon the pin roller has been disposed radially with respect to the axis of the roller and comprises a flat plate. It is found in practice that with this construction there is a tendency for the tobacco in the feed hopper to pack or jam against this plate, particularly at its inner edge adjacent the pin roller.

It is an object of the present invention to overcome the disadvantages arising from this construction.

According to the present invention the scraper is disposed angularly over the pin roller with its upper portion overhanging the charge of tobacco in the feed hopper and the inner end of the scraper is provided with a curved lip or spade portion adapted to receive the tobacco entrained by the pin roller and to substantially shear off the charge of tobacco at the outer ends of the pins of the roller so as to provide a desired thin layer of tobacco on the periphery of the roller and also to deflect or guide upwardly and backwardly the excess mass of moving tobacco adjacent the pin roller so that this excess amount of tobacco is kept in motion and caused to fall back from the inclined surface of the plate into the mass or charge of tobacco in the hopper.

Another object of the invention is to provide a construction obtaining these advantages and which may be incorporated in the usual tobacco spreader structure so that the other parts of the apparatus do not have to be rearranged or reconstructed to obtain the advantages of this invention.

With the foregoing and other objects in view, the invention will be more fully described hereinafter.

In the drawing, wherein like symbols refer to like or corresponding parts throughout the several views.

The figure is an end elevation of a tobacco spreader equipped with a scraper mechanism constructed according to the present invention.

Referring now to the drawing, 12 designates the body portion or frame of the machine and in which is disposed a feed hopper having a downwardly looped or curved bottom wall 1, side walls 2 and a rear wall 3 hinged at 4 in the usual manner and connected at its upper end to a crank rod 5. The rod 5 is caused to reciprocate by a suitable gearing 13 to which the rod is connected in the usual manner. The rear wall 3 is thus caused to vibrate and maintain the charge of tobacco in the hopper in loose condition so that it may flow freely into engagement against the peripheral surface of the pin roller 6. Cooperating with the pin roller 6 is a peg roller 7 adapted to take off and fluff the tobacco particles or fibres which are carried upon the pins of the roller 6 and to free the fluffed tobacco so that it may fall or gravitate into the chute 14 which leads to the tobacco rod forming mechanism of the machine. The pin roller 6 is operated by suitable gearing 15 supported in the frame 12 and one of the gears 13 is provided with an eccentric pin 16 to which the link 10 is connected, the link 10 at its other end being pivoted to a yoke 17 to reciprocate the latter. The yoke 17 has its lower end curved and pivotally mounted upon the shaft 8 of the pin roller 6 so that the yoke extends upwardly and backwardly from the roller 6 at an angle to the radius thereof.

The scraper blade 9 is supported to the upper end of the yoke and projects down into the tobacco hopper in substantially the same angular relation as the yoke to the pin roller 6 so that the upper end of the plate 9 is inclined upwardly and backwardly within the hopper so as to overhang the charge of tobacco therein. The lower end of the inclined plate 9 is provided with a rearwardly curved lip 11 providing a combined cutter and guide which terminates at substantially a tangent to the roller 6 and at the outer ends of the pins of the roller. The lip 11 faces rearwardly so as to receive the oncoming tobacco which is carried by the roller 6 to divide the mass of tobacco into a thin film equal substantially to the depth of the pins on the roller 6 which is free to pass beneath the lip 11. The remaining entrained mass of tobacco is carried forward by the turning of the roller 6 and is forced upwardly over the curved lip 11 and against the inclined plate from which the tobacco falls loosely back into the mass of tobacco in the hopper.

The mass of tobacco T is thus kept in loose condition and is also constantly agitated by the vibration of the rear wall 3 and also by the movement of the scraper 9, which forms the front wall of the hopper, and further by the inclination of the scraper 9 which tumbles or rolls the tobacco raised on the lip 11 back into the tobacco mass.

Of course the angle of inclination of the scraper plate 9 may be varied to suit different conditions and forms of the tobacco so as to obtain the desired results. This improved struc-

ture of scraper prevents the clogging of the passage between the scraper and the pin roller and insures the free, even and steady feeding of a layer of the tobacco over the surface of the pin roller to substantially the depth of the pins and quickly and easily removes without appreciable resistance the excess amount of tobacco entrained by the roller and which is of greater height than the pins.

In operation the scraper 9 is reciprocated through the link 10 and yoke 17 of the scraper so that there is a shearing or spade action of the curved lip 11 against the oncoming mass of tobacco carried by the roller 6. The division of the mass of tobacco is thus easily accomplished without undue resistance and there is no danger of the tobacco becoming compacted against the scraper blade and the tobacco is maintained relatively loose within the feed hopper.

It is obvious that various changes and modifications may be made in the details of construction and design of the above specifically described embodiment of this invention without departing from the spirit thereof.

RICHARD ERICH RÖSLER.

PUBLISHED

MAY 11, 1943.

BY A. P. C.

R. E. ROSLER

TOBACCO SPREADER

Filed June 14, 1939

Serial No.
279,073

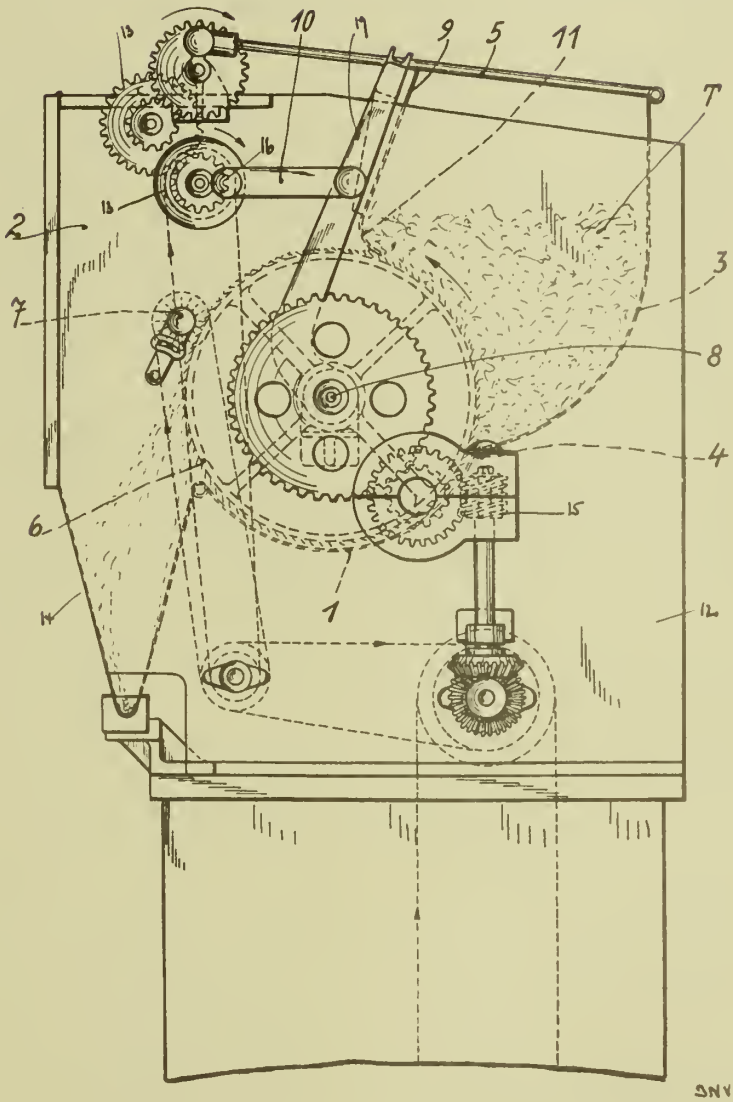

INVENTOR
RICHARD ERICH ROSLER

BY C. A. Jaeger.
ATTORNEY.

Published May 11, 1943

Serial No. 279,187

ALIEN PROPERTY CUSTODIAN

METHOD FOR SURFACE-TREATMENT OF WRITING- AND DRAWING-PENCILS AND OTHER ROD-SHAPED ARTICLES

Georg Loy, Nuremberg, Germany; vested in the Alien Property Custodian

Application filed June 14, 1939

The invention refers to a method for surface-treatment of writing- and drawing-pencils and other rod-shaped articles.

Heretofore writing- and drawing-pencils have been polished with cellulose ester varnishes by the wellknown drawing-through method. For coloured first coat nitrocellulose varnishes have been used in the first line containing as a rule 70–75% easily volatile solvents. Artificial resin has already been added to these varnishes, so-called combination varnishes being produced thereby, in order to obtain well adhering and brilliant surfaces. Also acetyl cellulose varnishes having a content of approximately 80% volatile solvents are being used with the result that particularly hard, highly brilliant film coats are created.

In applying the varnishes, the pencils are pushed through a varnish container in continuous working process. A scraping device enables a fine, film-like covering coat being applied which warrants free drying up to the next working step.

According to their quality the pencils require to be drawn through 5–8 times for primary colouring, 3–4 times for obtaining the brilliant polish. Thus 8–12 working steps are required in all. During this process the volatile solvent which forms a very considerable component of the varnish, is lost completely by evaporation, unless special devices are provided for to recover the substance.

Now it has been found that for the working steps in question substances may be used which are absolutely free from solvent and which allow the method, that is applying colour and brilliancy to the pencils, to be carried into effect by one single passage.

According to the invention instead of the varnishes used heretofore thermoplastic artificial substances or meltable artificial resins are used, if need be, in combinations. The absence of volatile solvents such as are usual with the varnishes applied and required heretofore, is essential.

The drawing illustrates a device by means of which the method can be carried into effect by way of example. A box *a* contains the mass of artificial substance with which the pencils are to be coated. The mass is filled into box *a* through a funnel *c*. The pencil *e* passes through a guiding member *d* into box *a*, gets there into contact on all points with mass *b*, and leaves the box through scraper *f*. At or close to the interior wall of box *a* an electric heating device *h* is provided for.

By means of heating device *h* the mass of artificial substance *b* is melted (at 100 to 150 centigrades) or transformed into plastic condition respectively. Pencil *e* is conducted quickly through the device, receiving thereby a thin smooth coat *g*. The thickness of the coat is determined by the width of the orifice of passage in scraper *f*. In member *d* the pencil *e* is conducted without play. It is convenient to use thermoplastic artificial substances of comparatively great stability of temperature.

As the thermoplastic artificial substances melt more easily under pressure, the method may be developed in such a way that the heated mass of artificial substance is applied to the pencils under pressure of 2–5 atm. at a temperature of approximately 150 centigrades. In this case the drawing-through device is also provided with an electric heated pressure cylinder in which in a similar manner to a screw-press a piston is moved mechanically.

Of the thermoplastic artificial substances such are used as possess sufficient hardness and good adhesive property to wood e. g. vinyl ester polymerisates, urea aldehyde condensates, polymerised vinyl acetate etc. For dyeing these masses all dyes stable up to a temperature of about 150 centigrades may be used, also together with other filling materials such as lenzine, heavy spar, titanic acid anhydride etc.

In the spirit of the invention also meltable artificial resins of great stability of temperature may be used e. g. phenol formaldehyde resin, if need be combined with other non-volatile substances such as phtalate plus softening agent (e. g. oil) suitable to increase the capacity of adhering to wood and free the resin from brittleness.

Also artificial resins capable of being hardened may be used e. g. such of the type of the resolesphenol resin the hardening of which may be effected in a short time.

GEORG LOY.

PUBLISHED

MAY 11, 1943.

BY A. P. C.

G. LOY

METHOD FOR SURFACE-TREATMENT OF WRITING- AND DRAWING-PENCILS AND OTHER ROD-SHAPED ARTICLES

Filed June 14, 1939

Serial No. 279,187

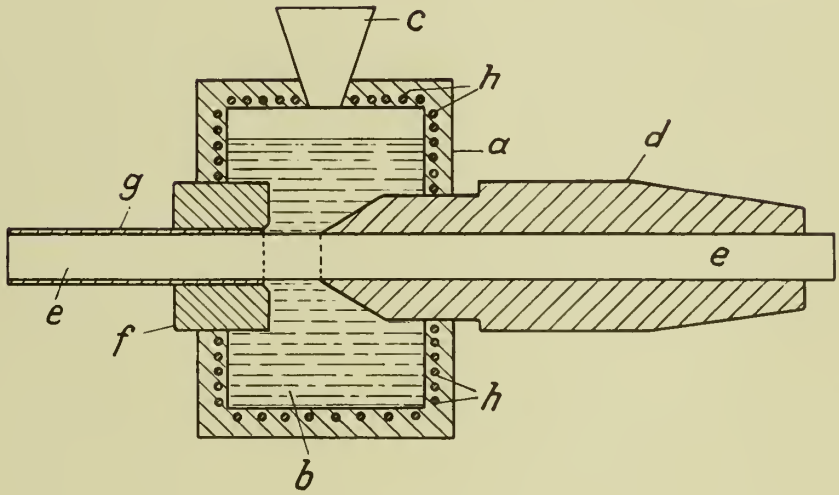

Inventor:
Georg Loy
By
Young, Emery & Thompson
Attorneys

Published May 11, 1943 Serial No. 281,413

ALIEN PROPERTY CUSTODIAN

ICE-BAGS AND HOT-WATER-BOTTLES

Luis S. Rebano, Tanauan, P. I., vested in the Alien Property Custodian

Application filed June 27, 1939

This invention relates to ice-caps or ice-bags and hot-water-bags or hot-water bottles. Its objects will appear from time to time in the course of the specification.

The primary object of this invention is the provision of a Rebano bag of this character, wherein pieces of ice or cool water is contained and covered and used for the treatment of headache, stomachache, chest pain, abdominal pain, swelling, high temperature, and other human ailments,—this Rebano bag having two waste-rubber tubes or tubings attached to each side of the bag proper which continuously drain the waste melted water therefrom into the receptacles attached to each lower end of the tubings—the bag proper, tubings, receptacles, tube clamps for clamping when necessary, the links for connecting and disconnecting which allow any number of assorted lengths of tubings for the needed length, pieces of ice or cool water, and all, in cooperation with one another, give gradual corresponding decrease in the device weight during the melting of the ice and treatment, and therefore, greater relief and comfort to the patient or user.

Another object of this invention is the provision of a Rebano bag of this character, having two rubber tubings attached to each side of the bag proper, through which the hot water passes in filling the receptacles attached to each lower end of the waste-rubber tubings—the bag proper, tubings, receptacles, tube clamps for clamping when necessary, the links for connecting and disconnecting which allow any number of assorted lengths of tubings for the needed length, hot water, and all, in cooperation with one another, are used as hot-water-bags or hot-water-bottles, wherein hot water, through its protected mouth, was first contained and covered, and this Rebano bag is used for treatment of stomachache, as compress for swelling, to give warmth to cool weak body, and for throat diseases when applied to the neck, etc.

A further object of this invention is the provision of a Rebano bag of this character, wherein two waste tubes or rubber tubings formed of assorted lengths are attached to each side of the bag proper which will continuously drain the waste melted water into the rubberized cushion-shaped receptacle, thereby decrease gradually, correspondingly the weight of the bag on the patient's forehead, and give increasing relief and comfort to the patient, and as no melted water stays or is left inside the bag proper, the remaining pieces of ice in its natural process of melting, melts slowly, rather, slower than if enhanced by the stay, if undrained, of the warming melted water inside the bag proper, which, likewise, gives vast saving of ice or means.

A further object of this invention is the provision of a Rebano bag of this character, which is simple in construction, thoroughly reliable and efficient in its operation, readily and easily contained or filled and emptied, economical, durable, inexpensive to manufacture, and gives greater relief and comfort to the user.

With these and other objects in view, this invention consists in the features of construction, combination and arrangement of parts as will be hereinafter more fully described, illustrated in the accompanying drawings, which disclose the preferred embodiment of the invention and pointed out in the claims hereunto appended.

This invention is more or less diagrammatically illustrated in the accompanying drawings wherein:

Figure 1 is a more or less diagrammatic perspective of the entire Rebano bag constructed in accordance with the invention, showing top view of the bag proper, its mouth, mouth-cover or screw stopper with which the mouth is covered. It also shows waste tubes or rubber tubings, receptacles, tube clamps, metal links, ears, strings as fasteners, and covers of receptacles.

Figures 2A and B are more or less diagrammatic views showing the following: A shows the Rebano bag containing pieces of ice applied on patient's aching head, the waste-tubes hanging freely, and the recetpacles on the bed without bearing weight on the forehead. B shows the bag proper and the receptacles used separately as hot-water-bags applied on aching stomach, and sides, to keep the cool, weak, operated body warm.

Figure 3 is a diagrammatic representation showing the cover, ear, and string of a receptacle.

Figure 4 is a half-section view of the entire Rebano bag showing pieces of ice and waste melted water. It also shows the principles used in the mouth and receptacles for opening and closing, and for connecting and disconnecting the tubes **3***a*, **3**, **3***b*, and **8**.

Figure 5 is a side view of the bag proper.

Similar reference characters indicate corresponding parts throughout the several views in the drawings.

Referring to the drawings in detail, **1** is the bag proper, **2** is the mouth, **2***a* is the mouth-cover or screw-stopper and string, **3** is a waste-tube or rubber tubing, **3***a* is a point of tubing attachment to that side of the bag proper, **4**

shows the ears of the bag proper, **5** shows one of tubing links, **6** is one of the two receptacles, **7** is a recetpacle cover, **7***a* is string and ear of the receptacle, **8** shows one link of the tubing to the receptacle, **9** shows the tube clamps, **10** is the rubberized mouth-protector of the bag proper when pouring hot water, **2***a* is also the string and ear of the mouth-protector, **11** shows pieces of ice, **11***a* shows waste melted water.

As in opening the hospital rubber ice-caps, the cylindrical mouth of this rubberized Rebano bag which is made of metal, rubber, or wood grooved spirally, is opened by twisting the cover **2***a* to the left several times. Once enough pieces of ice is placed in the ice chamber of this oval, cushion-shaped bag proper, below its neck is pressed around closed by the thumb and first finger of the left palm to exclude air, and cover again ready for use. This bag proper is placed flatwise and lengthwise between the temples on the patient's forehead as shown in Figure 2A if headache is the complaint, etc.

The natural tendency of the ice is to melt, and with the ice-caps in common use, the weight remains about the same on the patient's forehead even if the pieces of ice inside the bag is melting or all melted; and yet worse, for the melted thing or water as getting warm inside, increases the melting of the ice even faster than if pieces of ice alone are left in the ice-chamber of the bag proper.

While placed on the forhead as shown in Figure 2A and the ice inside the bag-proper chamber begins to melt, this device has two rubber tubings or waste-tubes **3** attached to each side of the bag which will continuously drain the melted water into the rubberized cushion-shaped receptacles **6**, and will in effect, continuously, gradually lessen the weight of this bag on the patient's forehead. As no melted water will be left inside the bag proper, the remaining pieces of ice in the ice-chamber, in the process of melting, melts slowly, rather slower than if enhanced by the stay of melted water therein. If each receptacle **6** becomes filled with waste melted water from the chamber, the waste-water is emptied into a basin through its end **7** being just opened, then closed again. The rubber ears **4** attached to the bag, are for hanging after use. The connecting links **5** allow any number of assorted rubber tubings for the needed length that the receptacles will rest on any part of the bed desired, bearing no unnecessary weight on the head.

The bag proper alone is also used as any hot-water-bag in common use in hospitals by clamping first the tubings with **9**, separating it from the receptacles as in Figure 2B, pouring hot water into the bag-proper chamber, closing same with air excluded, and applying on the abdomen if stomachache is the complaint, etc. But when more hot-water-bags are needed, the oval, cushion-shaped receptacles **6** are filled also with hot water through the opened mouth and chamber of the bag proper with the clamps first removed from the tubings, then applied back once the bag and receptacles are filled with hot water, then separating the three bags by detaching each from their links. These are applied separately to the feet and sides of patient after operation when necessary. The rubberized ear and string **7** and **7***a*, ties the cover **7** to the **7***a* to prevent loss of cover. The steel clamps **9**, with which when both-side tubings are clamped, keep the hot water in the bag proper from flowing down the tubings into the receptacles; and the bag and receptacles can even be taken and used separately by simply applying the clamps to the respective bag tubings to prevent water flow.

The tubing **3** in Figure 1, is connected to that part of the bag proper **3***a* by joining the links or turning tubing **3** upper end to **3***a*; likewise tubing **3***b* upper end to tubing **3** lower end; etc., and when connected, they must be water and air-tight. For both ends of every two tubings to be connected, apply the principle used in Nos. **2** and **7**, in Figure 4; and the same principle for each receptacle to tubing.

After use, and the ear **4** hangs the Rebano bag, readying for its safe-keeping, the cover **7** is opened that every drop of water in the interiors of the bag proper, tubings, and receptacles, will drop out; then they be strewn with powder to keep them in good condition.

Though this invention is preferably fabricated from rubber, I do not desire to limit my invention to the use of this one material and it is to be understood that many similar materials might be used in the manner here described.

LUIS S. REBANO.

PUBLISHED

MAY 11, 1943.

BY A. P. C.

L. S. REBANO

ICE-BAGS AND HOT-WATER-BOTTLES

Filed June 27, 1939

Serial No. 281,413

2 Sheets-Sheet 1

Fig. 1

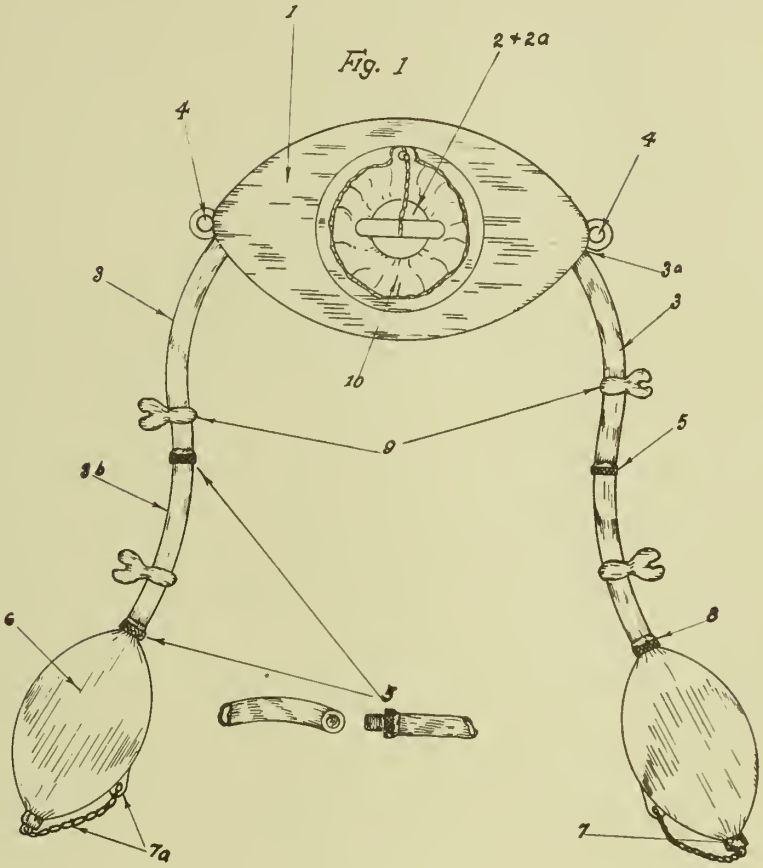

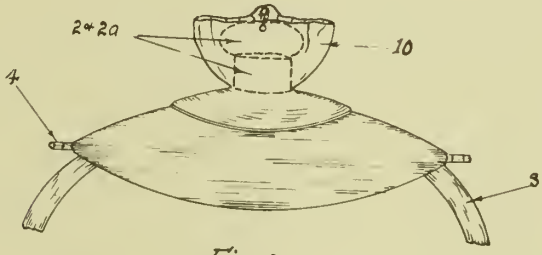

Fig. 5

Witnesses.
Maria S Rebano
Beatrice Copino

Lieutenant Luis S Rebano
inventor

PUBLISHED
MAY 11, 1943.
BY A. P. C.

L. S. REBANO
ICE-BAGS AND HOT-WATER-BOTTLES
Filed June 27, 1939

Serial No.
281,413
2 Sheets-Sheet 2

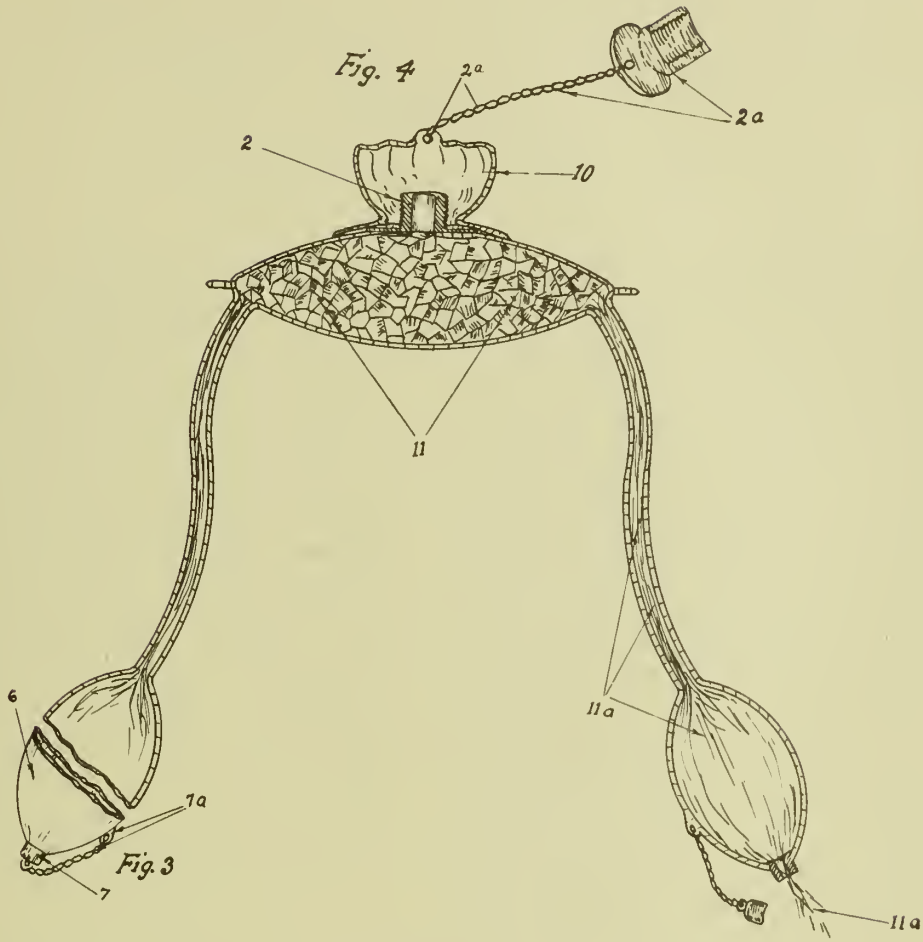

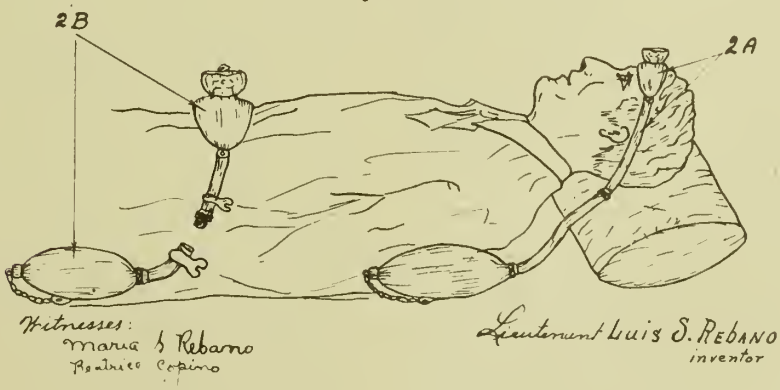

Published May 11, 1943

Serial No. 281,683

ALIEN PROPERTY CUSTODIAN

PRODUCTION OF DISINFECTANTS AND PEST EXTERMINATING AGENTS

Karl Wilhelm Rosenmund, Kiel, Germany; vested in the Alien Property Custodian

No Drawing. Application filed June 28, 1939

This invention relates to the production of disinfectants and pest exterminating agents on the basis of aromatic hydroxyl compounds.

It is known that compositions of phenolic character, such as substituted phenols, naphthols, oxydiphenylmethanes and the substitution products of such compounds, possess excellent disinfecting power which, however, cannot be fully utilized for the reason that they are insoluble or very slightly soluble in water. It has been proposed to effect a solution of such compounds with the aid of dissolving partners like salts of the salicylic and cresotic acids and others, and particularly fatty acid and resin soaps. These soaps possess not only a great carrying capacity for many phenols but also great capillary activity and good wetting-out power and therefore also high penetrativity. Unfortunately, it was found out, however, that all such systems, especially if they show an alkaline reaction, tend to reduce the efficacy of the phenols, in consequence whereof the action of the agents on parasites is considerably weakened.

The invention proposes to use as dissolving aids or dispersion agents the salts of secondary phosphoric acid esters of the general formula

$$\begin{array}{l} Ph—O— \\ \qquad\qquad PO—OMe \\ Ph'—O— \end{array}$$

in which Ph and Ph' indicate a phenol, naphthol, oxydiphenylmethane or their substituted derivatives, above all their halogen-substituted derivatives, and Me stands for an alkaline metal or a nitrogenous base like ammonium, triethanolamine, etc. Aromatic hydroxyl compounds of this kind are briefly referred to below as "phenols."

Such bisphenolphosphates are capable not only of dispersing phenols or even of acting as dissolving partners to keep them in solution but are also active in lowering surface tension and in aqueous solution possess considerable wetting-out power. Above all, however, they have per se a remarkable bactericidal and fungicidal as well as a high disinfecting and pest destroying effect. Combined with phenols, they act as dissolving aids and dispersion agents and not only do not reduce the effectiveness of the phenols but positively increase it, frequently to such a point that the effects are potentiated and are overadditive.

A number of useful components are mentioned below without intending to restrict the invention to them.

Phenols within the meaning of the invention which are dispersed or colloidally dissolved but which may serve also for building up bisphenolphosphates are for instance phenol, naphthol, oxydiphenylmethane and oxyquinoline and particularly the substitution products of these phenols, as cresols, xylenes, thymol, carvacrol, substituted naphthols and oxydiphenylmethane like benzylcresol and others. Particularly suitable appear to be combinations in which at least one constituent (dispersing medium or dispersed phenol) contains as a minimum a halophenol like chlorophenols, bromophenols, di- and trichlorophenols, chloronaphthols, chlorooxydiphenylmethanes like benzylchlorophenols and dichlorophenolmethanes and, above all, the extraordinarily effective substituted, i. e. alkylated, halophenols, such as chlorocresols, chlorothymol, chloroisothymol, benzylchlorocresol, etc.

When these phenols are to be used as dispersing media or dissolving aids in the form of bisphenolphosphates, they are converted by means of phosphoric acid or its derivatives, the chlorides or esters. Conversion can be effected in known manner, and the surprising fact discovered is that even the more complex alkyl halide phenols can be smoothly converted into the corresponding bisphenolphosphates. It is further possible to produce first monophenolphosphates in known manner and subsequently convert them into bisphenolphosphates so as to have an opportunity of incorporating therein different phenols, or to build up first the triphenolphosphates and to saponify them later on in suitable manner to form bisphenolphosphates, which may be effected by the action of saponifying acids and, above all, through saponifying bases. The following examples recite by way of explanation some of the methods of production without, however, restricting the invention to the disclosures made.

Example 1

From chlorothymol (excess) and phosphorus oxychloride, possibly with the addition of a diluent like nitrobenzene, xylene, etc., trichlorothymolphosphate is produced in known manner, possibly while adding a catalyst like aluminum chloride, iron chloride, zinc chloride, or the like. This compound may be produced also with the aid of sodium chlorothymol or by converting chlorothymol in alkaline aqueous or aqueous acetonic solution with phosphorous oxychloride or even from phosphoric acid by conversion with chlorothymol or from an ester of phosphoric acid, possibly the triethylester, by conversion with chlorothymol.

$^1/_{20}$th mol trichlorothymolphosphate, melting

point 84°, is dissolved in alcohol and after addition of 1/20th mol. potassium hydroxide heated at boiling point for 10 hours. The alcohol is then evaporated, the residue taken up in water and the solution freed from split off chlorothymol. The bischlorothymolphosphate of potassium can be obtained from the solution by salting out with potassium carbonate. The free acid can be obtained by acidulating the salt solution by means of hydrochloric acid, extracting the bischlorothymolphosphoric acid with ether and recrystallizing the isolated acid from petroleum ether mixtures; it has a melting point of 134°.

To the sodium or potassium salt of this acid a phenol can be added to the easily ascertainable extent of the carrying capacity of a solution of these salts in water. Preferably, chlorothymol is used while equimolecular quantities are brought into solution and filtered off from smaller quantities of undissolved matter. The solution or dispersion may be produced also by retaining the amount of chlorothymol obtained during the preparation of the compound instead of separating it, this being probably the simplest manner of producing mixtures according to the invention.

Example 2

30 g. 5-chlorocarvacrol and 15 g. phosphorous oxychloride are slowly heated to 130° C. and kept at this temperature for 3 hours. The contents of the vessel are then subjected to fractional distillation, and the monochlorocarvacrolphosphoric-dichloride is then converted at a vacuum of 0.6 mm. at 123° to 125° C. and the bischlorocarvacrolphosphoric-monochloride at 190° to 192° C. The yield of dichloride amounts to approximately 5 g. and that of monochloride to about 24 g. The dichloride can be converted again into a bisphenol compound with the aid of chlorocarvacrol or another phenol, and the monochloride is decomposed with water to form a free acid. The sodium salt is soluble in ether.

To a solution of sodium or ammonium salt in ether is added approximately the semimolar amount of 4-chlorophenol or chlorothymol, whereupon the mixture is heated for some time and then evaporated to dryness. The residue is an excellent disinfectant.

Example 3

100 parts by weight bischlorothymolphosphate of potassium, 50 parts by weight commercial p-chloro-m-cresol and 100 parts by weight ethanol are dissolved in one another while being slightly heated. A 1:200 dilution in water kills suspensions of bact. coli. com. in about 10 minutes, a 1:1000 dilution kills instantly staphyloc. aureus and a 1:4000 dilution immediately destroys suspensions of streptococci. Even ground spores are instantly killed by a 1:400 dilution and after 5 to 10 minutes by a 1:1000 solution. The solutions of the disinfectants in water prove to be typical colloidal solutions of excellent stability. Separation might happen with salts causing hardness of water, which may be prevented, however, by the addition of known substances like sodium tetrametaphosphate and similar isopolyphosphates, Turkey-red oil, sodium octadecenoylmethylaminoethanesulfonate, sodium dodecanolsulfate, etc.

Example 4

100 parts by weight potassium bischloroisothymolphosphate and 20 parts by weight commercial chlorothymol are together dissolved in ether and separated again as mixture by rapid evaporation of the ether. This mixture is dried in the vacuum. An aqeuous solution of the mixture applied to vegetable germs show about the same effect as the preparation of Example 3. The effect upon spores was even considerably greater in spite of a smaller content of free phenol.

Example 5

100 parts by weight ammonium bis-p-chlorophenolphosphate or triethanolamine and 20 parts by weight 2,4-dichlorophenol are thoroughly triturated, whereupon enough ethanol is added to give a clear solution. The action of an aqueous solution obtained by dilution is only slightly less than that of Example 3.

If technical cresol mixtures serve for conversion into bisphenolphosphates which are used as carriers for such cresol mixtures or other phenol, the mixtures obtained will not be fully equal in effectiveness to those mentioned above but will be very cheap. Monophenolphosphates appearing during production need not be separated, as they do not cause any trouble but on the contrary add to the general effect. As stated before, the simplest procedure is to convert the phenols only partly into bisphenolphosphate and to use this, possibly together with monophenolphosphates that have appeared, as dispersion agent or dissolving aid for the non-phosphorylated portion of the phenols. The possibility of produring mixed bisphenolphosphates from different phenol components and using them has been mentioned already. For example, from oxydiphenyletherphosphatedichloride and chlorothymol in presence of pyridine a mixed bisphenolphosphatemonochloride was obtained from which the highly active salt can be produced.

Example 6

10 parts by weight potassium bischloroisothymolphosphate and 2 g. (1) chlorine (2) naphthol or 2 g. oxydiphenylmethane are dissolved in 12 parts by weight alcohol. The resulting solution has a strong bactericidal effect.

KARL WILHELM ROSENMUND.

Published May 11, 1943

Serial No. 281,738

ALIEN PROPERTY CUSTODIAN

METHOD FOR THE PROVIDING A PERMANENT LAYER ON LEATHER AND THE LIKE

Ferdinand Moog and Bruno Schlensog, Francfort-on-Main, Germany; vested in the Alien Property Custodian

No Drawing. Application filed June 28, 1939

Our invention relates to a method for the providing a permanent layer giving a shining or glistening effect on leather, leather-like materials and other elastic materials, particularly textiles.

The purpose of the invention is to provide on the visible surface of such materials in their employment for the production of articles in daily use, a special effect giving an increased glistening or shining property thereto, in addition to the normal properties of such materials, which will be further increased in artifical light.

According to the invention the improved method is as follows:—A very thin layer of lacquer is provided on the surface of the material, if necessary, after the application and drying of an aniline dye or lac dye, and before the complete drying of this layer, that is, whilst it is still in a tacky condition, the actual layer giving the glistening or shining effect is applied by spraying or blowing thereon metal foil in the form of flakes or grains of any desired colour, the glistening layer then being fixed and rendered smooth by rolling or pressing and finally securely fixed by a colourless covering layer of lacquer.

The method for applying a permanent glistening layer will now be described with reference to its application to leather.

Leather, which has been tanned in any suitable manner either by a vegetable tanning, chrome tanning, or combined tanning, either receives its ground colour or a different ground colour is obtained by applying colour thereto preferably in the form of aniline or lac dyes. After the drying of the applied colour—if used— according to the invention, a very thin layer of lacquer is provided on the surface of the leather, this layer having no effect on the elastic property of the material. When the thin layer of lacquer has not quite completely dried, that is, whilst it is still in a tacky condition, it is ready to receive the actual layer which provides the glistening or shining appearance and which consists of metal foil in the form or flakes or fine grains of any desired colour. This glistening or shining layer is preferably applied by spraying on or blowing on the particles. A permanent fixing and smoothing is then effected by rolling or pressing and finally the layer of glistening particles is firmly embedded by means of an application of a thin covering layer of colourless lacquer.

If leather-like material or other elastic material, such as for example textile material, is employed instead of leather for the treatment according to the invention, the tanning operation, which is required in the case of leather, is naturally omitted.

FERDINAND MOOG.
BRUNO SCHLENSOG.

Published May 11, 1943

Serial No. 282,296

ALIEN PROPERTY CUSTODIAN

DRY CELL

Erich Marhenkel, Berlin-Sudende, Germany;
vested in the Alien Property Custodian

Application filed June 30, 1939

This invention relates to a dry cell and to an improved method of producing dry cells.

It is an object of the present invention to provide a dry cell which is adapted to supply a relatively large quantity of current during a long period of time while being relatively small in size.

A special object of the invention is to provide means by which the surface effect of the depolarising electrode is enhanced.

With these and further objects in view which will be apparent from the within disclosures, the invention comprises not only the structures herein pointed out and illustrated, but includes further structures coming within the scope of what hereinafter may be claimed.

The character of the invention, however, may be best understood by reference to certain of its structural forms, as illustrated by the accompanying drawing in which—

Fig. 1 is a cross sectional view of a dry cell having the invention applied thereto;

Fig. 2 is a plan view of the same element and

Fig. 3 is a bottom view thereof.

In the known dry cells of the Leclanché type having a depolarisator consisting substantially of manganese dioxide the depolarisation due to the impregnation of the electrode with the electrolyte takes place not only at the surface but also, from the beginning of the discharge, in the interior of the positive electrode or of the depolarisator, respectively. On the contrary, the elements in which the atmospheric oxygen effects the depolarisation which elements have more recently become known and are sometimes referred to as "atmospheric oxygen cells" operate only with a surface depolarisation effect; for, if the depolarising layers would be impregnated with the electrolyte liquid, the atmospheric oxygen would not be admitted and the element after a short time of operation would become unable to supply current.

Since in the elements of the atmospheric oxygen type the depolarising agent, i. e., the atmospheric oxygen, is available in practically unlimited quantities, it should be expected, theoretically, that these elements show a considerably larger output than elements of the manganese dioxide type.

However, hitherto it has not been possible to produce dry cells of the atmospheric oxygen type, more particularly, small size cells, for instance, for normal pocket lamp, which would produce at least approximately the output of the usual pocket lamp cells having a manganese dioxide depolarisator.

I have found that this unsatisfactory output of the elements of the atmospheric oxygen type is due to the fact that the surface layers of the atmospheric oxygen electrode which are covered by the electrolyte due to the generation of current in the element become inactive very soon so that the deeper positioned layers thereof cannot act any more.

According to the present invention the said deleterious effect is avoided or compensated in this manner that the electrolytic paste adhering to the electrode which is being dissolved due to the discharge of the element, i. e. generally the zinc electrode, is caused to come into intimate contact with the deeper positioned depolarising layers which are still effective, by the application of pressure during the discharge of the element, in the same degree as the superficial layers of the depolarising substance become ineffective.

The application of pressure may be effected in various manners, for instance, by hand operation, for example, by means of a set screw acting upon the zinc electrode, or automatically, for example, by encasing the electrolytic paste in such a manner that the normal expansion of the electrolyte due to the discharge produces the required pressure, by spring pressure or similar means.

Referring to the drawings in greater detail, it will be noted that the cell comprises a substantially rectangular casing or container B which may consist of artificial resin products. Advantageously the said casing consists of two parts B′ and B″ which are held together by screws or rivets C passing through flanges A or by any other suitable means. The lower wall of the casing is apertured as shown best in Fig. 3 while the upper wall thereof is provided with two rows of perforations L, for the admission of atmospheric oxygen. The carbon electrode is formed of a cylindrical disc K having a projection which extends through a central bore of the casing B and carries a metal cap M forming the positive terminal. A flat metal trough or cup Z extending across the lower aperture of the casing forms the second electrode which is being dissolved in the operation of the element and consists more particularly of zinc. Provided on the inner surface of the zinc trough is the electrolyte paste E and the space between said electrolyte and the carbon electrode is filled up completely by a further substance D forming the depolarisator. Insulating strips I extending around the side walls of the container and engaging the end faces of the bent up edges of the zinc trough serve to

separate the depolarisator from the zinc electrode.

Various compositions may be used for the electrolyte and for the depolarising mass, but by way of example the following compositions may be stated hereunder which have been found to be very useful in connection with my novel dry cell, viz—

Electrolyte.—100 kgs water, 30 kgs ammonium chloride, 10 kgs zinc chloride. In order to produce the electrolyte paste about 30 grams wheat flour are added per 100 ccms of the said electrolyte mass.

Depolariser mass.—40 kgs active carbon, 10 kgs graphite, 10 kgs ammonium chloride.

In the manufacturing process of the said element the following points must be considered. The atmospheric oxygen electrodes of the known type are either permeable for gas, but impermeable or nearly impermeable for the electrolytic liquid, by the addition of water-repelling substances to the depolarising mass or by a cover which has water-repelling features or forms a hindrance for the access of water. This, however, causes an increase of the inner electric resistance of the element. On the other hand, if the depolarising electrode is used without such a substance or casing hampering the access of the electrolyte, then the electrolyte which according to the known process is introduced into the element in a non-gelatinized state already after a short time causes a substantial impregnation of the atmospheric oxygen depolarising layer, and, as a result, an insufficient electric output of the element is obtained. On the other hand, if the electrolyte is introduced in the form of a finished paste, there would be the drawback that the inclusions of air at the dissolving metallic electrode which are unavoidable in this case produce a corrosive effect that impairs the duration of life or storing properties of the element.

According to a feature of the present invention the aforementioned drawback may be eliminated in this manner that the dissolving electrode is covered with the electrolyte paste before the assemblage of the element and thereafter urged against the depolarising electrode and held in this position. The electrolyte is advantageously applied on the dissolving electrode in this manner that the electrolytic liquid which, for instance has been admixed with flour, is poured onto the electrode and then converted into the gel-state, by a short heating. In this case it is not necessary to provide a substance or envelope for protecting the atmospheric oxygen electrode against the access of the electrolyte.

It will be understood from the foregoing that due to the encasing of the electrolyte paste as shown in Fig. 1 the expansion of the electrolyte which normally occurs with such elements during operation thereof will cause a pressure of the electrolyte paste with respect to the deeper seated depolarising layers. Of course, a similar expansion occurs in the known elements. However, in the known dry cells of the Leclanché type, having, for instance, a zinc cup the upper wall of which is inwardly bent over a card board disc in order to form a packing to prevent escaping of the electrolyte, a hollow space is left between the positive electrode and the card board disc, to permit expansion of the electrolyte. Therefore, during the discharge of the element, the electrolyte expands into the free space provided for the expansion but does not enter into the depolariser electrode which is tightly wrapped and laced up and for the rest has been normally impregnated with the electrolyte already in the course of manufacture of the element.

It has been found that dry cells for pocket lamps operating with atmospheric oxygen depolarisation and made in accordance with the present invention show an increase of output of more than 50% compared to the conventional batteries having a manganese dioxide depolariser.

While the structural expansion of the electrolyte will be normally sufficient to produce the desired effect, it is also possible to provide additionally, or alternatively, hand operated means for producing a mechanical pressure. By way of example, a set screw S having a knurled head may be threaded in a rib R of the container part B'', as indicated in Figs. 1 and 3 in dotted lines. As will be understood, by rotation of the screw S in a clockwise direction the zinc electrode is inwardly bulged out and urges the electrolyte mass E into a more intimate contact with the depolariser D. The set screw S may form the negative terminal of the cell at the same time.

I wish to make it clear that my invention is not restricted to the use of atmospheric oxygen elements the depolarising electrode of which contains active carbon and/or other oxygen transmitters, such as, indigo white, cerium salts and the like. The advantages hereinbefore mentioned will always be obtained in connection with surface depolarisation, and depolarising substances like perborate, persulfate etc. which when applied in the form of a solution would not be sufficiently stable or would have a strong corrosive effect on the dissolving electrode, may be used without difficulties in my novel dry cell, since the said substances can be embodied in the depolarisator mass in a solid form.

I am aware that many further changes may be made and numerous details of construction and composition may be varied through a wide range without departing from the principles of this invention.

ERICH MARHENKEL.

PUBLISHED
MAY 11, 1943.
BY A. P. C.

E. MARHENKEL
DRY CELL
Filed June 30, 1939

Serial No.
282,296

Fig. 1

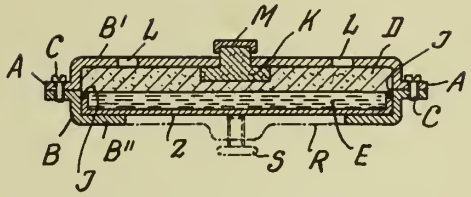

Fig. 2

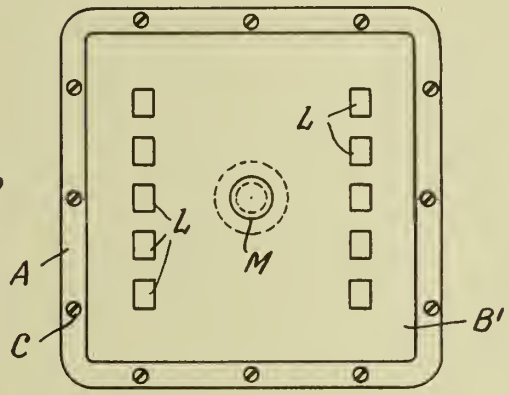

Fig. 3

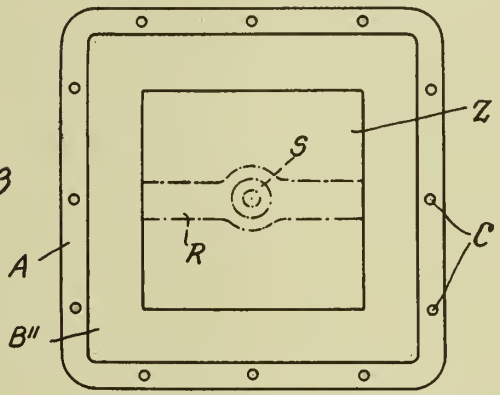

Inventor,
E. Marhenkel

By: Glascock Downing & Seebold
Attys.

Published May 11, 1943

Serial No. 283,225

ALIEN PROPERTY CUSTODIAN

DENTAL CEMENT COMPOSITION

Bruno Schmidl, Berlin NO 43, Germany; vested in the Alien Property Custodian

No Drawing. Application filed July 7, 1939

This invention relates to dental cements for filling cavities in teeth and more particularly to dental cements of the silicate and metal oxide type employing phosphoric acid as binding liquid and a method of making the same.

It is known that pretreated silicates, for instance, aluminum silicates, or certain metal oxides, for instance, zinc oxide, have the property on mixing with phosphoric acid so as to form a plastic paste, to set in a short time to a solid hard mass. Upon this reaction there is based the manufacture of dental cements, and various suggestions and patents have for their objects the selection of a proper relation between both components, i. e. between the cement powder and the binding liquid, the phosphoric acid. This relation has been adhered to quite strongly in literature as well as in practical use. It has, however, a number of essential disadvantages of which there may be mentioned the following: In physico-chemical respect the properties of the set cement depend to a great extent upon the optimal proportion between the cement powder and the phosphoric acid, i. e. in practice upon the accidental manner of mixing more or less of the cement powder with the acid. On the other hand as is shown by a great number of publications, in biological respect it is not without danger that it is necessary to fill cavities of teeth with a paste containing free phosphoric acid, on account of the possible irritation of the live pulpa.

Now, these and other disadvantages are avoided according to the present invention. For this purpose the cement powder is modified so as to set with water or an indifferent aqueous solution instead of with phosphoric acid. In accordance with the invention this is achieved by adding to and intimately mixing with the cement powder, for instance, with a suitable aluminum silicate, a salt of a phosphoric acid of high solubility in water which is capable of passing rapidly into solution, in solid finely pulverised state, preferably an acid or primary salt of the acid containing water of crystallisation. On mixing a cement composition of this kind with water there is formed a plastic paste in the same manner as when mixing phosphoric acid with an ordinary cement powder. Said paste sets and hardens to a product exhibiting very remarkable resistance in chemical and physical respect. The chemical advance achieved thereby consists, as is apparent, in the fact that the setting does not take place in a strongly acid medium as before but in a practically neutral one although the speed of setting and hardening is practically the same.

As especially suitable addition to an ordinary cement powder there have proved to be the non-hydroscopic, very readily water soluble hydrated forms of primary salts of phosphoric acid, especially those of lithium, beryllium, aluminum, zinc and magnesium whereby these metal phosphates may be used either alone or in mixture with each other.

A further advantage of a cement composition of this kind consists in the fact that it is possible to vary and adjust the time and speed of setting in great intervals, for instance, from 1 to 10 minutes, depending upon the amount of phosphate added to the cement powder. Thereby the speed of setting decreases with an increase of this addition. In general it is advisable to add about 15 to 30% of phosphate to the cement powder depending upon the nature of the originally used cement and upon the speed of setting desired.

Of course, as it is understood by the expert in this field, the optimal composition is to be found out by preliminary experiments with various salts as well as with various amounts of the salt or salt mixture best suited for this purpose. A cement powder that ordinarily sets in a comparatively long time, is preferable mixed with a salt that is capable of accelerating the setting time, for instance, aluminum mono phosphate while for a cement powder which ordinarily sets rapidly there is used a salt capable of retarding the setting, for instance, zinc mono phosphate. The suitability of other salts may be found out in the same manner.

Instead of the preferably used primary salts of ortho phosphoric acid there may be employed likewise analogous salts and meta- or pyrophosphoric acid. The use of secondary phosphates is advisable only when they possess a sufficient water solubility. Tertiary phosphates are ordinarily excluded for this purpose.

The inventive idea set forth herein and in the claims annexed hereto does not refer—as is stated herewith explicitly—to the use of a binding liquid consisting of phosphoric acid that has been neutralized by means of basic oxides and, hence, contains, besides primary phosphates in solution, free phosphoric acid.

The following examples serve to illustrate the invention, without, however, limiting the same to them:

1. 100 grams of an ordinary dental cement powder, for instance, a sodium aluminum silicate

capable of setting or mixing with phosphoric acid, are intimately mixed with 15 grams of finely pulverized primary zinc phosphate

$$[ZnH_4(PO_4)_2.H_2O]$$

The mixture is capable of forming a plastic paste with water, said paste setting to a very resistant filling.

2. In order to retard the speed of setting of a cement powder as it is used in Example 1 there are added to 100 grams of the same 20 grams of finely pulverized primary zinc phosphate and 20 grams of finely pulverized primary magnesium phosphate. This cement composition sets comparatively more slowly than the cement composition according to Example 1.

3. To produce a more rapidly setting cement composition 100 grams of a cement powder as it is used in Example 1 are mixed with 25 grams of finely pulverized primary magnesium phosphate.

4. 100 grams of zinc oxide as it is used in dentistry are mixed with 20 grams of finely pulverised primary zinc phosphate and 15 grams of primary aluminum phosphate $[AlH_6(PO_4)_3]$. This cement composition sets on mixing with water to a hard and resistant filling.

BRUNO SCHMIDL.

Published May 11, 1943

Serial No. 283,256

ALIEN PROPERTY CUSTODIAN

DRIVE MECHANISMS FOR ATTACHMENT TO AIRPLANE MOTORS

Otto Mader, Hans Gropler and Erwin Handke, Dessau, Germany; vested in the Alien Property Custodian

Application filed July 7, 1939

This invention relates to drive mechanisms for attachment to airplane motors, so that another device, as well as a propeller, may be operated by the motor without making any change in the construction of the latter; it is an aim of the invention to provide such a drive mechanism for a blower, or other air pumping unit, employed for exhausting air from the skin layer adjacent portions of an airplane.

It is an object of the invention to provide a drive mechanism wherein a bearing is secured to the motor housing, preferably where the starter is usually located, to support one extremity of an extension shaft of the drive mechanism, and to provide coupling parts on both extremities of the extension shaft one for attachment to a coupling part on the motor shaft and the other for attachment to a starter. Moreover the extension shaft must be strong enough to transmit power from the starter to the motor when they are spaced some distance apart, and also for transmitting a drive from the motor to a device mounted upon a suitable portion of the airplane body.

Another object of the invention is to provide a drive mechanism which will not interfere with the resilient motor mounting; and for this purpose the extension shaft is supported adjacent the motor housing in at least two bearings and at least one universal joint is provided in the said extension shaft intermediately of its length.

A further object of the invention is to provide a light and simply constructed drive mechanism wherein a housing, adapted to be mounted upon a portion of the airplane body, is provided which serves as a support for the starter and also contains a driving means for transmitting power from the extension shaft to the device to be driven by the motor.

Yet another object of the invention is to provide such a drive mechanism wherein a stub shaft, for connection to the device to be driven, is supported for rotation in the housing, a positive drive is arranged therein between the extension shaft and the stub shaft, and a clutch is provided in the stub shaft, which is divided into two sections, between the positive drive and its extremity intended for attachment to the device to be driven; this provision is made for permitting the device to remain stationary when the motor is being turned over by the starter.

Having thus stated some of the objects of the invention, which consists in certain novel construction and arrangement of parts, I will now describe an embodiment thereof with the aid of the accompanying drawing wherein a longitudinal section of the invention is shown.

Referring to the drawing, 1 designates a conventional airplane motor to the housing of which a bracket 3, supporting at least two separate aligned bearings 5 and 6 therein, is secured where a starter, indicated at 2*a*, is usually mounted. The bearings 5 and 6 support an extension shaft 4 for rotation, and the latter is provided at its adjacent extremity with a coupling part 7 which engages a corresponding coupling part 8 fixed on one end of the shaft of the motor 1. 14 and 15 denote universal joints provided in the extension shaft 4 intermediately of its length.

13 denotes a housing adapted to be mounted upon a suitable part of an airplane body, and has a starter mounted upon its side remote from the motor 1. The adjacent extremities of the shaft of the starter 2 and of the extension shaft 4 which extends through the housing 13 are provided with coacting coupling parts 7*a* and 8*a* respectively, and the said extension shaft 4 is in the present instance rotatably supported in a bearing provided in the side of the housing 13 adjacent the motor 1.

Supported in bearings provided on opposite sides of the housing 13, and projecting through one side thereof for attachment to the shaft of a device (not shown) to be driven, is a stub shaft 11 having a gear 10 thereon which meshes with a gear 9 upon the extension shaft 4. Between the gear 10 and the side of the housing 13 through which the stub shaft 11 projects for attachment to the device to be rotated, the said stub shaft is split and provided with coacting parts of a clutch 12. Thus when the motor 1 is being turned over by the starter 2 the clutch 12 may be disengaged so that the extremity of the stub shaft 11 connected to the device to be driven will remain stationary.

From the foregoing it will be seen that we have provided a drive mechanism which can be connected to a conventional airplane motor without making any change in the construction of the latter and through this drive mechanism a device may operated which is located upon a suitable portion of the airplane body located at some distance from the motor.

OTTO MADER.
HANS GROPLER.
ERWIN HANDKE.

PUBLISHED

MAY 11, 1943.

BY A. P. C.

O. MADER ET AL
DRIVE MECHANISM FOR ATTACHMENT
TO AIRPLANE MOTORS
Filed July 7, 1939

Serial No.
283,256

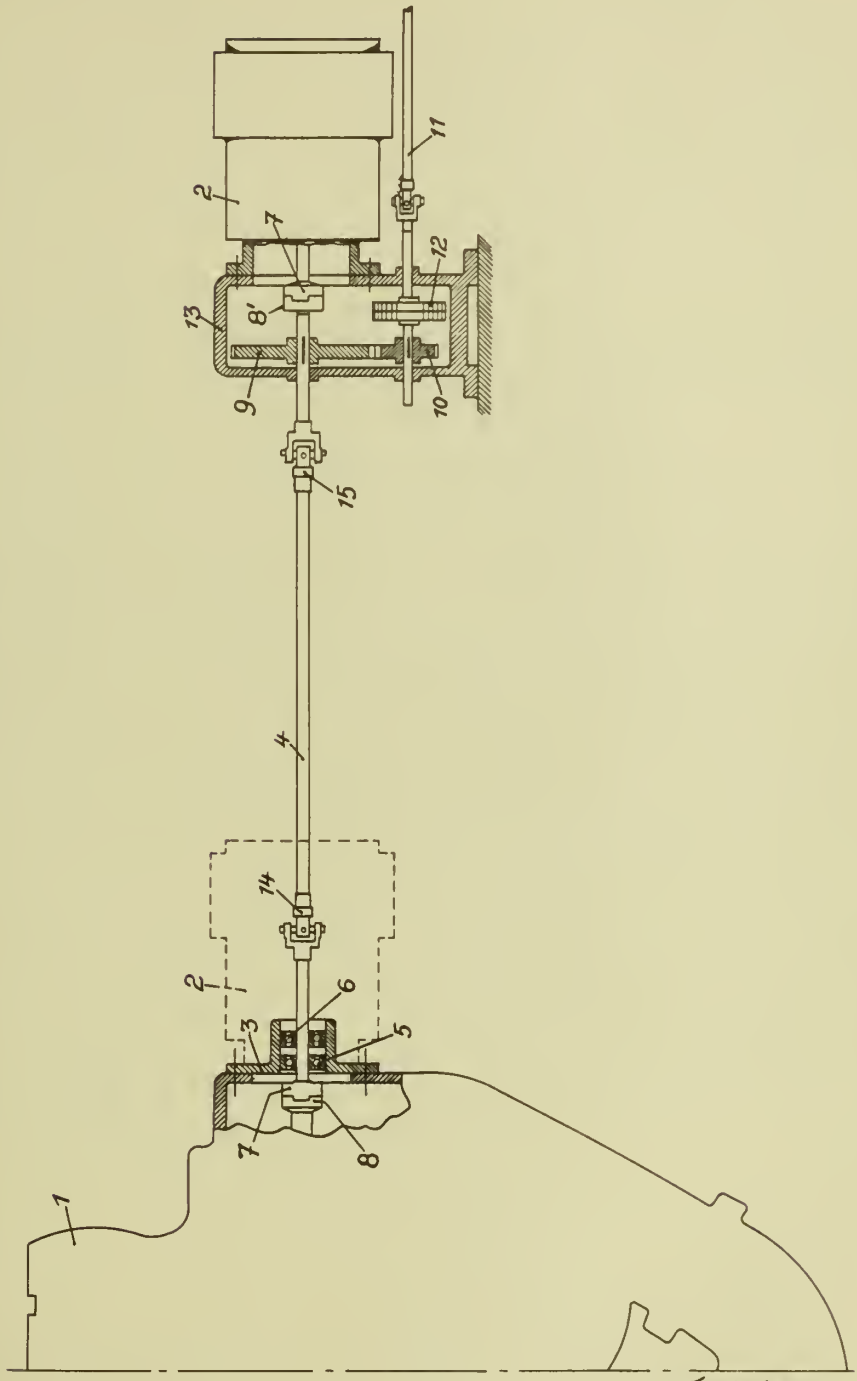

Inventors
Otto Mader
Hans Gropler
Erwin Handke
by Gerald J. Baldwin
Attorney.

Published May 11, 1943

Serial No. 283,283

ALIEN PROPERTY CUSTODIAN

HEATER FOR PERMANENT WAVING

Jean Leclabart, Courbevoie, France; vested in the Alien Property Custodian

Application filed July 7, 1939

My invention relates to heaters for permanent waving and its main object is to provide such a heater which is heated on heating bars and restores the accumulated heat by means of a graduating device, thereby avoiding the suddenness of the shock at the instant when the heater is placed on the air.

Other features and advantages of the invention will become apparent from the ensuing description taken in conjunction with the accompanying drawing which shows diagrammatically and merely by way of example, one embodiment of my invention. In said drawings:

Fig. 1 is a vertical section of a heater according to my invention.

Fig. 2 is a perspective view of said heater.

Fig. 3 is a plan view of one of the jaws of the heater.

According to my invention, the parts 1, 1′ of the jaws of the heater are made V-shaped in order to increase the path through which the heat restored by the heat accumulator 2, 2′ travels at the instant when the heater is placed on the hair and thereby avoid too sudden an increase of temperature of the hair. However, since if the heat had to travel through the entire circuit formed by the jaws 1, 1′, the heat exchanges at their point 3, 3′ would be greater than at their ends 4, 4′, provision has been made for connecting the ends 4, 4′ to the heat accumulators at one or a plurality of points by means of small metal tongues 5, 5′ or any other device.

The whole arrangement thus constructed is mounted in a body 6, 6′ made of plastic material, the two jaws being connected together by means of springs 7, their movements being independent of each other and of the spring; said spring prevents the jaws from opening and said jaws are pivoted on a ball 8 for which a housing 9 is provided in each of the jaws, thereby enabling same to take up all the necessary positions about the lock of hair, whatever be the regularity of the rolling thereof.

While I have illustrated and described the preferred form of construction for carrying my invention into effect, this is capable of variation and modification, without departing from the spirit of the invention.

JEAN LECLABART.

PUBLISHED
MAY 11, 1943.
BY A. P. C.

J. LECLABART
HEATER FOR PERMANENT WAVING
Filed July 7, 1939

Serial No.
283,283

Fig. 1

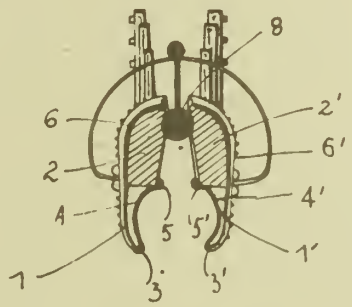

Fig. 2

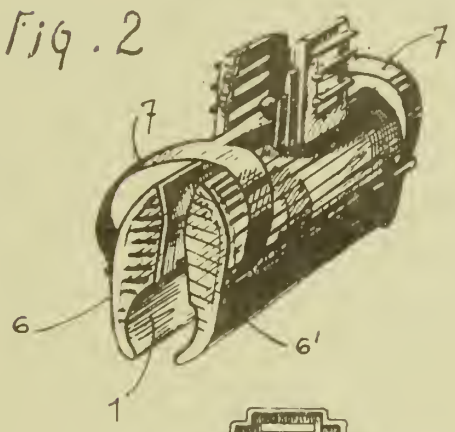

Fig. 3

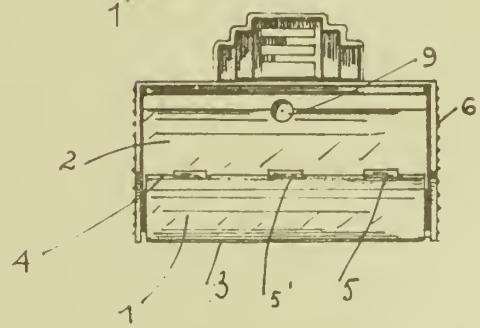

INVENTOR:
JEAN LECLABART
BY Maxwell E. Sparrow
ATTORNEY

Published May 11, 1943

Serial No. 283,285

ALIEN PROPERTY CUSTODIAN

BENDER FOR ROLLED-UP STRIP SUCH AS WINDOW FRAME, PIPE OR FUEL TANK OF MOTOR VEHICLES

Takeo Sato, Tsurumi-ku, Yokohama, Japan; vested in the Alien Property Custodian

Application filed July 7, 1939

This invention relates to bender for rolled-up strip, such as window frame, pipe or fuel tank of motor vehicles.

In hitherto apparatus, a frame mould in shape of window frame or windshield is fixed and a rolled-up strip is attached to the frame mould and several pairs of rollers are arranged and moved on the corners of the mould, thus the strip can be bent. Therefore the driving means of these rollers may be complicated.

The object of this invention is to construct the bending apparatus for rolled-up strip forming window frame in which the frame mould is not fixed and it is movable, therefore only one pair of roller is employed. Accordingly, the construction of the bender and its operation is more simple than the hitherto apparatus and the strip can be bent and finished accurately.

The other object of this invention is to construct the window frame, the pipe and the fuel tank etc. whose bending portions have not rumples or stress by employing a special mandrel consisting of many metal pieces or a hard rubber.

This apparatus according to this invention consists of a mould which is formed a frame having uniform width and has a groove to insert the strip to be bent on the outer side, and a pair of roller which contact to the both sides of the mould. Then the mould accompany with the strip is moved between a pair of roller so that the strip may be bent along the mould. And in one embodiment of this invention, the mould is rotated between a pair of roller by the friction of them, while a pair of roller is driven. In another embodiment of this invention, the mould is connected with the rotating shaft by the arm and the rollers are mounted on a sliding disc in such a manner that the rollers may be always contacted with the side surface of the mould by the movement of the sliding disc.

This invention will be described in connection with the accompanying drawings, in which

Fig. 1 is a plan view of one embodiment of this invention.

Fig. 2 is a sectional view, taken on the line II—II of Fig. 2.

Fig. 3 is an enlarged plan view showing one portion of the mould and a pair of roller.

Fig. 4 is a sectional view, taken on the line IV—IV of Fig. 3.

Fig. 5 is a plan view of another embodiment of this invention.

Fig. 6 is an enlarged sectional view, taken on the line VI—VI of Fig. 5.

Fig. 7 is a side view of a mandrel inserted into the strip and one part is shown in section.

Fig. 8 is a sectional view of a modification of the mandrel.

Referring to the drawings, 1 is a frame mould formed of the window frame and consists of an upper member 3 and a lower member 4 secured together by the screw 7. The lower member 4 has the uniform width and has a groove 2 to be inserted a strip *a* on the outer side. 5 are three staples whose one leg is inserted into an aperture 8 perforated on the concave curved side 6 of the upper member 3 of the mould and the other leg is contacted on the outer side of the mould, thus the strip *a* can be moved along the curved side 6 of the mould by these staples 5. 9 is a supporting table which has a rectangular recess 10 on one side and two sliding plates 11 and 12 are slidably fitted into the recess. Two rollers 13 and 14 are rotatably mounted on these sliding plates 11 and 12, and the shafts 13′ and 14′ of these rollers have pinions 15 and 16 meshed with each other on the lower side of the table 9. The lower end of the shaft 13′ of the roller 13 has a worm wheel 17 which meshes with a worm 18 at one end of a driving shaft 19, and this driving shaft is driven by the suitable motor through a pulley 20. The mould 1 is held by two rollers 13 and 14 on its both sides and one of rollers 14 always presses the strip *a* by a spring 22 which is arranged between the sliding plate 12 and a retaining plate 21. This retaining plate is slidably adjusted in the recess 10 by a screw rod 23, thus the pressure of the roller 14 against the mould 1 can be regualted by the rotation of the screw rod. One end of the strip *a* inserted in the groove 2 of the mould is secured to the lower member 4 by means of a screw 25 and a core 24 fitted into the strip *a* as shown in Figs. 3 and 4. A mandrel 26 is inserted into the strip *a* as shown in Fig. 7, said mandrel consisting of several metal pieces whose boundary is the same figure with the section of the strip, and they are jointed with a flexible shaft 27 and spaced each other in small gap. The inner end of the flexible shaft 27 is screwed to a guide mandrel 28 whose boundary coincides with the inner surface of the strip and the outer end of the guide mandrel is connected with a rod 29. The other end of this rod 29 is secured to a suitable bracket 30 on the table 9.

The operation of this apparatus is as follows. When the driving shaft 19 is rotated by the suitable motor through the pulley 20, a pair of roller 13, 14 is rotated through the worm 18, worm wheel

17 and pinions 15, 16, then the mould 1 is moved by the friction with the rollers, therefore the strip *a* in the groove 2 of the mould can be bent in accordance with the curvature of the mould without any rumples or stress by means of the mandrel 26.

In the modification of this invention as shown in Figs. 5 and 6, the mould 1 is rigidly connected with a rotating shaft 32 by the arm 31. The shaft 32 has a worm wheel 33 on the lower side of the table 9 and this worm wheel meshes with a worm 35 of a driving shaft 34 which is driven by any suitable motor through gear wheels 36, 37, 38 and 39. One side of the table, a rectangular opening 40 is formed and a rim 41 is formed on the inner edge of the opening 40. A sliding disc 42 is fitted into the opening and the rim 41 is engaged into a circular groove 43 formed on the outer edge of the sliding disc. This sliding disc is perforated a square hole 44 in which a plate 45 is slidably fitted. 47 is a damping head made of hard rubber secured to the end of a screw rod 46 which is screwed in the sliding disc 42, and the sliding plate 45 is always pressed to the inner edge of the square hole 44 by the damping head. Three rollers 48 are mounted on the sliding plate 45 and a roller 49 is fixed to the sliding disc 42 in opposite position to the rollers 48 in such a manner that these rollers 48 and 49 hold the mandrel 1 between them. A bridge member 50 is mounted on the sliding disc 42 across the hold 44 and a screw rod 51 is screwed into the central portion of the bridge member. This screw rod 51 has a damping head 52 on the inner end, said damping head pressing the strip *a* in the groove 2 of the mold. 53 is a spring whose one end is fixed to the table 9 and the other end is attached to the sliding disc 42 so that the sliding disc may be always pressed to the direction of the mould although the sliding disc slides outwardly along the opening 40.

Thus, the mould is rotated by the rotating shaft 32 and the sliding disc can be slided sidewise along the opening in such a manner that the rollers may be always contacted with the mould, therefore the strip *a* in the groove 2 of the mould can be bent in accordance with the curvature of the mould.

The modification of the mandrel as shown in Fig. 8 consists of a hard rubber mandrel 55 mounted on the flexible shaft 54 and a guide mandrel 28 made of fiber, and this guide mandrel is articulately jointed to the end of the flexible shaft 54.

The bending apparatus according to this invention has the advantage that the construction and treatment is very simple due to the rotation of the mould and the strip can be bent accurately without any rumples or stress on the bending surface by means of the special mandrels.

While I have shown and described two embodiments of this invention, it will be apparent that these embodiments, as well as the detail construction of the several parts, may be varied without departing from the principle of my invention, for example, the mould may be rotated by means of a rack and a pinion without the friction of the rollers as shown in Fig. 1.

TAKEO SATO.

PUBLISHED

MAY 11, 1943.

BY A. P. C.

T. SATO

BENDER FOR ROLLED-UP STRIP SUCH AS WINDOW FRAME, PIPE OR FUEL TANK OF MOTOR VEHICLES

Filed July 7, 1939

Serial No. 283,285

2 Sheets-Sheet 1

Fig. 1

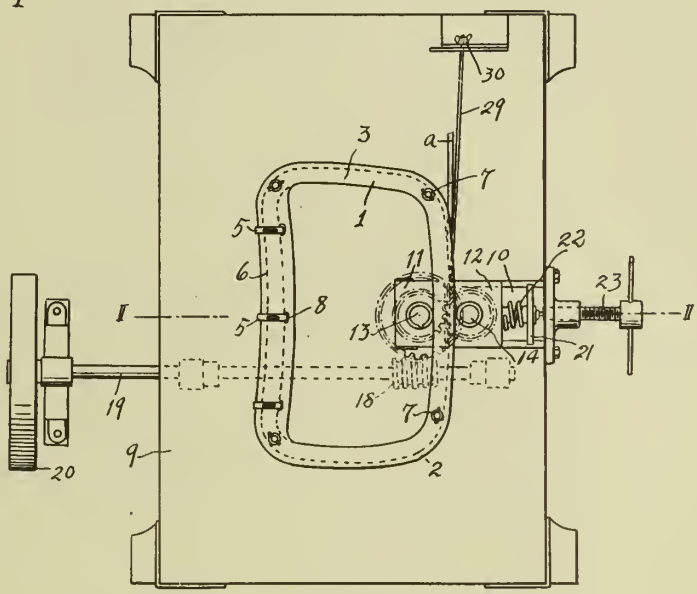

Fig. 3

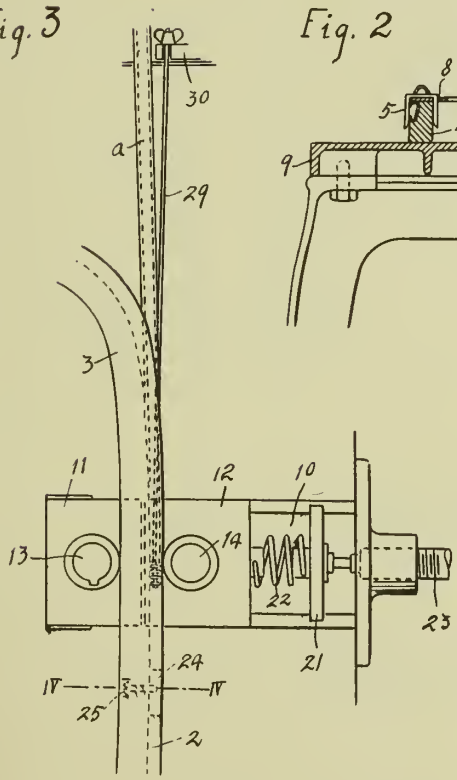

Fig. 2

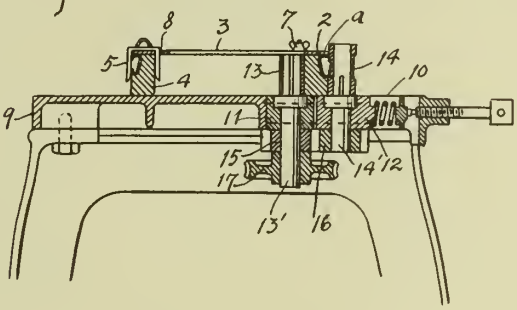

Fig. 4

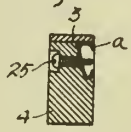

Inventor

Tatsu Sato

By Connolly Bros

Attys

PUBLISHED MAY 11, 1943.

T. SATO

BENDER FOR ROLLED-UP STRIP SUCH AS WINDOW FRAME, PIPE OR FUEL TANK OF MOTOR VEHICLES

Filed July 7, 1939

Serial No. 283,285

BY A. P. C.

2 Sheets-Sheet 2

Fig. 5

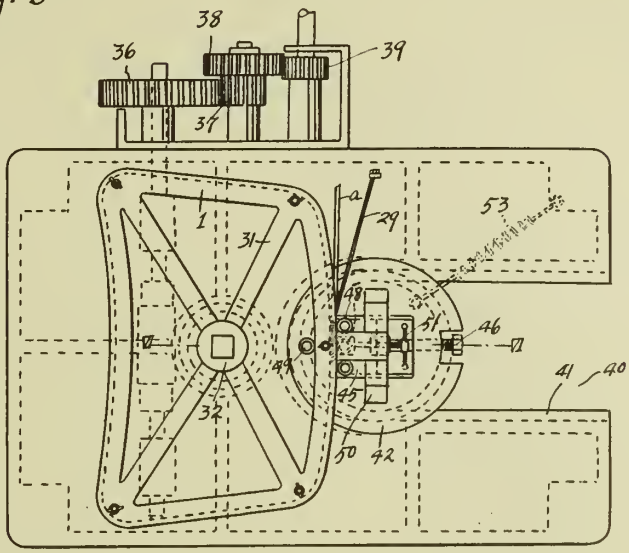

Fig. 6

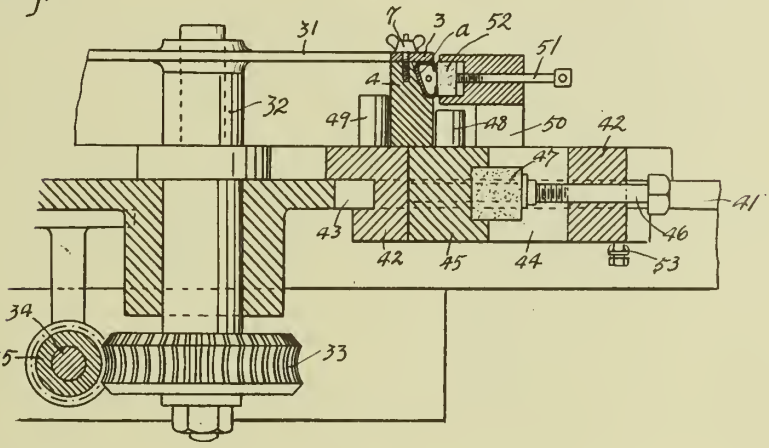

Fig. 7

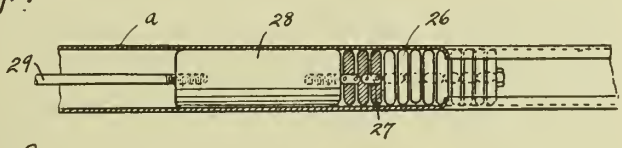

Fig. 8

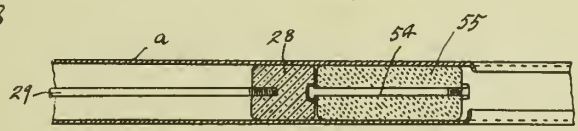

Inventor
Takeo Sato
by Connally Bros
Attys

Published May 11, 1943

Serial No. 283,320

ALIEN PROPERTY CUSTODIAN

METHODS OF PRODUCING HARD-SOLDERED OR WELDED JOINTS

Hans Edner, Dessau, Germany; vested in the Alien Property Custodian

No Drawing. Application filed July 7, 1939

This invention relates to methods of producing hard soldered or welded joints.

The existing methods of hard-soldering or welding have in common the feature that the union takes place through the diffusion of molten metal in the material welded or soldered. This "fluid diffusion" is attended with the drawback that at low temperatures i. e. in the case of working temperatures near the melting point of the solder the rate of flow is comparatively low so that the soldering or welding operation takes a comparatively long time to perform, and in order to attain speedier diffusion of the metal comparatively high working temperatures are needed. In the case of the soldering agents hitherto in use, however, both the protracted working period and the higher working temperature have the defect of damaging the material because the melting points of said agents are already in the neighbourhood of temperatures at which the metallic material being soldered or welded is exposed to damage from so-called gasification (occluded hydrogen) or internal transformations in the material such as coarsening of the grain, structure. The resulting difficulties can best be explained with reference to the conditions occurring in brazing, hard-soldering or welding copper.

Hitherto the hard-soldering of copper has been effected with the aid of:

(1) Brazing solder; (2) Phosphorus-copper solder or phosphorus-copper-silver solder; (3) Technical silver solder (copper-silver-zinc).

When brazing solders are employed their high melting point (820–900° C) has the drawback that very high working temperatures (980°–1050° C.) must be employed in order to reduce the working time to economic limits. In the case of fine-gauge material in particular these high working temperatures cause a considerable coarsening of the grain, and when a reducing atmosphere is present, moreover, so-called "hydrogen sickness" results; both of these greatly impair the mechanical strength of the copper. Moreover, brazing solders have always been used in association with a flux, which forms another source of the risk of hydrogen sickness since these fluxes invariably contain water in some form or other. Furthermore, when solid or liquid fluxes are used, residues and compounds with the oxides of copper are always formed and have to be removed subsequently by pickling, thus causing a considerable loss of material and entailing prolonged working periods. Brazing solders have the further defect that in soldering thin sheet metal it is impossible to gauge the requisite amount of solder with precision since the thickness of commercial brass sheets or foils imposes a limit which is soon reached. As the result of the consequently unavoidable excess of brazing solder used, thin sheet copper is very liable to become alloyed right through in places, the brass completely penetrating the copper and weakening its structure as by causing perforation.

The existing commercial grades of phosphorus-copper solders—containing 7–9% of phosphorus at the most—allow the working temperature to be lowered to about 735° C., their melting point being in the most favourable circumstances 707° C. However, both this working temperature and the time required for soldering permit the occurrence of the aforesaid metal sicknesses in a pronounced degree. The phosphorus-copper solders have the further defect that owing to the difficult process of preparation their phosphorus content can never be maintained at a precisely uniform level and consequently the phosphorus content and therefore the soldering qualities (especially that of ready fusibility) vary in a very considerable degree in one and the same stick of solder. It is also very difficult to apportion the phosphorus-copper solder with accuracy because owing to its brittleness it cannot be worked up into foil or thin wire but is obtainable only in the form of cast sticks about 3 mm. in diameter or in granular form, the grain size of which is too coarse to enable uniform distribution to be obtained on level surfaces. On steeply tilted or vertical surfaces it is impossible to use this granular solder. Since the phosphorus contained in the solder remains substantially intact in the solder present in the welded seams, the latter are apt to be brittle.

Technical silver solders (copper-silver-zinc, or copper-silver-cadmium) have the advantage that on account of the still lower melting point (630° C. in the most favourable circumstances), the working temperature can be further reduced. On the other hand they have the inconvenience of being very expensive and in the case of low working temperatures near the melting point of the solder the rate of diffusion of the latter is so low that operating at these low temperatures would take up a disproportionate amount of time. Moreover, within the temperature range in question, the resulting hydrogen sickness favours the extensive breaking down of the copper. Another defect of the silver solders is that a flux, the particular kind being immaterial, has to be used which also increases the cost and in the case of

the usual liquid or solid fluxes also leads to losses of material in the subsequent pickling.

As in the case of brazing or hard-soldering the welding of copper has hitherto encountered serious difficulties. In fusion welding the copper sustains such local overheating that this method can be applied only to articles of stout metal as thin sheets are easily damaged. Extraordinary difficulties are met with in the electrical-resistance welding of copper because the high electrical and heat conductivity of the metal necessitates a very high current density on the one hand and extremely accurate judging of the duration of the welding operation on the other which is attainable only by the aid of very expensive welding machines having inertialess grid control. Moreover, the process as applicable to only such parts as will not be distorted by the pressure essential for carrying out the welding operation.

As already mentioned it is a feature common to all these known methods of brazing or hard-soldering and welding that the union is effected solely by the diffusion of the metals in a state of fusion. Though a partial volatilisation of zinc occurs when brazing solder is employed, the extent of this is so slight that it cannot have any influence on the soldering operation. Moreover, the resulting zinc vapour is partially oxidised by the oxygen present so that there can be no question of any "gaseous diffusion" in fact in certain circumstances the effect is to impede the soldering. A partial volatilisation of phosphorus occurs in the case of the known eutectic copper-phosphorus alloy, but for the most part the vaporised phosphorus is consumed in deoxidising the surfaces under treatment and therefore in this case also no "vaporous diffusion" can occur. Up to the present this idea of predominantly "liquid diffusion" has been upheld with reference to all hard-soldering and welding methods, and the attempts to remedy the defects of these methods have always been confined to lowering the melting point of the solder with a view to arriving at more favourable working temperatures and time consumption.

However, not only temperature and time but also, as third variant, the state of aggregation of the solder or the article under treatment has a determinative influence on the kinetics of the soldering or welding operation. The invention is based on the perception that the diffusion in the "liquid" condition must always be attended with the drawback that the duration of the reaction is longer than diffusion in the "vaporous" condition.

According to the present invention hard-soldered or welded joints are produced by a method which includes the use of a soldering agent adapted to form an alloy with the material of the article under treatment and to exert a reducing action and which wholly or partially vaporizes at a temperature below that at which the quality of the material under treatment becomes impaired, said agent being used in such quantities that even after as much of it as is required for the reduction of the surface of the metal has been used up there is still available a sufficient quantity of vapour to initiate a spontaneous "vaporous" diffusion. By means of the method according to the invention a very speedy reaction and therefore short working periods are obtained even at low working temperatures. The advantageous effect of this is to protect the materials and the working appliances and also to reduce the consumption of energy for performing the operation. The soldering agent may consist of metals and metalloids or mixtures or combinations thereof.

The invention will now be described with reference to several typical methods of its application to material composed of copper.

For example a thin layer of phosphorus in any of its modifications can be applied by itself to the metallic parts to be soldered and the soldering effected by heating in known manner such as in a flame, furnace or welding machine. In so doing it has been found preferable to employ red phosphorus because it is harmless and non-poisonous at room temperature and is also cheap. At about 600° C. red phosphorus passes spontaneously into the condition of vapour which exerts a reducing action on the surrounding metallic surfaces and very quickly converts them, owing to its high rate of diffusion, into a readily fusible alloy, thereby establishing metallic union. By suitable apportionment of the amount of the the solder seams are obtained which are visible only under the microscope and are undistinguishable from a good electrical resistance weld. By comparison with the existing hard-soldering methods in which layers of solder are recognisable by the unassisted eye, the method according to the invention consumes an insignificant amount of the soldering agent. Owing to the absence of a thick layer of solder, the heat-conductivity of a soldered union obtained in accordance with the invention is naturally substantially better than in the case of the seams obtained by the existing methods of hard soldering. Moreover, owing to the reducing action of the phosphorus vapour the employment of a special flux becomes superfluous. On the other hand in the hitherto customary hard-soldering methods using fluxes, vitreous borax enamels are formed which are difficult to remove and in their removal lead to considerable losses of material.

The employment of phosphorus offers the further great advantage that the soldering agent can be applied in the finest state of division and therefore in accurately apportioned quantity to the seat of the join since the phosphorus can be used in the form of a suspension. Owing to the good properties of the soldering agent in respect of apportionment, uniform distribution and high reaction speed it is even possible to connect copper-plated light metals by means of a welding-roller machine at the rate customary in welding iron, whereas welding or hard-soldering of such copper-plated light metals has hitherto been impossible. The use of red phosphorus as a soldering agent also enables copper to be united with other metals such as with iron or nickel in a similar manner.

Instead of employing phosphorus by itself mixtures or compounds of phosphorus with copper or other metals of lower melting point than the material under treatment (copper in the present instance) may be used for performing the method according to the invention.

Examples

Example 1.—90% of powdered copper (grindings) are mixed with phosphorus. The soldering agent obtained has a lower reaction speed than that of phosphorus itself. It thus becomes possible to control the depth to which the diffusion extends a result which may be desirable in the case of thin or plated materials.

Example 2.—Copper phosphides are added to

phosphorus (e. g. 50% of copper phosphides to 50% of red phosphorus). The soldering agent produced has speedier reaction qualities than that of phosphorus alone, thus enabling rolled welds to be produced at high speed.

Example 3.—Copper phosphides are intimately mixed with one or more metals or metallic phosphides of lower melting point than copper, for example, 15% of copper phosphide are mixed with 85% of tin. The soldering agents obtained melt between 300° and 600° C. and are preferably used in place of soft solder in cases where importance is attached to mechanical strength or resistance to corrosion in the weld.

Example 4.—Soldering agents are prepared by intimately mixing phosphorus with metals or metallic phosphides of lower melting point than copper, a typical mixture being 25% of red phosphorus and 75% of tin.

In examples 1 to 4 phosphorus may be replaced by other metalloids of Groups V and VI of the periodic system (e. g. arsenic, solenium and tellurium), either singly or in admixture or combination with phosphorus. The method according to the invention can be applied not only in the case of copper but also to other metals especially nickel and platinum.

HANS EDNER.

Published May 11, 1943

Serial No. 284,099

ALIEN PROPERTY CUSTODIAN

GLASS COMPOSITIONS

Hans Steinbock, Dusseldorf-Gerresheim, Germany; vested in the Alien Property Custodian

No Drawing. Application filed July 12, 1939

The invention relates to a moisture- and heat-resistant glass poor in or substantially free from alkali ingredients which is easy to melt and has a low softening point and which is especially suited for the manufacture of finest glass fibers and filaments.

As is well-known, the alkali present in the surface layers of alkaline glasses is more or less dissolved and lixiviated under the influence of atmospheric moisture, this action being even more severe under the direct influence of water or water vapors, such as steam. The dissolved alkali in conjunction with the moisture forms a coating or film which continues to attack the glass. Moreover, this coating is electrolytically conductive and deteriorates or destroys metal parts that may be in contact with it. As the moisture attacks the glass at the surface, the degree of attack or the amount of lixiviated alkali while depending on the temperature and moisture of the surrounding atmosphere is primarily dependent on the specific size of the glass surface. The attack is therefore particularly severe with fine glass fibers or filaments which present an enormous specific surface as compared, for example, with thick-walled glass vessels or implements.

Hitherto, there had to be used for technical purposes glass with a certain content of alkali, because the known glasses free or substantially free from alkali are very difficult to melt and due to their high softening point also difficult to form or work. For this reason, one has used the common technical glasses with a more or less high content in alkali also for the production of fibers and filaments.

Lately, fine glass fibers and filaments are increasingly used not only for heat insulations but also for electric insulations. However, in the latter case the insulating power of the fibers is rapidly reduced or lost when they are exposed to the influence of moisture which causes the alkaline surface layers of the fibers to become electrolytically conductive. Therefore, it was necessary to impregnate or coat the fibrous insulations or fibers with water-repellent or moisture-resistant substances, such as suitable varnishes and the like. But these coatings are much inferior to glass as regards thermal resistance. An impregnated or varnished glass fiber insulation can at most be heated up to 200° C., while glass can easily stand temperatures up to 500° C. and more without any damage. The favorable thermal properties of glass therefore cannot be fully utilized when the fibers are coated as indicated.

Necessity therefore arose to make such fibers or filaments, especially when to be used for electrical insulations or for purposes requiring high thermal and chemical resistance, of glass poor in or free from alkali.

The known glasses of this kind have the disadvantage that very high temperatures and a long period of time are required to melt them, wherefore special furnaces of highly refractory material must be used, and that their forming or working temperatures are also very high. The production and working of these glasses, especially the formation of fibers or filaments therefrom is therefore difficult and expensive.

It is the object of the present invention to provide a glass composition poor in or free from alkali which can be molten without any difficulties at the common temperatures of 1380° to 1450° C. in ordinary melting furnaces and in the usual period of time and which can be worked, for example drawn to fine fibers or filaments, at temperatures not much higher than the working temperature of the ordinary technical glass, and which is highly resistant to heat, moisture and chemicals.

I have discovered that the above properties are inherent in a glass containing not more than about 55 to 60% silicic acid, no alkali or less than 10% alkali, about 20 to 30% earth alkalies, preferably barium oxide or strontium oxide, not more than 10 to 15% boric acid, and additions of about 3 to 10% alumina, iron oxide and/or manganic oxide and about 2 to 8% zinc oxide and/or cadmium oxide. In a batch free from alkali with less than 60% silicic acid, about 20 to 30% earth alkalies and less than 15% boric acid, suitable proportions for the additions are 5% alumina, 1 to 5% zinc oxide or cadmium oxide or both together, about 2 to 10% iron oxide or manganic oxide or both together, and up to 1% fluorine.

The use of barium oxide or strontium oxide instead of the ordinarily used calcium oxide reduces the tendency of the glass to devitrify. The glass properties in general are further improved by the said addition of 3 to 10% of trivalent oxides, such as alumina, iron oxide and manganic oxide either singly or together, and of 2 to 8% of bivalent oxides, such as zinc oxide and cadmium oxide either singly or together.

An example of a batch composition according to the invention for a glass poor in alkali is as follows:

	Parts by weight
Glass melting sand	365
Borax	225
Feldspar	250
Heavy spar	250
Dolomite	95
Zinc oxide	20
Soda	30

The glass obtained from this batch has the following composition:

	Per cent
Silic acid	53.5
Boric acid	7.5
Alumina	5
Barium oxide	19
Lime	3
Magnesium oxide	2
Zinc oxide	2
Alcali oxides	8

A glass of this kind has a high coefficient of expansion as compared with the ordinary Jena glass poor in alkali. As a result thereof fibers made from this glass will have high mechanical stresses, the favorable influence of which on the mechanical and chemical properties of the glass surface is well-known.

As stated above, the alumina can be wholly or partly replaced by iron oxide, manganic oxide or other trivalent oxides, the zinc oxide can be wholly or partly replaced by cadmium oxide and the barium oxide can be wholly or partly replaced by strontium oxide, lime and magnesium oxide or one or more of these oxides.

The glass is also very resistant against chemical attacks in spite of the low percentage of silicic acid and boric acid. Therefore, only very little alkali can be dissolved even by very moist air, so that fibers or filaments made therefrom lend themselves admirably well for the manufacture of woven or knitted tapes or tubes for electrical insulating purposes.

Moreover, the tendency of the glass to devitrify is extremely low in spite of the high contents in earth alkali. Also it can be easily worked or formed in spite of its low content of alkali. Thus, it can be drawn into finest fibers of any desired length, which are also well suited for textile purposes because of their good elastic and mechanical properties.

An example of a batch composition according to the invention for a glass free from alkali is as follows:

	Parts by weight
Glass melting sand	550
Hydrated boric acid	310
Hydrated alumina	75
Dolomite	95
Zinc oxide	20
Heavy spar	250
Calcined pyrites	20
Manganese ore	10
Calcium fluoride	20

The glass obtained from this batch has the following composition:

	Per cent
Silicic acid	53.5
Boric acid	13
Alumina	5
Iron oxide	1.7
Manganic oxide	0.8
Zinc oxide	2
Barium oxide	19
Lime	3
Magnesium oxide	2
Fluor	traces

Variations may be made in the composition within the afore-mentioned limits.

This glass possesses the same favorable properties as the glass of the first example. As it is entirely free from alkali it has a particularly high resistance against moisture, steam and other chemical attacks.

HANS STEINBOCK.

Published May 11, 1943

Serial No. 284,648

ALIEN PROPERTY CUSTODIAN

CONDENSER MICROPHONES

Erwin Gerlach, Berlin, Germany; vested in the Alien Property Custodian

Application filed July 15, 1939

The present invention is concerned with a method for assembling and mounting condenser-type microphones and the like.

In assembling condenser or electrostatic microphones special care must be taken so that no dust will be able to enter into the microphone. The distance separating the electrodes or plates amounts to only a few microns (thousandths of one millimeter); hence, any particles of dust that may get between the plates or electrodes are liable to cause serious troubles.

It has been suggested in the art to assemble condenser microphones only in regions or places practically free from dust and to do such work only in tiled workshops, or else to take care so that the dust content of work shops is reduced to the lowest possible degree.

Now, this invention discloses another working method and procedure, namely, to effect the assembly and mounting inside a closed box or container into which purified air is introduced under pressure with the result that the pressure prevailing within the box is always above the atmospheric pressure. Further objects of the invention consist in means adapted to cleaning and mounting or assembling inside this box.

The appended drawing illustrates an exemplified embodiment of the invention. Fig. 1 is a top view of the mounting box or enclosure according to the invention, with the cover thereof being removed, while Fig. 2 is a side view in section.

On its top the box 1 has a glass cover plate 2. Through a lateral wall of the box is introduced the handle or stem 3 of tongs or pliers 4, there being an articulation or swivel joint 5 whereby the tongs 4 may be moved in any desired direction. In other words, the said joint permits motion in the direction of the rod 3 as well as movement in any lateral angular sense. Opening and closing of the jaws of the tongs is effected by the aid of the handle 7 being subject to the pressure of a spring. If by pressure exerted upon the grip or handle 7, the spring 6 is compressed, this causes opening of the tongs 4. End 8 of rod 3 is fitted with a member adapted to co-operate with the clutch 9 of motor 10.

In the longitudinal side or wall of the box is a lock through which the parts forming the microphone may be brought into the interior of the box. The said lock comprises a U-shaped holder member 11, one-half of which projects into the box, while the other half extrudes from the box. Shiftable in the said holder 11 is a drawer 12 which shuts the opening provided for it in the lateral wall of the box 1. Provided in the said drawer 12 is a receiver or receptacle 13 for a microphone part. In the box, itself, is a nozzle 14 which has a guard rim 15. The said nozzle 14 is connected with a pump 16 mounted below the box, while a storage tank 17 is connected, on the one hand, with the pump 16, and, on the other hand, with an outlet inside the guard rim 15. Laterally in reference to the box is a drying chamber 18 in which is a platform 19 with several receptacles 20 adapted to accommodate microphone parts. The platform 19 is revoluble about a pivot or axis 21 by the aid of a crank 22. Heating of the chamber 18 is effected by hot water, heating being preferably by electricity.

Super-atmospheric pressure is produced inside the box 1 by the aid of a blower 23; the air handled by this blower 23 being always carefully purified.

On top of the box is a container 24 for varnish fitted with a dripper nozzle 25, a handle 26 being provided to open and close the said nozzle.

Now, the operation of this apparatus is as follows:

The drawer 12 is withdrawn from the box 1 to an extent so that a microphone part may be placed into its receptacle 13. While this is being done, the drawer 12 shuts the opening provided for it in the box 1. The drawer 12 thereupon is pushed into the box 1 to a depth so that the receptacle 13 comes to lie entirely inside the box. By compression of the spring 6 by the agency of the handle 7 of the tongs 4 are opened. By the aid of the latter, the microphone part placed in the receptacle 13 of the drawer 12 is taken out. By shifting the handle or rod 3, the microphone part (designated by M in the drawing) is placed over the nozzle 14, while the rod is being turned, until the microphone part M has been thoroughly rinsed all around by the liquid or fluid issuing from the nozzle, preferably quick-drying fluid such as carbon tetrachloride. Thereupon, the tongs with the part M are withdrawn, the clutch members 8 and 9 are engaged, and the motor 10 is cut in circuit. As a result the microphone part M is rapidly rotated and the rinsing or cleansing fluid is thrown off by centrifugal action and rapidly volatilized. A cylinder 27 is provided to gather the spattered liquid. The said cylinder has a rod 28 whereby the cylinder may be shifted. As soon as part M is dry it is placed underneath the nozzle 25 and a drop of lacquer is allowed to fall upon the under face and the top face of the diaphragm. Next rod 3 is again engaged with the motor 10 and by rotat-

ing part M inside the protective cylinder 27 the lacquer is caused to spread all over the diaphragm, while the surplus is allowed to spatter. Next part M is laid into receptacle 20 of the platform or circular disc 19 and brought into the drying chamber 18 by rotating the crank 22. While the bottom or back part of the microphone is being dried in the drying chamber 18, the top plate of the microphone is brought through the lock and drawer 12 into the box 1 in a way as hereinbefore described, gripped by tongs 4, cleansed by the nozzle, centrifuged inside the protective cylinder or casing 27 and thereupon placed also into receptacle 20 of the platform 19 and then brought into the drying chamber 18. After both parts have been dried, the bottom or back part is laid into the receptacle 13 of drawer 12, the top is fitted upon the bottom or back part so that both members are fitted in a fairly hermetic way upon each other and are then withdrawn by way of the lock and drawer 12 from the box 1. Final assembly of the microphone parts may then be completed outside the box.

Instead of a single lock arrangement 11—12, another such lock could be provided, say, in the neighborhood of the drying chamber 18, together with other tongs so that the dried back and top members are placed down upon the drawer of this lock and thereby removed from the box.

ERWIN GERLACH.

PUBLISHED
MAY 11, 1943.
BY A. P. C.

E. GERLACH
CONDENSER MICROPHONES
Filed July 15, 1939

Serial No.
284,648

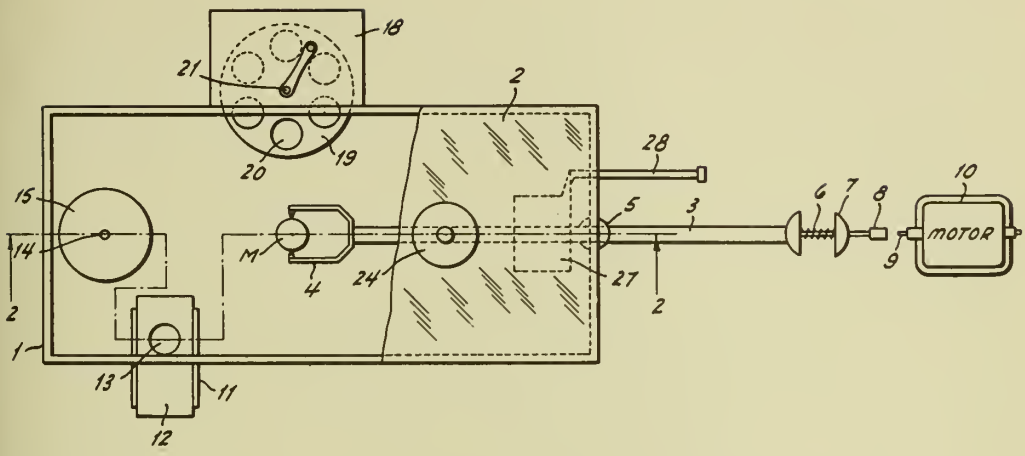

Fig. 1

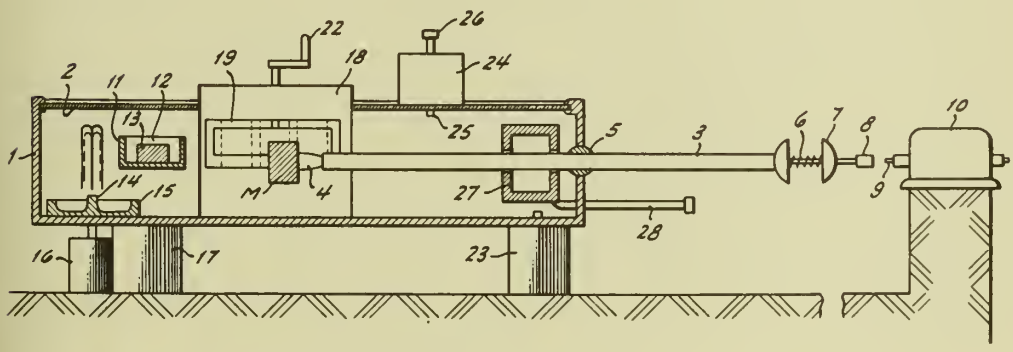

Fig. 2

INVENTOR.
ERWIN GERLACH
BY H. S. Grover
ATTORNEY.

Published May 11, 1943

Serial No. 285,861

ALIEN PROPERTY CUSTODIAN

DEVICES FOR THE RELEASE OF A WARNING SIGNAL BY ONE VEHICLE TO ANOTHER

Joseph Schwarz, Berlin, Germany; vested in the Alien Property Custodian

Application filed July 22, 1939

It is a matter of prior art that whistles tuned to a certain frequency can be used for the production of overtaking warning signals between the vehicles in traffic. In methods pertaining to this art, a certain audible signal is released from the overtaking vehicle so that a warning is given to the driver of another neighbouring vehicle.

As a rule, compressed air is used for the operation of motorcar whistles, and the required pressure is generated in a chamber by a compressor driven by the engine. Such an installation is, however, very complicated because in addition to the above-mentioned parts an air-pipe system and operating valve are necessary.

The proposed invention discloses a similar device but of simpler construction, in which device an overtaking warning signal is produced by the necessary compressed air which has been generated in a hydraulically operated chamber, which device may, for the sake of illustration, be set in operation by the driver's foot.

A possible application of the invention is illustrated in the accompanying diagram, in which a whistle F is disposed in a reflector R. The production of the necessary compressed air is accomplished by oil pressure in the following way: To the floorboard A of the vehicle is affixed a cylinder, in which a piston **2** can be operated. An oil pipe O, which operates the piston **3**, is attached to the said cylinder. The oil piston **3** is bound to a second piston **4** of somewhat larger diameter, which moves in a corresponding cylinder **7**. This cylinder serves for the production of compressed air and is isolated from the whistle F by a high pressure valve **5**. The device is returned to a condition of rest by the helical spring **6** which returns the piston **4** to its rest position.

If, therefore, the piston **2** is depressed by a foot operation, the oil piston **3** of the working cylinder **8** is necessarily forced forward, so that the air enclosed in the air cylinder **7** is compressed to about 4 to 6 atmospheres (gauge pressure). The resisting pressure of the valve **5** is then overcome by this high pressure, and the exuding current of compressed air operates the whistle.

JOSEPH SCHWARZ.

PUBLISHED

MAY 11, 1943.

BY A. P. C.

J. SCHWARZ

DEVICES FOR THE RELEASE OF A WARNING SIGNAL BY ONE VEHICLE TO ANOTHER

Filed July 22, 1939

Serial No. 285,861

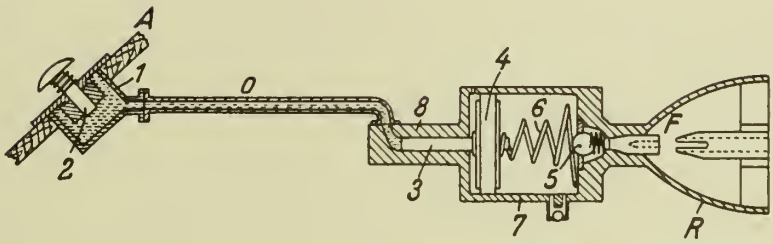

Inventor:
Joseph Schwarz
by E. D. Phinney
Attorney

Published May 11, 1943

Serial No. 285,951

ALIEN PROPERTY CUSTODIAN

OUTER COVER OF RIGID AIRSHIPS AND METHOD OF MANUFACTURING THE SAME

Erich Hilligardt, Friedrichshafen, Bodensee, Germany; vested in the Alien Property Custodian

No Drawing. Application filed July 22, 1939

My invention relates to airships of the lighter than air type and has special reference to rigid airships. With ships of this kind the gas bags are inserted inside of the rigid hull structure and an outer cover of textle is stretched over the hull.

Experiments have shown that there is a possibility of the outer cover being loaded with static electricity. When certain conditions are prevailing it may happen that the difference in electric tension or voltage between the outer face of the outer cover and the metal hull becomes so great that a discharge results creating electric sparks. This is of special danger with airships which are inflated with inflammable gas such as hydrogen for example.

For the purpose of having a smooth outer surface of the airships and reducing the air resistance to a minimum the outside of the outer cover is provided with one or several layers of lacquer, varnish or the like. The less these layers are conductive for electricity the greater is the possibility of a high electric charge being created between the outer surface of the outer cover and the metal hull structure.

According to my invention I increase the electric conductivity of the outer cover in its cross direction to an extraordinary degree by mixing to the lacquer before it is applied to the cover graphite. This admixture of graphite ought to be made before the varnish is applied to the textile cover preferably by admixing colloidal graphite solved in acetone. Experiments proved that about two percent admixture of graphite are sufficient to increase the cross conductivity a thousand times.

Of course, the varnish or lacquer may have the usual admixture of aluminum powder, besides, for the purpose of giving the airship a silver-white reflecting outer surface which means a desirable protection against heat rays entering the gas-inflated inner space of the ship. As normally a plurality of layers of varnish is applied to the outer cover it is advisable to provide the admixture of aluminum powder to the last of such layers.

It is astonishing that the admixture of graphite does not cause a remarkable increase in weight. It saves even partially the inner coat of paint in the upper part of the outer cover which is usual for the purpose of protection against light rays.

I do not want to be limited to the details described as several variations are possible without deviation from the scope of my invention.

ERICH HILLIGARDT.

Published May 11, 1943

Serial No. 286,688

ALIEN PROPERTY CUSTODIAN

AIR RAID AND LIKE SHELTERS

Otokar Ployer, Prague XIX, Czechoslovakia;
vested in the Alien Property Custodian

Application filed July 26, 1939

The invention relates to a construction of shelter in which inserts of deadening material are provided to prevent damage by penetrating projectiles. Concrete structures with inserts of metal are already known which are throughout of the same material but these have the disadvantage that the explosive action of any projectiles striking them is not absorbed. In addition such concrete structures have the disadvantage that they are very difficult to make. Although the idea of providing a shock absorbing effect by using loose inserted material is old, the proposal to make a combined filling in structures of the kind referred to with inserts of deadening material is novel.

By the invention the disadvantages of known shelters are avoided to a great extent and a construction is provided which can be very rapidly produced and will deaden the explosive effect of penetrating projectiles. This result is obtained in accordance with the invention by forming the shelter as a unitary structure of superposed metal frameworks, the members of which are partly filled with binding materials and partly with filling material. As binding material, cement, lime, mortar, asphalt, tar and the like can be used, while as the filling, sand, slag, paper, pulp, earth, loam, ashes, chemical absorption media, chloride of lime, charcoal, liquids, metal shavings or the like can be used.

Preferably, the metal frameworks with their filling are also stiffened by transverse struts. The use of filling material affords a great saving in binding material. At the same time the binding operation is accelerated. Moreover the deadening effect is obtained by the filling material. A further advantage of the invention resides in this that it is possible to construct for example concrete structures with rooms or chambers of suitable kind and form. The separate cells of the framework form with one another a monolithic structure.

Several examples of constructions in accordance with the invention are illustrated in the accompanying drawing, in which Fig. 1 is a construction of shelter in section.

Fig. 2 a detail of assemblies of metal frameworks and filling,

Figs. 3 to 7 are sections of further constructions in accordance with the invention.

The shelter consists essentially of the solid walls E, C and A and of the room or chamber D formed thereby. The parts A and C form the roof and have between them a layer of deadening material B. The whole structure is formed of superposed metal frameworks F. According to the invention these are partly filled with binding material E. The shock absorbing insert is of filling material.

In addition the separate frameworks are stiffened by transverse struts G (wires, iron rods, bars or the like). The most varied materials may be employed as binding materials and also as filling materials. In superposing the frameworks F on one another they may be offset in relation to one another or may fit in one another and if desired be secured against relative movement. The separate frames of the metal frameworks are completely filled with materials. In erection the frameworks are placed on one another in two or three rows and filled at the same time with binding material or with filling materials. The filling material and frameworks are built up at the same time so that it will be certain that actually all of the chambers are filled with materials. The possibility is thus afforded by offsetting and shifting the frameworks of producing suitable forms of structures.

In Figs. 2 to 6 different constructions are shown in which the inserts of deadening material are suitably selected and the chambers D present the most varied forms.

OTOKAR PLOYER.

PUBLISHED
MAY 11, 1943.
BY A. P. C.

O. PLOYER
AIR RAID AND LIKE SHELTERS
Filed July 26, 1939

Serial No.
286,688
2 Sheets-Sheet 1

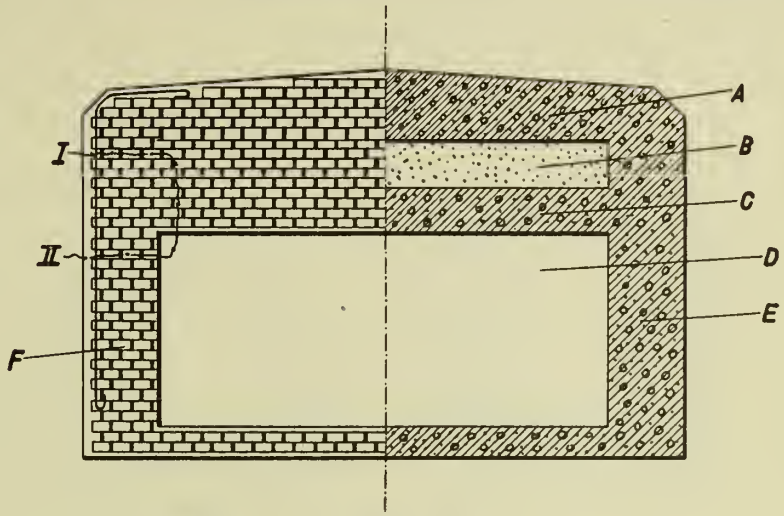

FIG. 1.

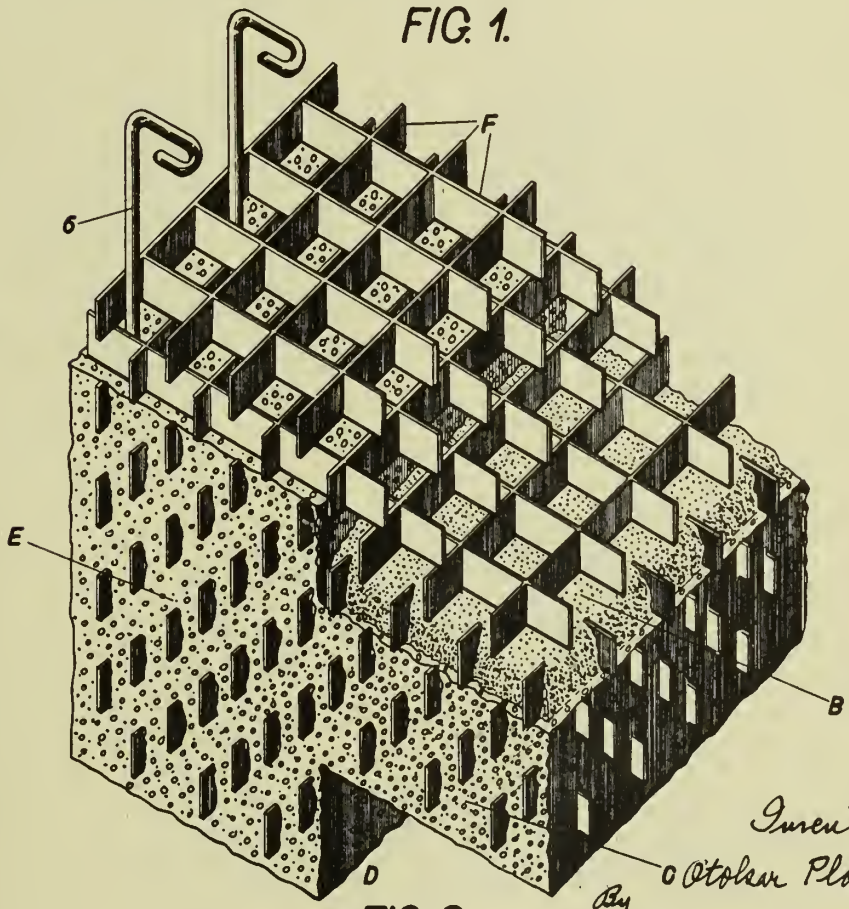

FIG. 2.

Inventor
Otokar Ployer
By
Singer, Ehlert, Stern & Carlberg
attys.

PUBLISHED
MAY 11, 1943.
BY A. P. C.

O. PLOYER
AIR RAID AND LIKE SHELTERS
Filed July 26, 1939

Serial No.
286,688
2 Sheets-Sheet 2

FIG. 3.

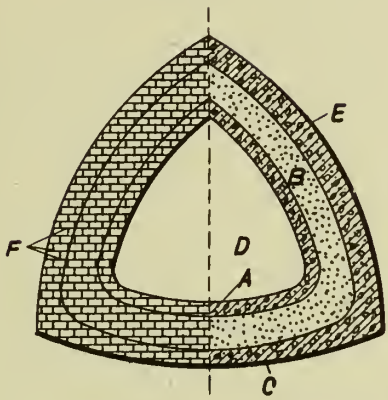

FIG. 4.

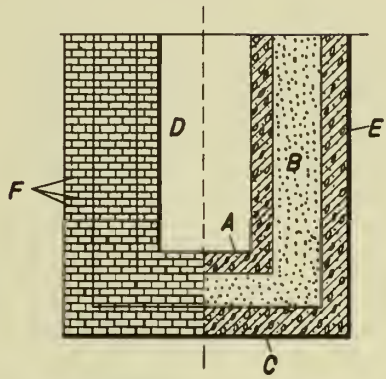

FIG. 5.

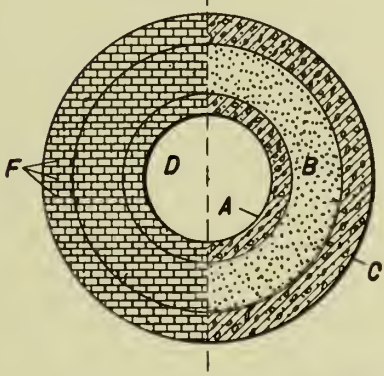

FIG. 6.

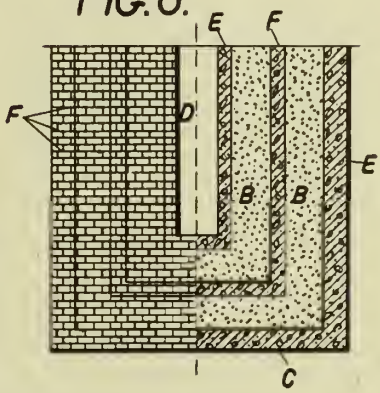

FIG. 7.

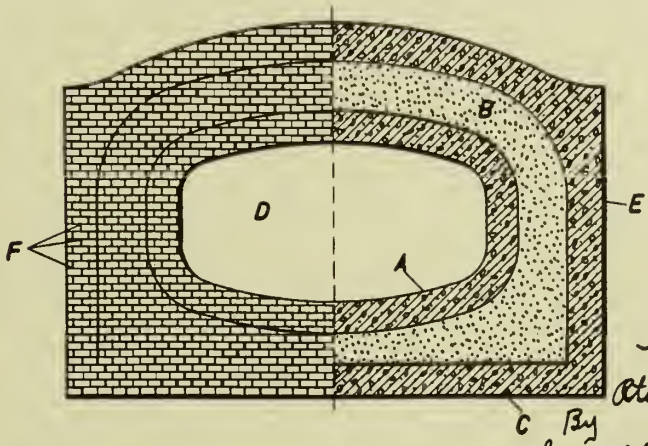

Inventor
Otakar Ployer
By
Singer, Elbert, Stern & Cauldy
Attys.

Published May 11, 1943 Serial No. 286,803

ALIEN PROPERTY CUSTODIAN

METHODS OF INSULATING METAL SURFACES

John Langbein, Hamburg 23, Germany; vested in the Alien Property Custodian

No Drawing. Application filed July 27, 1939

This invention relates to a method of insulating metal surfaces in particular the surfaces of pipes, cables and the like and in accordance with the invention three insulating layers are applied in succession to the metal surface to be insulated.

For insulating pipes and the like spreadable masses consisting of pitch, bitumen, resin, sulphur solution as well as tarred rope and the like have hitherto been chiefly employed. When such insulating materials were used it was found that they became brittle or saponified and did not remain elastic even if oil or other softening agents were added to them. These faults are eliminated by the present invention in that the insulation of the metal surfaces is effected by a plurality of insulating layers which are applied one after the other and of which each fulfils a separate purpose.

The first layer must be very elastic in order to be able to withstand the expansions of the metal surface. Further the first layer must be very resistant to chemical influences without becoming brittle or to hardening, as is the case for example with rubber, rubber compounds, tar and so forth. The second layer must be hard, waterproof and extremely resistant to attack by external chemical influences and must not become corroded even after a long time. The third layer must be acid resistant. When three such layers have been applied the metal surface is perfectly insulated against all external influences which may be encountered.

If, in view of the conditions to which the insulated metal surfaces are to be exposed the second or the third layer is not necessary, it may, of course, be omitted. Thus, for example for the external insulation of pipes the acid resistant layer can be omitted if the pipes are not exposed on the outside to any attack by acids. Again, for the internal insulation of pipes the hard waterproof coating can be omitted since the pipes are not normally exposed on the inside to any corrosive attack by alkaline earths, water or the like. In all cases, however, the elastic coating which is resistant to chemical influences is necessary.

The following is an example of the method of manufacturing a mass which is suitable for forming the first layer or coating.

	Parts by weight
An acid-resistant condensation product, which may be made, for example, from maleic acid or acetylene, dichlorethan, polym. hydro-carbons, is dissolved in polymerised wool fat. Polymerised wool fat as distinguished from commercial wool fat has very great resistance to chemical influences	1.5–2
Sulphonated asphalt	1 –1.5
A mixture of dibutyl phthalate with vaseline	0.1–0.3

These materials are mixed and heated and chlorine gas is passed through and caused to enter into reaction or a corresponding amount of chloride of lime is added. There is thus formed a tough elastic mass which is then mixed with 0.8–1.5 parts by weight of very finely ground and washed asbestos fibre and glass wool and dissolved in the usual solvents. The viscous mass obtained is applied to the pipes or the like and on it is wound by means of a suitable apparatus a band of insulating material made of a mineral fabric, for example glass fabric, which may also be coated with the insulating mass.

The following is an example of the method of manufacturing a mass suitable for forming the second layer.

0.400–0.800 parts by weight of a condensation product of phthalic acid anhydride and glycerine are dissolved in sulphonated ammonium oleate and mixed with 1.–1.5 parts by weight of a colloidal solution of potassium or sodium fluoride and silicon hydroxide, to which is added a dissolved lead compound, which may be obtained in accordance with the equations

$$Pb(NO_3)_2+2NaOH=Pb(OH)_2+2NaNO_3$$
$$Pb(OH)^2+NaOH=Pb(OH)(ONa)+H_2O$$

This mixture is diluted with 5–10 times the quantity of water and mixed with cement (ore cement) and sand or asbestos and applied thickly to the pipes, in some cases with wire fabric. It is advantageous, however, to embed the pipes or the like completely in the mass, expansion joints being preferably provided. The expansion joints are later filled with the aforesaid elastic mass.

This fluorine-lead-cement mixture is resistant to alkaline earths and to corrosive liquids. The constituents set to form a solid dense mass which protects the iron. Pipes or the like which have already been damaged by rust can be preserved for years by means of the aforesaid insulation.

The following is an example of the manner in which a mass suitable for forming the third layer can be made.

A mixture is made of about equal parts of a finely washed asbestos fibre, quartz powder, barium sulphate, sodium aluminium fluoride, a small percentage of ammonium persulphate, lead oxide and 1–2 parts of ammonium tri-borate silicate powder or silicate solution. This mixture is dissolved in water or soap suds so that it is capable of being spread or painted on. If a greater proportion of sodium-aluminium fluoride is added the mass becomes capable of being polished. The ammonium persulphate and lead oxide accelerate the setting and make the mass insoluble. The ammonium triborate has a similar effect and also reduces the excess of alkali without precipitating the silicic acid. The mixture has the property of adhering particularly

well. Filling agents such as granulated cork or the like can also be added, in particular when the mass is used for external insulation.

For gas pipes which carry neutral or weakly acid gases an insulation with the first layer is sufficient. If, however, the gases contain stronger acids the last coat of the first layer is dusted with coarse sand and the third and acid resistant layer is applied or is sprayed on by means of compressed air.

For external insulation the first layer alone may be sufficient but in most cases the bottom of the pipe or the like will contain alkaline earths, solids or the like in which case the hard resistant second layer must be applied to the elastic insulation. If attack by acid from the outside is also likely to occur the third acid resistant layer is also applied.

In some cases pipes which are insulated with the first layer can also be laid directly in the second layer.

JOHN LANGBEIN.

Published May 11, 1943

Serial No. 287,832

ALIEN PROPERTY CUSTODIAN

MOTOR-DRIVEN CHAIN SAWS

Fritz Seibel, Essen-Ruhr, Germany; vested in the Alien Property Custodian

Application filed August 1, 1939

The invention relates to motor driven chain saws for wood cutting, for example for using in felling trees, cutting mine props and the like, the motor being generally an electromotor, compressed air motor, or internal combustion motor. It is a common practice in connection with such saws to have a gear box rigidly fixed to the frame carrying the saw, the box being either permanently or detachably fixed, and a stub axle projecting from the gear box being coupled with end of the motor shaft, which projects from a motor casing having a handle or handles for manipulating the saw.

According to my invention there is interposed, between the gear box and the motor, a smooth, detachable tube enclosing a transmission shaft and adapted to serve as a handle, sometimes as a handle additional to a handle on the motor casing. The tube is preferably approximately in line with the saw and is very conveniently placed for supporting the weight of the saw frame. If the motor is fixed to the tube and also has a handle the user can grasp that handle with one hand and the tube with the other. As the tube is more or less centrally placed practically all the weight can be supported by the hand grasping it, the other hand being merely used for guiding the saw. For making an inclined cut a twist is given to the handle on the motor casing, and the tube rotates in the hand holding it.

The tube may be so coupled with the gear box that it can easily be disconnected, together with the transmission shaft inside it, in order to enable a tube and shaft of a different length to be substituted. Thus for example an exceptionally long tube may be substituted for one of moderate length in order to enable the user to stand at a considerable distance from the work, thus avoiding risk of accident.

The transmission shaft within the tube may with advantage be composed of a helical spring coiled upon a rod or tube and coupled at its ends with the driving shaft and the gear in the gear box. The coiled spring transmits the drive, and the rod supports it and keeps it straight. This elastic drive is very useful in cases where the motor is stopped through some accident such as the binding of the saw. With a shaft incapable of much torsion it may then be difficult to re-start the motor, whereas there is no such difficulty with the helical spring. The use of this spring makes it in fact possible to use a motor of substantially less power than would be necessary with a rigid shaft, because it is not necessary to have so much margin of power for starting under load. The spindle on which the spring is coiled may with advantage be elastically compressible, or have an elastic sheath, e. g. of india rubber, so that it yields somewhat when the diameter of the helix is substantially reduced by torsion, as when starting the motor. The spindle may for example be a longitudinally slotted steel tube.

The transmission shaft in the tube may be coupled with a flexible shaft connecting it to the motor shaft, as for example where it is desirable to place the motor at a substantial distance from the work, or where it is necessary to use the saw under water.

Two embodiments of the invention are shown in the accompanying drawing, in Figs. 1 to 3 and in Fig. 4 respectively.

Fig. 1 is an elevation of the apparatus, and

Fig. 2 a sectional view, to a larger scale, showing the coupling between the motor shaft and the transmission shaft.

Fig. 3 is likewise a sectional view, to the same scale as Fig. 2, showing the coupling between the transmission shaft and the gear in the gear box.

Fig. 4 is an elevation, partly in section, showing an embodiment with a flexible transmission shaft.

Referring first to the construction shown in Figs. 1 to 3, 1 is the motor, 2 the gear box, 3 the bevel gearing in the gear box, and 4 the chain saw. The motor may be a compressed air motor, for example of the rotary piston type. The motor casing is connected to the gear box by a rigid, straight and smooth tube 5 enclosing the transmission shaft. There is a handle 6 fixed to the motor casing, with the compressed air supply valve 7 close thereto.

For connection with the tube 5 the motor casing has a tubular neck 8, and a screw threaded sleeve 9 couples the sleeve with this neck. At the opposite end the tube 5 is screwed into a tubular boss on the gear box 2. The tube 5 can, accordingly, easily be disconnected from the gear box and the motor if desired.

For transmitting the drive from the motor to the gearing 3 there is within the tube 5 a tubular spindle 10 with a helical spring 11 coiled thereon. The ends of the spring are screwed into sockets 12 and 13 respectively, and these sockets have tongues 14 and 15 respectively. The tongue 14 engages into a slot in the end 16 of the motor shaft, and the tongue 15 engages into a slot in the short shaft of one of the bevel gears.

It will be clear that the tube 5 with the spindle 10 and spring 11 can be disconnected quite easily from the motor and gear box, in order to substitute a tube, spindle and spring of a different length, the change requiring no more than a few minutes.

In the embodiment shown in Fig. 4 an internal combustion motor 1 is connected by a flexible shaft 19 to one end of the transmission shaft in the tube 5. The transmission shaft is similar to that described with reference to Figs. 2 and 3, and the coupling between it and the flexible shaft is likewise similar. The flexible shaft which may be of any desired length, is within a flexible metal sheath 20, which does not rotate with it and is detachably connected to the motor casing and the tube 5.

FRITZ SEIBEL.

PUBLISHED
MAY 11, 1943.
BY A. P. C.

F. SEIBEL
MOTOR-DRIVEN CHAIN SAWS
Filed Aug. 1, 1939

Serial No.
287,832
2 Sheets-Sheet 1

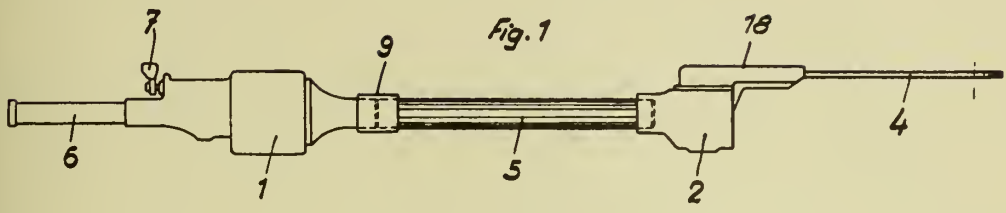

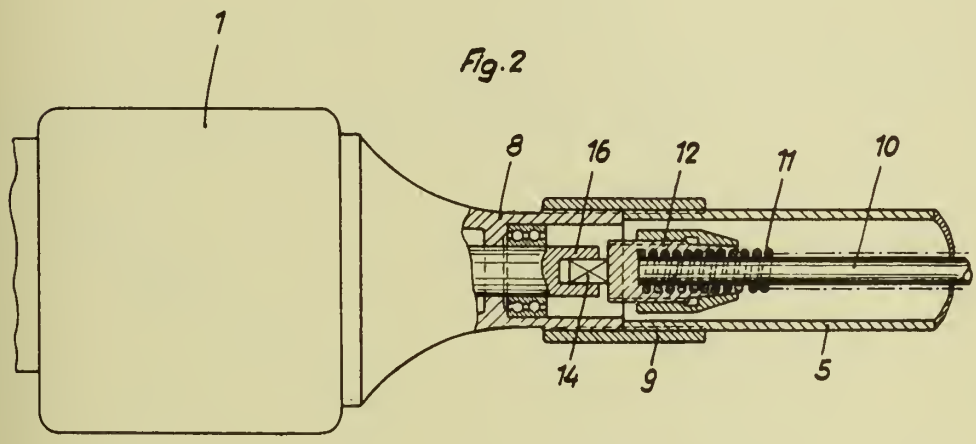

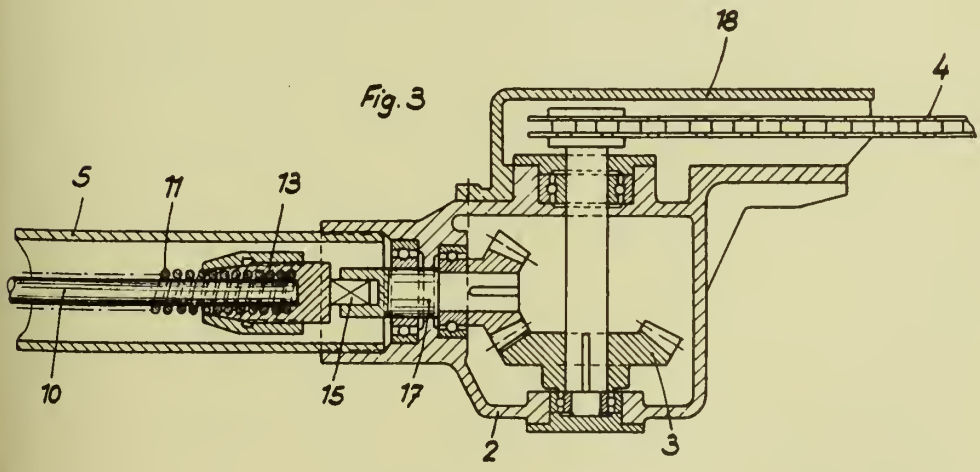

Inventor:
Fritz Seibel
By Young, Emery & Thompson
Attorneys

PUBLISHED

MAY 11, 1943.

BY A. P. C.

F. SEIBEL

MOTOR-DRIVEN CHAIN SAWS

Filed Aug. 1, 1939

Serial No.

287,832

2 Sheets-Sheet 2

Fig. 4

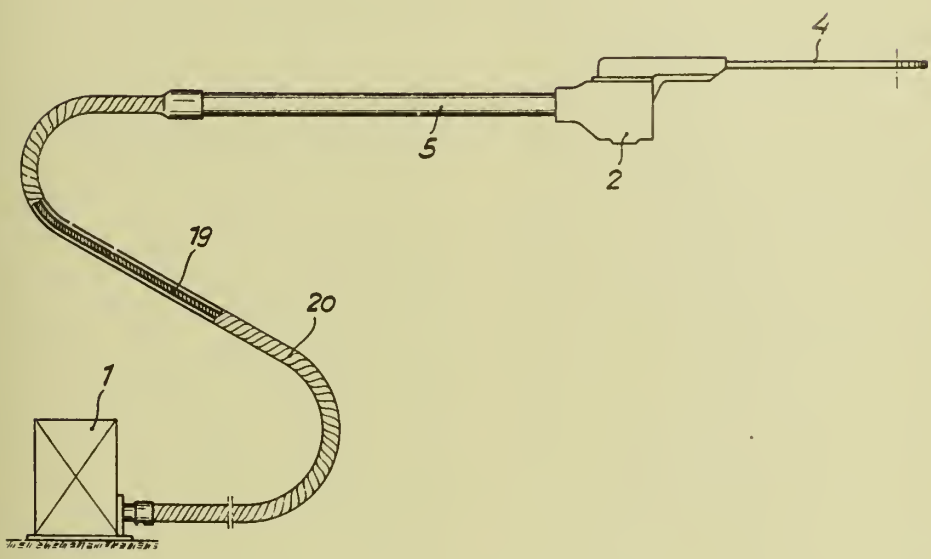

Inventor:
Fritz Seibel
By Young, Emery & Thompson
Attorneys

Published May 11, 1943

Serial No. 288,942

ALIEN PROPERTY CUSTODIAN

LIQUID PUMPS

Oskar Posch, Stuttgart-Bad-Cannstatt, Germany; vested in the Alien Property Custodian

Application filed August 8, 1939

These improvements in liquid pumps, particularly concern fuel-injection pumps for internal combustion engines.

One object is to attain greater reliability of operation and more accurate dosage of the liquid to be delivered, particularly when fuel has to be injected in very small quantities. In this connection it is important to prevent the occurrence or collection in the pump of vapour or air bubbles which would otherwise form an elastic cushion. Such cushions when compressed and re-expanded in the cycle of piston movement, are liable to impair or even completely interrupt the pump delivery.

The invention provides a pump, wherein the delivery of fuel is performed by two co-axial pump pistons displaceable relatively to each other, one of the two pistons preferably being mechanically driven whilst the other piston is loaded by spring pressure which tends to bring the opposed ends of the two pistons into non-positive contact. Suction is effected by the movement apart of the pistons, one of the two pistons being preferably held by an abutment, and delivery is effected by the movement towards each other of the two pump pistons, and particularly under the pressure of the spring loading after the opening of the outlet passage. The opposed end surfaces of the two pump pistons enclosing the pump chamber between them are so constructed and machined that when they encounter each other at the end of the pressure stroke they bear on each other completely closely so that no harmful space remains between them.

A further object of the invention is to provide a graduated and progressive spring loading whereby the two pistons ends aforesaid are brought into non-positive contact, particularly so that the full maximum loading determining the delivery pressure commences only shortly before the opening of the pressure outlet passage whilst otherwise only a comparatively slight spring loading exists. This results in increased reliability and accuracy of operation by reason of the sparing of the pump parts and reduction of the leakage losses. Also adjustments to be performed under some circumstances upon the pump parts are facilitated.

Another object is the provision of a special relief passage giving an abrupt termination of the delivery so that dripping of the fuel at the injection nozzle, is avoided particularly when long delivery ducts are present. The relief passage is preferably controlled by one of the two pistons, for example by means of a controlling groove which is separate from the pump chamber and establishes communication between the pump outlet to the relief passage. The relief may occur before or after the termination of the pressure stroke of the positively driven pump piston. In the former case, the controlling groove is preferably arranged in the positively driven piston and in the latter case preferably in the non-positively moved piston.

In order to achieve at high speeds, a reduction of the quantity injected per stroke, as is desirable for the sake of torque constancy, provision is made for throttling the fuel flowing from the pump to the injection nozzle occurs at higher speeds. The throttling means may be adjustable, and may take the form of a changeable or adjustable throttling plate.

Yet another object is the provision of appropriate means for regulating the quantity delivered or the timing of the delivery and in particular, the termination of delivery, that is the termination of the injection period in the case of injection pumps. However the commencement of delivery and the termination of delivery may also be controllable simultaneously. The regulation of the termination of delivery is preferably performed by means of an inclined edge of a controlling groove provided in one of the two pump pistons for controlling the relief passage, the piston being rotatably adjustable for varying the control exercised by the inclined edge.

Further features and objects of the invention will appear from the following description with reference to the annexed drawings wherein:

Figure 1 is a vertical section of one form of pump in accordance with the invention,

Figures 2 and 3 illustrate modifications of Figure 1,

Figure 4 is a fragmentary view illustrating a modification of Figure 3,

Figures 5 and 6 are vertical sections of still further modifications, and

Figures 7 and 8 are diagrams illustrating pump deliveries under different controls.

In Figure 1, two pump rams or pistons 2 and 3 acting against each other are arranged co-axially in a cylinder body 1. The pump piston 2, which is shown in its lower dead-centre position, is driven by a cam 4, designed in accordance with the desired injection law, and a return spring 5. The pump piston 3 is loaded, in the position illustrated, by a comparatively weak spring 6 which presses it by means of its collar 7 against an axially adjustable abutment 8. For example, the abutment may be adjustable by screwing it

up or down in the recess in which it is inserted. A stronger spring 9 only comes in to action upon the pump piston 3 when the latter has risen by the amount x, at which moment the abutment collar 10 is lifted from the cylinder housing 1 by the collar 7 of the piston. The springs 6 and 9 abut at their upper ends against an upper part 11 which is rigidly connected to the cylinder housing 1. In the drawing, the annular abutment 8 is set so that the pump chamber 14 formed between the end surface 12 of the lower piston 2 and the end surface 13 of the upper piston 3 has an axial length y in the lower dead-centre position of the driven piston 3. The suction or inlet port 15 is then uncovered and the pressure or outlet port 16 is closed. There may be several of each of these ports. For the axial adjustment of the annular abutment 8, a displaceable rack 8a may engage teeth on the annular abutment.

The manner of operation is as follows:—

If the pump piston 2 is moved upwardly by the cam 4, then after passing over the suction passage or passages 15, it forces the quantity of fuel located in the pump chamber 14 against the end surface 13 of the pump piston 3. Up to this moment, only the opposing pressure of the spring 6 acts against the upward movement of the pump piston 3. Shortly before the pump piston 3, during its upward movement, opens the pressure passage or passages 16, the collar 7 on the pump piston 3, after a movement x thereof, comes into contact with the abutment 10 subject to the loading of the spring 9. Upon the further upward movement of the pump piston 2, the pressure of liquid in chamber 14 must rise to such an extent as to overcome the opposing pressure of the two springs 6 and 9. Thereafter, the pump piston 3 also rises further and finally opens the outlet 16, the liquid fuel then passing into the outlet 16 under the maximum pressure just reached. Such maximum pressure is determined by the force of the two springs 6 and 9 and can be varied within very wide limits by changing the springs or varying their force. Preferably, the upper dead-centre position of the pump piston 2 is so determined that its end surface 12 in this dead-centre position reaches precisely to the level of the outlet 16.

The delivery terminates when the pump piston 3 has forced into the outlet 16 the last residue of the quantity of fuel located between the end surfaces 12 and 13. In order to ensure that even the last trace of a quantity of fuel still present is actually delivered and that the pump is actually free from any harmful space, the end surfaces 12 and 13 are ground one on the other. Upon their contact at the end of the pressure stroke, therefore, vapour or air bubbles, irrespective of what proportion they may have, are forced through the outlet 16 so that the subsequent pumping action is not interfered with by the presence of such vapour or air bubbles. Consequently the use of an additional feed pump, for example, is unnecessary, as also is the provision of a de-aerating screw without which the removal of vapour or air bubbles is not possible in pump systems already known.

Upon the downward movement of the pump piston 2 after the delivery, the pump piston 3 follows the same in its downward movement under the influence of the springs 6 and 9 until finally the abutment 10 bears upon the cylinder housing 1 and, after a further movement x, the collar 7 provided on the pump piston 3 bears upon the annular abutment 8 which is adjustable as to its level but is normally fixed. During the further downward movement of the pump piston 2, the pump piston 3 can no longer follow the said movement, the end surfaces 13 and 12 separate from each other again and first of all an absolute vacuum is formed between them which is not disturbed by the presence of vapours, as every trace of fuel residues has been previously removed. When, in the course of the further downward movement, the suction passage 15 is opened by the pump piston 2, then fresh fuel flows into the pump chamber 14 under the influence of the full atmospheric pressure. As already explained, the dimension (y) of the pump chamber 14 and the quantity of fuel sucked in, are determined by the abutment 8. Thus the quantity of fuel delivered can be regulated in simple and reliable fashion by variation of the level of the abutment 8. Owing to the fact that the member controlling the pressure passage 16, namely the pump piston 3, acts after the fashion of a slide valve, it is not possible for it to partake, of harmful resonance oscillations in the pressure passage such as poppet valves, for example, are liable to suffer. This is of decisive importance particularly at very high revolution speeds (5,000 to 10,000 injections per minute). Furthermore the subject of the present invention, by reason of this arrangement, is particularly suitable for the operation of open injection nozzles.

The stepwise increase of the spring loading of the pump piston 3 by the additional cutting in of the further spring 9 shortly before the opening of the pressure passage 16 has the following advantages: Firstly the full spring pressure which is necessary for the attainment of the maximum delivery pressure never bears upon the abutment 8 and creates no difficulty in the adjustment of such abutment. Furthermore, the leakage loss between the pump pistons and the cylinder is reduced to a minimum by the stepwise increase of the pressure, because a low liquid pressure corresponding to the weak spring 6 obtains in the fuel in the pump chamber 14 over the largest part of the pump stroke. Only at the last instant does the liquid pressure rise to its maximum value so that the harmful effect of the leakage loss cannot develop to the extent known in other pump systems in the short period only which thereafter remains.

In Figures 2–6, similar or corresponding parts are indicated by the same reference numerals as in Figure 1.

In Figure 2, the pump is illustrated in the first part of the downward stroke of the two pistons and is essentially the same as that in Fig. 1. It differs in respect of the upper pump piston 3 which is provided with a constriction passage or relief groove 17 which, after the piston 3 has executed a short portion of the downward stroke, establishes communication between the outlet 16 and a relief passage 18. The latter preferably leads back to the fuel tank, so that the fuel present in excess in the delivery (such excess being due to the elasticity of the injection ducts and the compressibility of the fuel) can pass back into the tank for example by the shortest path. This arrangement gives instant relief in the outlet 16.

In Fig. 3, wherein the pump pistons are shown in the upper dead-centre, another mode of relief is illustrated. There is provided on the lower piston 2, at a point which does not come into contact with the suction passage 15 in the upward stroke, (that is a point distant from the end sur-

face 12 of the lower piston 2 by more than the depth of stroke,) a constriction 19 which opens the relief-connection passage 20 shortly before the upper dead-centre position of the lower piston 2. The constriction 19 then connects the pressure passage 16 to the relief passage 18 leading back to the fuel tank 21, whereby there is instantaneous relief of pressure in the outlet 16. This mode of relief, in comparison with that illustrated in Fig. 2, has the advantage that the relief and, consequently, the termination of injection take place shortly before the upper dead-centre position of the lower piston 2. Thus that part of the injection is cut out which, owing to the already de-celerated piston movement, would otherwise result in a lingering injection which might cause dripping at the injection nozzle.

Furthermore, as illustrated in Fig. 3, a throttling plate 22, preferably changeable, is provided in the pressure passage 16 beyond the branching point of the passage 20. Its manner of operation is as follows:

During delivery, the fuel is forced to pass through the narrow bore in the small nozzle plate 22, since the relief-connection passage 20 is still closed by the pump piston 2. At low revolution speeds, there is sufficient time available for the whole of the fuel charge to penetrate through the narrow bore in the nozzle plate 22. Shortly before the upper dead-centre position of the pump piston 2, the throat-like constriction 19 opens the relief-connection passage 20, whereby an instantaneous relief of pressure in the outlet 16 takes place. At high revolution speeds, on the other hand, the time does not suffice for the flow through the nozzle plate 22 and residual fuel remains between the end surfaces 12 and 13 of the two pistons. By the subsequent relief action, however, the fuel situated between the end surfaces 12 and 13 is completely discharged under the pressure of the springs 6 and 9 through the relief-connection passage 20, the constriction 19 and the relief passage 18 until the end surfaces 12, 13 bear on each other closely and without any intervening space.

The throttling plate 22 may also be advantageously employed in a form of construction in accordance with Fig. 2 wherein the relief passage is controlled by the upper spring-loaded piston 3 and the delivery continues beyond the upper dead centre of the driven lower piston 2.

Fig. 4, illustrates a loading spring 23 which may be substituted for the springs 6 and 9 in any one of the preceding examples. The spring 23 has a spring characteristic which is obtained by reason of the fact that it has different coil diameters. By this means, fluttering phenomena, such as occur with cylindrical springs for example, are suppressed since the parts of the volute spring 23 vibrating with different natural frequencies interfere with each other in the development of oscillations. The employment of progressive springs, such as 23, enables the abutment 10 illustrated in Figs. 1 to 3 to be dispensed with. This is desirable because it gives rise to the production of noise owing to its hammering mode of operation.

In Fig. 5, there is an inlet valve 25 loaded by a spring 24 in the suction passage 15. The inflowing fuel is placed under pressure by a pump 27 in front of the inlet and constructed in any desired manner, so that the fuel is supplied into the pump chamber under pressure. The inlet valve is thus constructed as a non-return valve to permit flow into the pump chamber but not in the reverse direction. In order to give light fuels no opportunity to vaporize, the mouth 26 of the suction passage is made sufficiently wide and is so arranged that the end surfaces 12 and 13 of the pump pistons 2 and 3 separate opposite this mouth at the commencement of the suction stroke, that is when the collar 7 rests upon the abutment 8. By this means, any formation of vacuum is avoided and the fuel flowing in under pressure passes into the pump chamber, unseating the valve 25 (for example a ball or disc valve) against the loading of the spring 24. During the subsequent upward movement of the pump piston 2, the inlet valve 25 closes and prevents a return flow of the fuel into the suction passage, whereby any pulsatory liquid movement which might give rise to local bubble formation is avoided.

The employment of a feed pump 27 is primarily useful for very light fuels. Owing to the fact that the suction or inlet passage is subjected to pressure, the boiling or vaporising point of the liquid therein also rises. It is then possible to set the pump for a maximum delivery pressure which is made so high that the temperatures occurring in operation lie below the boiling temperature of the fuel subjected to the pressure in question so that formation of vapour in the suction passage is prevented. The operation of the pump is thereby further improved. Preferably, when a feed pump is employed, the inlet valve 25 is also provided in order to prevent a pulsatory liquid movement in the passage 15. However, in some cases, the inlet valve may also be dispensed with for reason of simplicity.

In Fig. 6, the controlling groove 19 is provided with an inclined controlling edge 28. Furthermore, the pump piston 2 can be turned about its axis through a certain angle, for example by a displaceable rod which engages by means of a pin in a fork 30 on the piston. Upon upward movement of the piston 2, the fuel situated in the pump chamber 3 is delivered under pressure, after opening of the outlet 16, until the inclined controlling edge 28, is cut in the pressure piston 2 passes over the relief passage 20. Thereupon an abrupt relief of the pressure in the pump chamber and in the outlet 16 takes place. The manner of operation of an inclined controlling edge such as 28 is known. By turning the pressure piston 2, the time of the commencement of the relief may be influenced at will and consequently the delivery can be interrupted earlier or later. The commencement of delivery may then remain unaltered. By this means, a gradual and stepless variation of the quantities delivered and injected is made possible.

However, if desired, the commencement of injection may be regulated as well as the termination of injection. For this purpose, for example, use is made of the axially adjustable abutment 8 which serves, in the previously described manner, for the limitation of the movement of the piston 3 and by adjustment of which the time at which the outlet 16 is connected to the pump chamber 14 is determined.

Since the quantity of fuel entering at 15 is dependent upon the limitation of the stroke of the controlling piston 3 in its downward movement, it is possible to regulate the quantity of fuel delivered to the injection nozzles of an internal combustion engine both by rotatably adjusting the piston 2 and also by adjusting the level of the abutment 8, the termination of injection being varied in the former case and the commencement of injection in the latter case.

These two regulating possibilities are illustrated in the diagrams according to Figs. 7 and 8 in which the quantity Q delivered is plotted against the crank angle or the time α. In Figure 7, A, indicates the commencement of injection and E, E^{I}, E^{II}, E^{III} the termination of injection for different adjustments.

In Figure 8, A, A^{I}, A^{II}, A^{III}, indicate different commencements of the injection for several adjustments and E indicates the abrupt termination thereof.

In injection-type internal combustion engines with widely varying revolution speed, it is desirable to be able to vary the injection timing as desired. By the simultaneous use of the two modes of regulation described above, it is possible to shift the injection period as desired, without thereby varying the quantity injected, this is accomplished by adjusting both the commencement of injection and also the termination of injection to an earlier or later time. However, the commencement of injection and the termination of injection may be varied differently, or only the one or the other may be varied at one time, it being possible also to suit the time of injection to the loading for the time being.

For common adjustment of the abutment 8 and piston 2 by means of the regulating rods 8A and 29 thereof, these latter may be coupled together. In some cases, the adjustability of the abutment 8 may be dispensed with. Furthermore, a spring 6 in every case may be replaced by a spring 23, or by two springs 6 and 9, or by other suitable resilient means. Finally, a throttling plate 22 or similar throttling device may be arranged in the pressure passage, for example, of any of the constructions.

OSKAR POSCH.

PUBLISHED
MAY 11, 1943.
BY A. P. C.

O. POSCH
LIQUID PUMPS
Filed Aug. 8, 1939

Serial No.
288,942
4 Sheets-Sheet 1

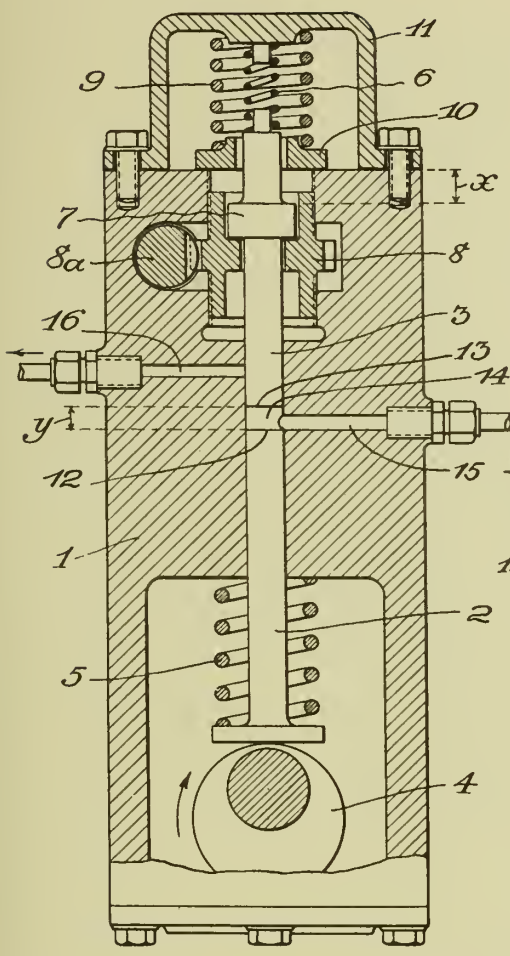

Fig. 1.

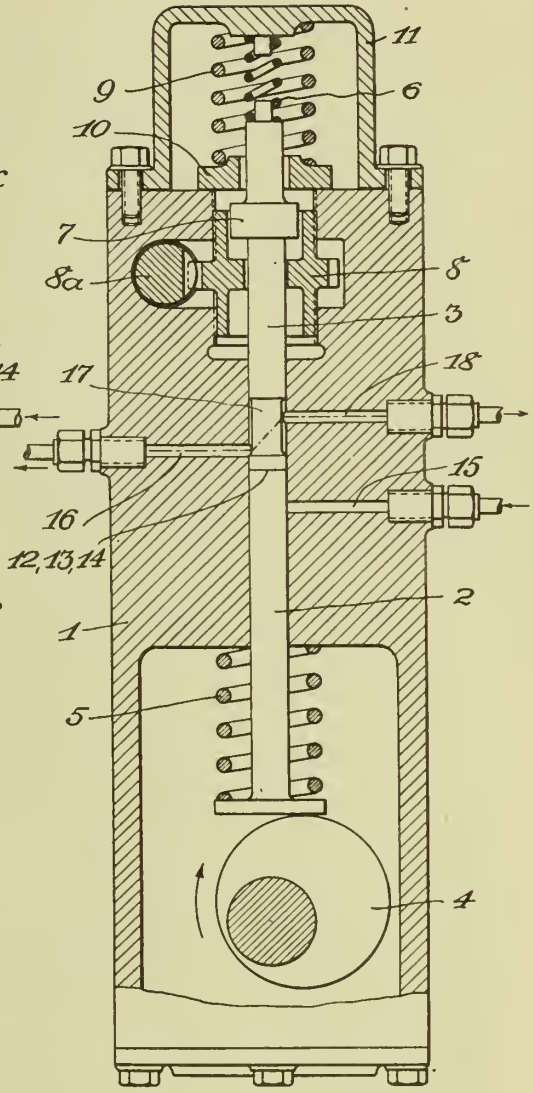

Fig. 2.

INVENTOR
OSKAR POSCH
BY A. G. Hinchey
Morrell Rumm Jr.
ATTORNEYS

PUBLISHED

MAY 11, 1943.

BY A. P. C.

O. POSCH

LIQUID PUMPS

Filed Aug. 8, 1939

Serial No.

288,942

4 Sheets-Sheet 2

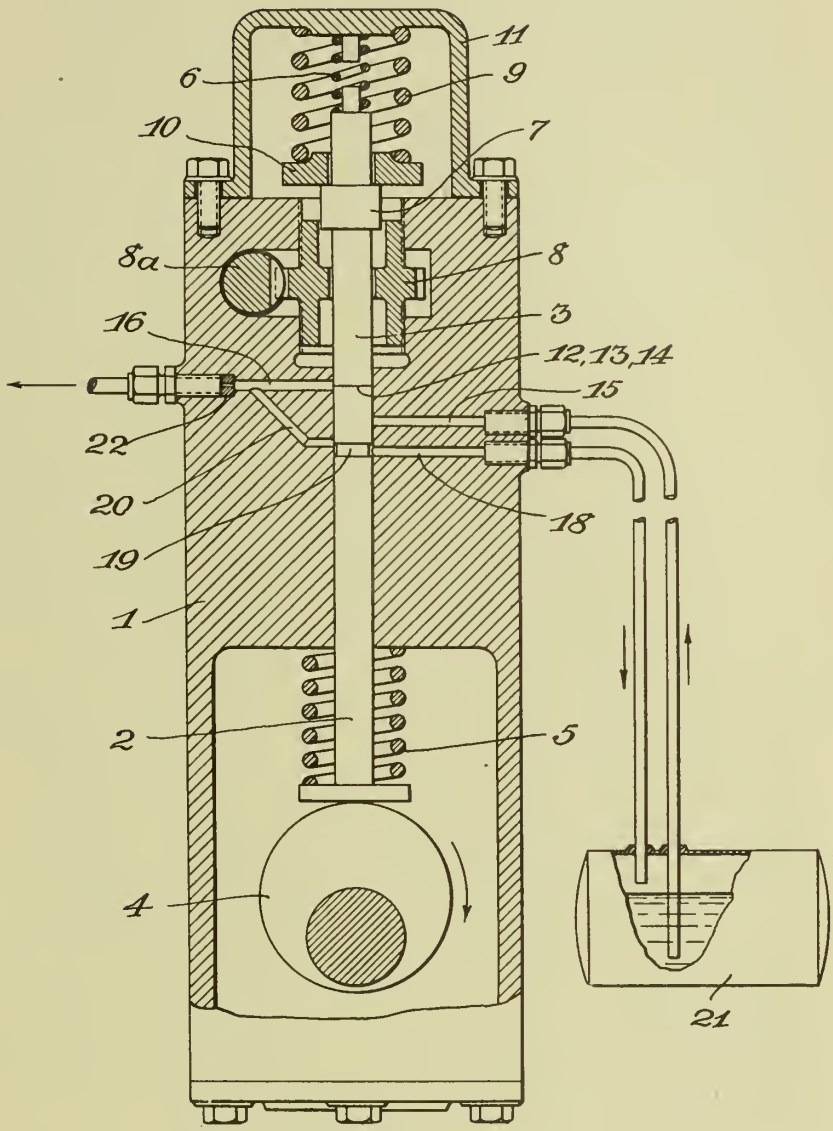

Fig. 3.

INVENTOR

OSKAR POSCH

BY A. A. Wicker

O. Merell Remy Jr.

ATTORNEYS

PUBLISHED
MAY 11, 1943.
BY A. P. C.

O. POSCH
LIQUID PUMPS
Filed Aug. 8, 1939

Serial No.
288,942
4 Sheets-Sheet 3

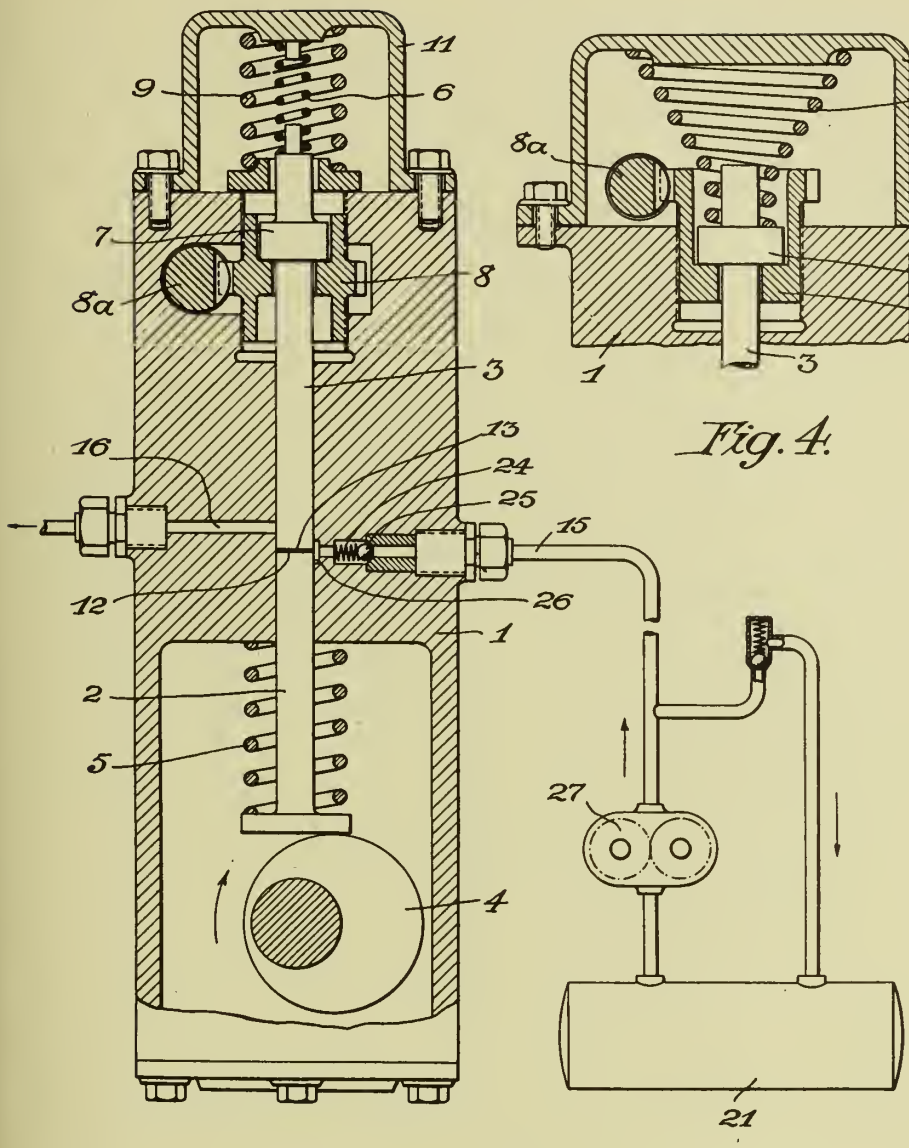

Fig. 5.

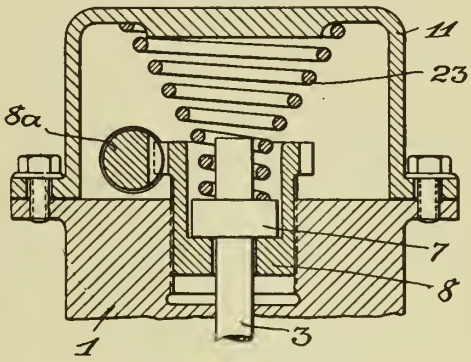

Fig. 4.

INVENTOR
OSKAR POSCH
BY A. A. Lieber
Morrell Rauch, Jr.
ATTORNEYS

PUBLISHED
MAY 11, 1943.
BY A. P. C.

O. POSCH
LIQUID PUMPS
Filed Aug. 8, 1939

Serial No.
288,942
4 Sheets-Sheet 4

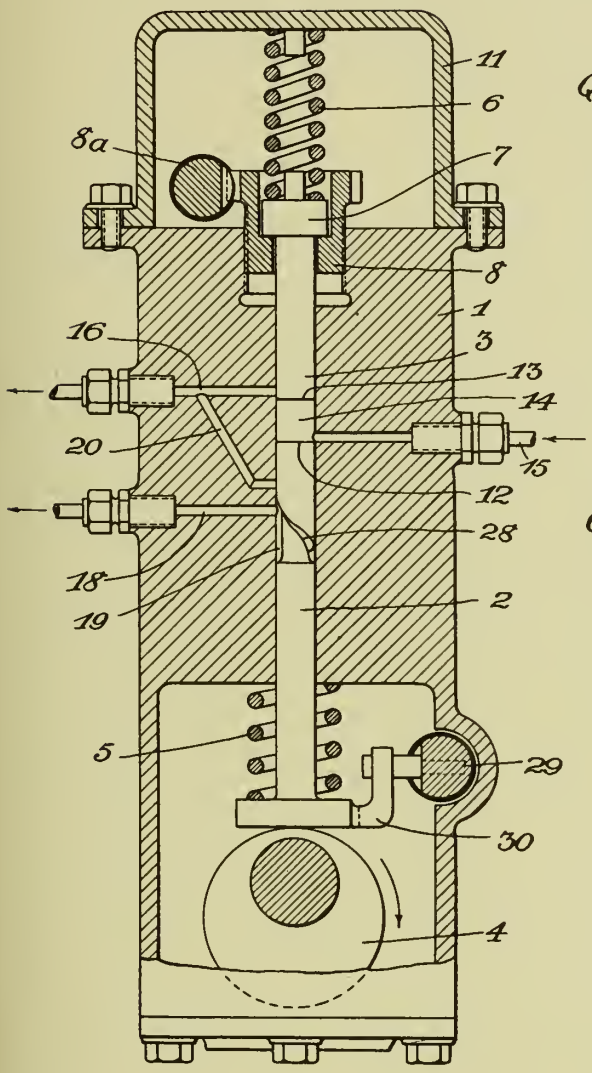

Fig. 6.

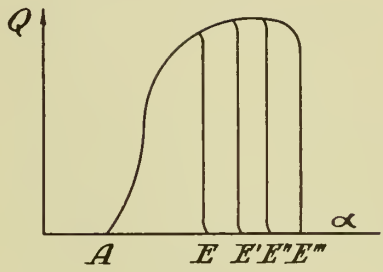

Fig. 7.

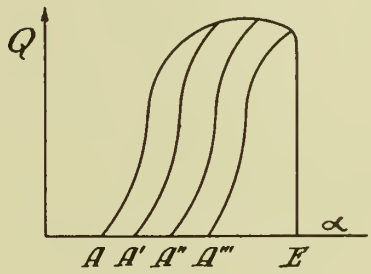

Fig. 8.

INVENTOR
OSKAR POSCH
BY A. A. Wicke
Morrell Cronin Jr.
ATTORNEYS

Published May 11, 1943

Serial No. 288,979

ALIEN PROPERTY CUSTODIAN

FUEL ADMISSION SYSTEM FOR INTERNAL COMBUSTION ENGINES

Josef Biechl, Munich, Germany; vested in the Alien Property Custodian

Application filed August 8, 1939

This invention relates to internal combustion engines of the fuel injection type, especially those designed for aircraft, in which the air is precompressed by using a blower. In these engines it is usual when providing automatic regulation to control the fuel quantity to be delivered for each working stroke in dependence on the specific weight of the air in the intake pipe. This is done mostly in such a manner that the control piston for example of a servomoter operating under oil pressure is displaced through the action of a measuring gauge being exposed to the influence of the air condition in the charging pipe of the engine, thus releasing the pressure fluid to take the corresponding ways to the working cylinder. The delivery quantity of the injection pump is then controlled by the working piston which causes the piston valve being returned to neutral position by means of a simultaneously moved cam with the help of a resetting lever.

With this method the fuel distribution will be correct as to the quantity, the temperature in charging pipe however, which is responsible for the thermal load of the engine, is not considered as for instance with an increasing temperature of the outer air the charging pressure regulator will maintain constant the specific weight of air by increasing the charging pressure in the charging pipe of the engine. The injection pump regulating device for this reason will not influence the fuel distribution each revolution, though in this case an enrichment of the mixture is necessary to prevent a thermal overstraining with maximum output yield.

To remove this drawback the invention provides an additional influencing on the injection pump regulating device which is responsive to the specific weight of the air in the charging pipe of the engine, by a regulating value resulting from the temperature prevailing in advance of and beyond the charging blower. To meet this object there is arranged in the air intake pipe and in the charging pipe a thermostat of known construction consisting of a cylinder to one end of which a corrugated tube is fixed. This tube is closed at its end face by a piston the rod of which projects from the cylinder and is subject to longitudinal movements in accordance with changes of temperature. The two thermostats are connected by rods in such a way that the reaction of the thermostat in the air intake pipe controls the initial adjustment of the thermostat in the charging pipe and then starting from the varied initial adjustment also the thermostat in the charging pipe will be able to respond. The composed movement is used to correct the adjustment of the quantity of fuel delivered by the fuel pump which adjustment is effected by the barometric capsule by means of a further linkage.

Supposing an increase in temperature will occur in the charging pipe before reaching the rated height owing to an increased engine speed when the charging pressure remains constant this means in the case of regulating devices known hitherto which respond only to the specific weight of the air, that no variation in the fuel supply takes place as the specific weight of the air—to which the injection pump governor is responsive—is maintained constant by the charging pressure regulator. The real state of things is that the increase in temperature associated therewith causes increased thermal load on the engine which is taken into account by this invention as the fuel supply is influenced by the thermostat in the charging pipe thus being determined an enrichment of the fuel air mixture which consequently will ensue an internal cooling of the engine.

If there occurs for instance a departure from the normal ratio between the charging pressure and the temperature in the charging pipe this means that without the consideration of the temperature in the air intake and the charging pipe according to the invention, which represents a regulation in accordance with the temperature determining the thermal load on the engine, the fuel quantity delivered would be likewise unsufficient. An overloading of the engine however will be efficiently eliminated by the consideration of the temperature as regulating value according to the invention, thus maintaining notwithstanding an optimum output in every case.

The device according to the invention for utilizing the temperatures in the air intake and the charging pipe as regulating value consists as shown in the accompanying drawing of a thermostat 1 in the air intake pipe 3 and of a thermostat 2 in the charging pipe 4 which for instance are connected in such a way that the initial adjustment of the thermostat 2 is varied by the rods 5 owing to the reaction of the thermostat 1. From this new initial adjustment the thermostat 2 will respond separately and the resulting movement will be transmitted by the rods 6 to the regulating device.

This value is now taken into account in such a manner that the movements transmitted by the rods 6 is imparted through the bell crank lever 7 to a pivot arm 8. The pivot arm 8 serves as intermediate member between the barometric

capsule 9 responding to the air condition in the charging pipe and the resetting lever 10 which abuts with one end on the cam 12 connected for positive movement with the working piston 11 and is pivoted with its other end to the piston valve 13. The known regulating operation of the barometric capsule 9 on the piston valve 13 according to which the working piston 11 is displaced by the pressure fluid which causes the fuel supply of the injection pump to be varied by the piston rod 14 is no longer effected directly according to the invention but the pin 15 moved by the barometric capsule 9 abuts against the arm 8 and this arm on its part influences by means of its end 16 opposite its hinge point with the bell crank lever 7 the resetting lever 10.

From this arrangement and from the fact that the variations caused by the temperature in the air intake pipe and in the charging pipe are considered for there follows an additional influence on the effective lever arm of the barometric capsule 9 controlling through the pin 15 the piston valve 13 and thus by the correct metering of the fuel supply for each working stroke the disadvantageous straining of the engine referred to in the foregoing is eliminated.

In addition it may be mentioned that by an appropriate selection of the dimensions of the arms of the bell crank lever 7 which transmits the movement imparted by the rods 6 to the intermediate arm 8, it is possible to give the regulating value resulting as described above every desired possibility of action.

JOSEF BIECHL.

PUBLISHED

MAY 11, 1943.

BY A. P. C.

J. BIECHL

FUEL ADMISSION SYSTEM FOR INTERNAL COMBUSTION ENGINES

Filed Aug. 8, 1939

Serial No. 288,979

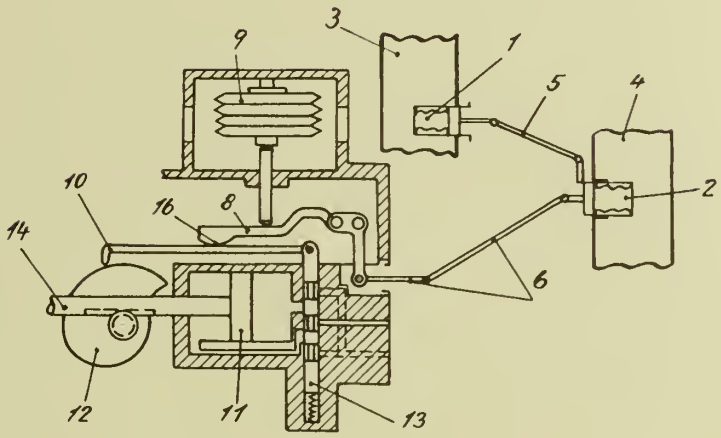

Inventor

Josef Biechl

Published May 11, 1943 Serial No. 288,980

ALIEN PROPERTY CUSTODIAN

FUEL METERING DEVICES FOR INTERNAL COMBUSTION ENGINES

Josef Biechl, Munich, Germany; vested in the Alien Property Custodian

Application filed August 8, 1939

This invention relates to a method for determining the output of aircraft engines during flight. Hitherto this has been effected by using devices designed to take up the reaction of the torque delivered by the engine by means of a piston subjected to oil pressure which then can be measured with instruments exposed to this oil pressure. Thus the output can be ascertained with the help of the speed of the engine prevailing at every time.

This invention now proposes to utilize with this method the oil pressure being in dependent relation to the general torque in order to control the fuel supply for each working stroke by influencing through an appropriate regulating device the delivery quantity of the injection pump, in which case in the known manner the engine speed prevailing at every time will determine the quantity of fuel delivered in consequence of the driving connection between engine and injection pump. A further form of construction of the invention provides for the regulation the utilization of the influence of the condition of the precompressed air delivered from a blower. The regulation according to the invention will be effected in such a way that firstly, as usual, corresponding to the air passage through the engine, which depends upon the engine speed, the fuel will be delivered by the pump automatically in accordance with this engine speed. If for instance the output varies for the same engine speed, the variation of the torque thus involved will cause a different pressure in the pressure gauge system. Considering that the pressure according to the invention thus obtained influences through a piston the delivery quantity of the injection pump, the fuel supply is in direct proportion to the torque delivered by the engine. This arrangement will eliminate in contrast to all others hitherto known every possibility of errors, as the regulation is effected directly in dependence on the value which alone is determining the load to which the engine is subjected that is to say the effectively delivered torque.

As this method of regulation involves the possibility that the variation of the fuel supply is effected with a certain delay, the invention as a modification an additional adjustment consisting in that the pressure prevailing in the charging pipe actuates by means of a control device the adjusting piston which latter is directly influenced in dependence of the torque. The regulation process regarded as a whole will take place in such a way that for instance when adjusting the output throttle in order to obtain a high output this will immediately be followed by an increase of pressure in the charging pipe which, according to the invention, is utilized to influence with the assistance of a servomotor the same piston which is directly impinged by the oil pressure in dependence of the torque and actuates the adjustment rod of the injection pump. Thus the engine delivers a torque which is increased in accordance with the variation of the throttle valve position, which in turn brings about a variation in the pressure gauge system, effecting its influence directly on the adjusting piston, which controls the fuel delivery exactly according to the delivered torque. From the fact that the pressure of the measuring system without the intermittence of any control devices acts unrestrainedly upon the adjusting piston, which as counterforce is placed under spring pressure all influences that possibly could lead to errors in regulation will be eliminated from the beginning.

It must further be pointed out as a matter of importance in the regulating process according to the invention that the direct influence exerted on the adjusting piston in dependence on the delivered torque also correctly considers the air passage through the engine which increases inversely proportional with the exhaust back pressure and directly proportional with the height of flight and the increased fuel supply implied therewith, since the output and the torque serving as regulating value correspondingly increases. For this reason there is no necessity to arrange the additional devices as usual hitherto which in dependence upon the condition of the outer air took account of this circumstance. This simplified arrangement involves a further advantage that the invention secures an exact regulating effect as could not be obtained hitherto in regulating according to the condition of the outer air.

As already mentioned in the premise the realization according to the invention depends upon the measuring of the torque delivered by the engine with the assistance of an appropriate device. The invention provides for this purpose a pressure gauge system the construction and cooperation of which with regulating device according to the invention will be described in the following with reference to the accompanying drawing.

In the example of construction oil is used as pressure fluid, which might as well as be replaced by any other medium. Furthermore the regulation is effected under the additional influence of the charging pressure though, as mentioned in the premise, there is a possibility of regulation

only in direct dependence on the pressure being in dependent relation to the torque, taking into the bargain a certain lag.

The pressure gauge system for taking up and measuring the torque delivered by the engine consists in a known manner of two pistons 1 and 2 which take up the torque transmitted through lever arms, the back pressure will be taken up by the pressure fluid acting upon the pistons. This causes beyond the piston an oil pressure which is in dependent relation to the torque of the engine. Both the cylinder spaces 5 and 6 taking up the back pressure are connected with each other by a pipe conduit 7 in which the measuring instrument 8 for the torque is inserted and which is besides in communication with the cylinder 9 containing the adjusting piston.

The adjusting piston 3 actuates with its connecting rod 10 the rod 12 adjusting the delivery quantity of the fuel injection pump 11 and responses directly to the torque, which is in dependent relation to the oil pressure admitted through the conduit 7. The counterpressure working on the piston 3 is represented by the spring 13. In order to efficiently prevent the possibility of an undesired lag in regulation the air condition prevailing beyond the blower may be considered for this purpose. The charging pressure likewise influences the adjusting piston 3 through the medium of a servomotor.

For carrying out the servomotor effect in dependence upon the charging pressure implies the existence of a medium of constant pressure, for instance oil in contrast to the pressure in the conduit 7 varying dependently on the torque delivered at every time. To obtain this constant pressure the invention provides a pump 14 which delivers into an equalizing tank from which on the one hand through conduits 17 the pressure oil is led into the cylinder spaces 5 and 6 in which the pressure is adjustable in correspondence with the torque by controlling the inlet and outlet bores by control pistons 17 and 18 operatively connected to the pistons 1 and 2. On the other hand a constant pressure is obtained through the conduit 19 in the piston valve 20. The pressure in the equalizing tank 15 is given such a value by a relief valve 27 that it is above the maximum pressure prevailing in the spaces of the measuring cylinder.

The control pistons 17 and 18 connected with the pistons 1 and 2 taking up the torque work in such a manner that for instance an increase of torque will cause the pressure pistons 1 and 2 to be displaced outwardly. Thus the inner edges of the control pistons 17 and 18 will release the inlet openings from the pressure conduit 16 as long as the pressure is again equalized. The pressure prevailing in the spaces 5 and 6 and consequently in the conduit 7 is higher than before. Furthermore the cylinder spaces 5 and 6 are connected through bores 21 and 22 with the spaces 23 and 24 beyond the control piston 17 and 18 so that the same pressure is prevailing in the spaces 5 and 23 resp. 6 and 24. If for instance the torque diminishes the pistons 1 and 2 are moved inwardly and at the same time the outlet bores 25 and 26 are released from the outer edges of the control pistons 17 and 18 as long as again the same pressure—in this case lower than before—is obtained in the spaces 5 and 23 resp. 6 and 24 to compensate the pressure exerted from the torque.

The charging pressure influencing indirectly the regulating effect actuates through a conduit 28 upon a barometric capsule 29 which in its initial position can be displaced by means of a balance arm 30 to the other end of which the connecting rod 10 of the adjusting piston 3 is pivoted. The piston valve 20 is moved by the barometric capsule 29 in such a manner that with a diminishing charging pressure—corresponding to an expansion of the capsule—the piston valve is moved outwardly which permits the oil to leave the space 32 through the connection pipe 31 between the piston valve 20 and the cylinder space 32 in front of the adjusting piston and through the discharging pipe 33. With increasing charging pressure the piston valve 20 is moved inwardly thus providing a connection between the constant pressure pipe 19 and the conduit 31 leading to the regulating pressure space 32.

The invention will operate as follows: If for instance in consequence of an adjustment for higher output the charging pressure increases thus causing the piston valve 20 to permit the constant pressure contained in the conduit 19 to influence through the conduit 31 the adjusting piston 3 as long as the latter has been displaced under the pressure of the spring 13 so far that the balance arm 30 in consequence of the variation of the initial adjustment of the barometric capsule 29 will bring the piston valve 20 again into its neutral position. The displacement of the adjusting piston 3 against the spring pressure effects by the rod 12 an increased delivery of the injection pump 11. This will have as a further consequence the desired increased torque and an increasing pressure in conduit 7 so that the position of the adjusting piston 3 preliminarily adjusted by the variation of the charging pressure corrects exactly corresponding to the effective torque delivered by the engine that is to say the fuel supply to the engine is in correct relation to the real requirements. In other words the fuel supply which is primarily regulated indirectly according to the charging pressure will be adjusted directly according to the only competent value for the correct metering which means a regulation free of errors. This regulation is rendered possible by the fact as, according to the invention, the adjusting piston 3 is influenced as well by the charging pressure as by the torque.

A diminishing output will ensue a decrease of the charging pressure thus causing the piston valve 20 to release the way out from the intermediate pipe 31 into the discharging pipe. This will have the consequence that the adjusting piston 3 will be displaced under the pressure of the spring 13 to produce a diminished fuel supply. The movement of the adjusting piston 3 continues as long as after taking into consideration the piston of the balance arm 30 the initial position of the barometric capsule 29 corresponds to the neutral position of the piston valve 20. The diminished pressure in the conduit 7 caused by the decrease in torque acts directly upon the adjusting piston 3 which controls the preliminary adjustment exactly corresponding to the real fuel requirements for the torque effectively delivered by the engine.

In order to make the relation of the movements of the piston rod 10 and the rod 12 capable of being influenced, the invention provides between the connecting rod 10 of the adjusting piston 3 and the rod 12 adjusting the delivery quantity 11 a toggle lever 35 guided in a link 34.

A nozzle 36 is provided in the connection pipe

31 between the piston valve 20 and the regulating pressure space 32, the dimensions of which must be so as to obtain the necessary adjustment of the regulating rods notwithstanding a departure from the usual relation between charging pressure and torque. If for instance the charging pressure decreases compared with the torque this means that the piston valve 20 releases the outlet bore for the conduit 31 so that a pressure in the space 32 corresponding the high torque can expand and possibly take this way, without moving however the adjusting piston 3 against the spring pressure as would be necessary. By the arrangement according to the invention and an appropriate choice of the nozzles 36 this possible drawback is efficiently avoided, as in the case described the expansion of the pressure corresponding the torque is retarded or partly prevented owing to the existence of the nozzle 6.

Resuming it may be pointed out once more that by proceeding according to the regulating process being the object of the invention that an adjustment of the fuel supply in accordance with the only competent value that is to say the torque delivered by the engine, is effected in a way that eliminates every sort of errors thus representing a regulation as could not be obtained with anyone of the regulating devices known hitherto if it were for fundamental reasons. A further advantage will be that the device according to the invention can operate for carrying out this process without servomotor devices owing to the direct influence exerted on the adjusting piston by the pressure corresponding the torque as the forces produced are great enough to effect all regulating operations. This involves besides exactness—since all sources of errors are eliminated—a robust construction, which is especially desired a far reaching insensibility to oscillations is obtained therewith. Precisely the high sensibility of the regulating devices known hitherto to external influences and particularly to oscillations so that the invention represents a remarkable progress also in this respect. In conclusion attention is called to the fact that with the regulation according to the invention the additional regulation for taking into account the decreasing pressure of the outer air with increasing height of flight which was indispensable up to now in every case can be suppressed. Nevertheless this value is given a more correct consideration for the fuel supply than would be possible with all regulating devices known up to now, which means a further important simplification.

JOSEF BIECHL.

PUBLISHED

MAY 11, 1943.

BY A. P. C.

J. BIECHL

FUEL METERING DEVICES FOR INTERNAL COMBUSTION ENGINES

Filed Aug. 8, 1939

Serial No. 288,980

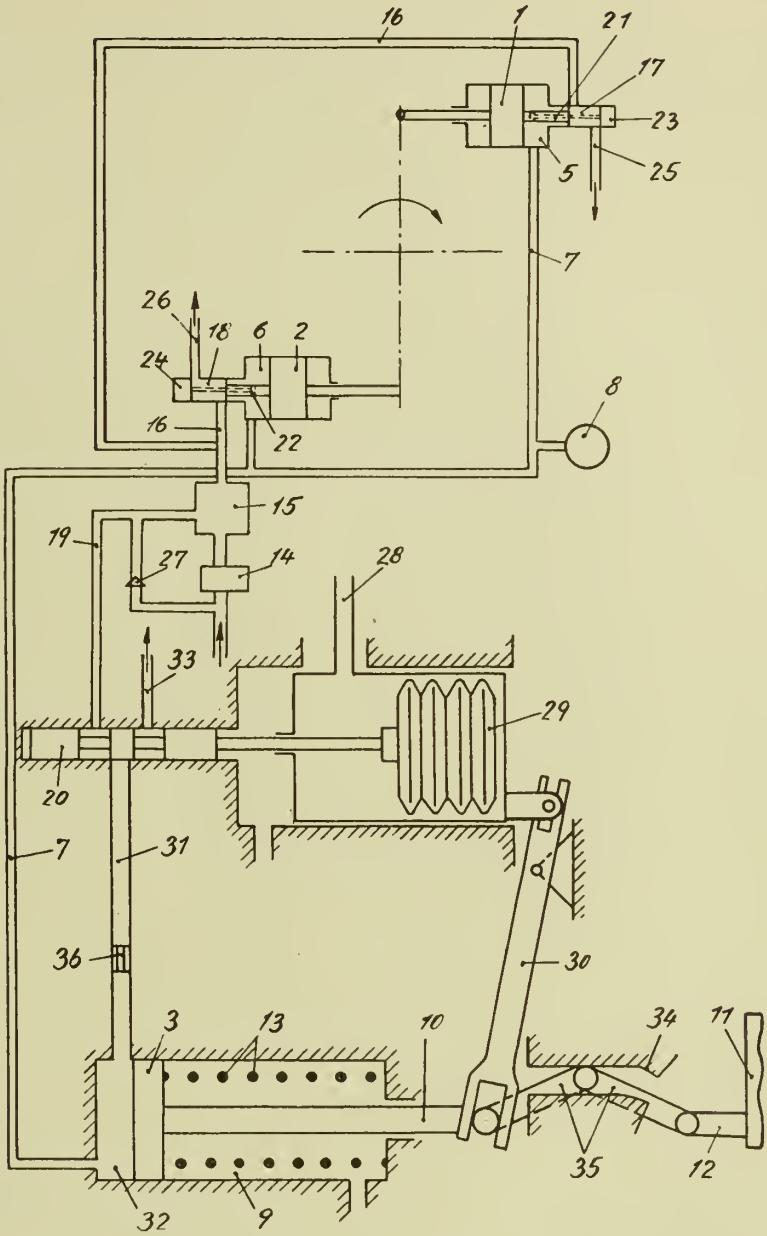

Inventor

Joh Biechl

Published May 11, 1943

Serial No. 289,432

ALIEN PROPERTY CUSTODIAN

PROCESSES FOR THE MANUFACTURE OF FIBRE BOARD

Heinz Meyer, Hamburg-Altona, Germany; vested in the Alien Property Custodian

No Drawing. Application filed August 10, 1939

This invention relates to a process for the manufacture of wood fibre boards and the object of the invention is to provide a simple and cheap process for the manufacture of hard boards, which, although readily available and inexpensive materials only are used, are of good quality and, in particular, have a good appearance.

In recent times increasing attention has been paid to the manufacture of hard wood-fibre of boards but a board which can be considered to be an equally good substitute for wooden boards has not yet been successfully produced. Further, it has not yet been possible to use wood waste for the manufacture of such boards since if such waste wood is used the surfaces of the boards do not satisfy the requirements which have to be met. It is true, however, that this disadvantage could be obviated by using artificial resin as the binding agent for the wood waste. But the use of artificial resin in the manufacture of the entire boards leads to an unnecessary and undesirable consumption of this valuable material quite apart from the fact that the boards which are made with the use of such a large quantity of artificial resin are extremely expensive and uneconomical.

It has now been found that it is possible to produce hard fibre boards of which the surfaces satisfy all the requirements which they have to meet without the necessity for using artificial resin alone as the binding material. According to the invention, wood fibre chips, wood wool or wood waste of any kind are mixed with a binding agent of any suitable kind, then pressed into the form of boards between paper webs or sheets which are coated on the outside with a binding agent, for example an artificial resin, which has been beaten into the form of foam, after which the paper webs or sheets are stripped from the boards, which may be of any desired shape and thickness.

Since in the above-described process the surfaces of the boards are formed by the artificial resin which penetrates from the outside, artificial resin need no longer be used as the binding agent for the boards themselves but ordinary vegetable albumen or the like, for example, can be used for this purpose. When the boards are made by the process of the present invention the surfaces of the boards are extremely hard since the paper webs or sheets allow the artificial resin with which they are coated to permeate through them but retain it at the surface of the boards where it forms a very hard surface.

The attempt has indeed previously been made to impregnate boards of fibre paste in such a way that the hardening agent penetrated only into the outermost layers but these attempts did not lead to the producion of a useful product because it was not possible to obtain a uniform impregnation of the surface of the boards. This was largely due to the fact that asphalt was mainly used as impregnating material. It has now been found, however, that it is possible uniformly to impregnate the surface in an extremely practical and simple manner if an intermediate carrier is used for the impregnating agent, the carrier being removed after it has fulfilled its purpose. In the process of the present invention this intermediate carrier is the paper web or sheet upon which the impregnated material is spread. When the boards are pressed the impregnating agent penetrates through the paper into the surface of the fibre board to be formed. After the board has been pressed therefore the binding agent is no longer present in the paper web or sheet but permeates the surface of the wood fibre board. Consequently the intermediate sheet or web can be removed, for example it may be simply stripped or ground off.

With the process of the present invention, therefore, an inexpensive binding agent is used and a kind of film is formed on the surface of the board produced, which film, owing to the use of a suitable impregnating agent, produces a hard surface on the board. The paper is so thin that it carries only a thin skin of the external binding agent which, after the pressing process, is transferred to the board owing to the effect of the heating.

The use of a paper web or sheet as the carrier of an impregnating agent is known per se but with the fundamental difference that the paper web or sheet remained, after the board was fomed as an inseparable constituent of the final product and did not give up the impregnating agent to the board itself. The paper therefore formed part of the final product while when the process of the present invention is employed the paper is applied only temporarily.

The application of the binding agent to the paper web or sheet can be effected by spraying, for example by means of a paint sprayer or the like. Instead of spraying the binding medium, it is also possible, however, to apply the binding medium by pressure during the pressing process for which purpose calenders of known kind can be used.

Ordinary paper can normally be used as the

paper web or sheet because it is only temporarily applied and is removed later.

The finished boards have all the properties of ordinary wooden boards, such as ply boards; they can be sawn, milled, tongued and grooved in exactly the same way as wooden boards, screws can be screwed into them and nails can be driven in. The surfaces are so smooth on both sides that the boards can be used for the same purposes as planed boards or veneered sheets.

HEINZ MEYER.

Published May 11, 1943

Serial No. 290,146

ALIEN PROPERTY CUSTODIAN

WOOD CUTTING MACHINES

Robert Alexander Nielsen, Copenhagen, Denmark; vested in the Alien Property Custodian

Application filed August 15, 1939

The present invention relates to an improved wood cutting machine for producing any desired profile on poles and similar work pieces by means of stationary cutter members arranged conaxially in relation to each other, and towards which the work piece is conveyed by means of feeding rollers.

In the hitherto known wood cutting machines of this kind it has been difficult to obtain a perfectly smooth surface on the completed work piece. The reasons of this are various. Thus variations in the surface of the work piece to be cut causes one or several of the feeding rollers to slip its hold, and the feeding process becomes irregular, which gives occasion to irregularities in the cutting. Furthermore the cutting edge of the cutter during operation is subjected to vibrations causing slight indentations in the finished surface of the work piece, and finally the cutting often causes the work piece to split along the grain, thereby injuring or in some cases entirely destroying the work piece.

The object of the present invention is to provide a wood cutting machine of the kind in question in which the above inconveniences are entirely obviated, and according to the invention this is obtained by employing two rows of horizontally disposed rollers mounted on oscillating arms attached to the machine, and which rollers are operated to rotation by means of a chain drive in such a manner that the work piece inserted between the two rows of feeding rollers is fed steadily to the cutters, which are provided with means that partly prevent the cutter edge of the cutter members in vibrating during operation, and partly serve to break the shavings immediately when formed by the cutter, thereby preventing the splitting of the work piece.

For operating the feeding rollers by means of a chain drive each roller is provided with a sprocket, and an endless chain is carried over the sprockets, so that none of the rollers can slip during the operation, and thus cause irregular feeding of the work piece, and any resistance arising will cause an increase of pressure upon the work piece of the feed rollers, and a steady feed is ensured.

One manner of constructing the wood cutting machine according to the invention is illustrated in the accompanying drawing, in which

Fig. 1 is a side elevation, and

Fig. 2 a top elevation of a wood cutting machine according to the invention,

Fig. 3 is a cutter holder on an enlarged scale in side elevation,

Fig. 4 same in top elevation and partly in section, and

Figs. 5–7 various profiles of work pieces formed by means of a cutting machine according to the invention.

Referring to Figs. 1 and 2 the machine frame is indicated by 1, and on the upper surface hereof there is attached a horizontal beam 2 made of for instance an iron bar of I-profile. This beam carries a number of feeding rollers 3 by means of which a work piece 4 is conveyed towards a number of coaxially disposed cutters 5, each of which is fixed within a holder 6. The feeding rollers 3 are arranged in two rows parallel to the axis of the work piece, one row on each side of the beam. Each feeding roller 3 is rotatably mounted on a vertical post 7 rigidly attached to the one end of an arm 8, which with its other end is arranged to oscillate on a stud 9 fixed to the beam 2. Each roller in one row is disposed just opposite a roller in the other row, and due to the oscillating arms 8 the rollers of each row may swing to and from the rollers in the opposite row.

To the upper side of each feeding roller there is attached a sprocket 10, and over all the sprockets an endless chain 11 is carried, the chain continuing over an idler 12, that is mounted on an arm 13 rotatably attached to the beam 2, and from there to a drive sprocket 14 mounted on a stationary arm 15 likewise attached to the beam 2. The idler arm 13 is actuated upon by a spring 16 inserted between the arm and the beam and serves to hold the idler in position to tighten the chain. The shaft 17 of the drive sprocket 14 is connected to a source of power not shown. An actuation of the driving sprocket 15 will tension the chain, causing the feed rollers 3 to be pressed against the work piece 4, to the effect that during the continued rotation of the rollers the work piece 4 is moved towards the cutters. The harder the actuation on the driving sprocket is, the more firmly will the feed rollers press against the work piece.

Each cutter 5 comprises a cylindrical body inserted in the centre of the holder 6, which consists of a bar provided with an aperture 18 in each end. The ends of the bar are provided with slits through the ends of which there are borings for clamping bolts 19. The holders are clamped to carrier arms 20 that traverse the apertures 18 and are fixed in any appropriate manner to the beam 2, the holders being arranged one behind the other with the centre of the cutters in alignment with the longitudinal

axis of the work piece. Guiding plates **21** through an aperture in which the work piece travels, are attached to the carrier bars in front and behind the cutters **5**. The cutters **5** may either be formed in a single piece, or they may comprise a number of segments.

The cutter edge is formed by means of a bevelled portion **22** on the outer side of the cutter member. The holder **6** is provided with an aperture **23** in which the cutter **5** or the cutter segments are disposed and fixed in position by means of screws **24**. The edge of this aperture **23** has on the front side of the holder an inwardly extending bevelled projection **25** that partly overlaps the bevelled edge **22** of the cutter, to the effect of supporting the cutter edge in order to prevent vibrations arising therein during operation. This projection **25** serves furthermore to break the shaving immediately after being produced by the cutter, thus preventing the possible splitting of the work piece during the continued treatment.

The machine described above is employed in the production of poles with circular section as shown in Figs. 5 and 6, as well as other sections of which there is shown one in Fig. 7 by way of example. It will be understood that for cutting such profiles the cutter **5** has a centre opening of a corresponding shape. It is possible by means of slight alteration in the shape of the holder **6** and in the cutters **5** to treat work pieces of flat form along the edges of which it is desired to cut projecting edges or grooves.

ROBERT ALEXANDER NIELSEN.

PUBLISHED
MAY 11, 1943.
BY A. P. C.

R. A. NIELSEN
WOOD CUTTING MACHINES
Filed Aug. 15, 1939

Serial No.
290,146
2 Sheets-Sheet 1

FIG. 1.

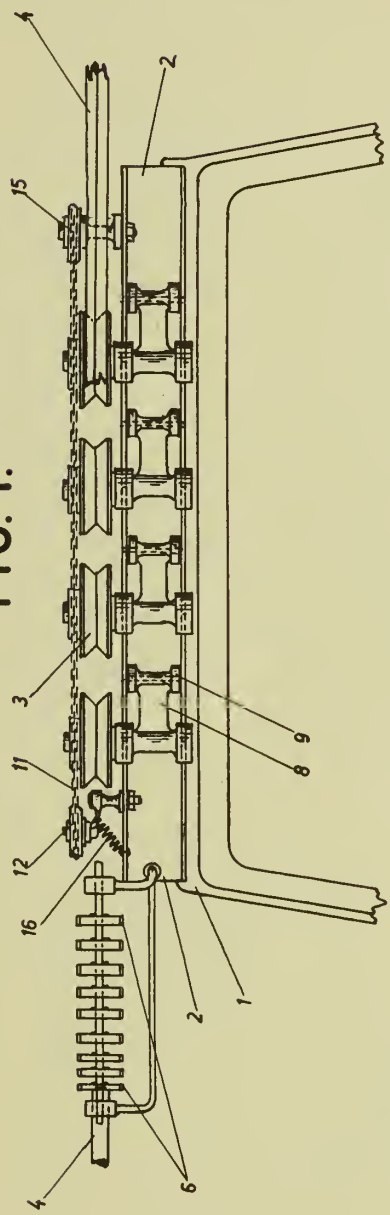

FIG. 2.

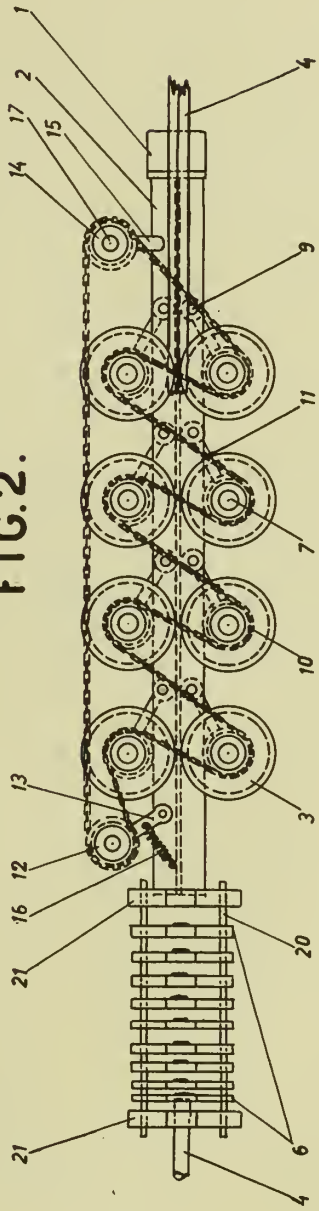

INVENTOR:
Robert Alexander Nielsen

PUBLISHED
MAY 11, 1943.
BY A. P. C.

R. A. NIELSEN
WOOD CUTTING MACHINES
Filed Aug. 15, 1939

Serial No.
290,146
2 Sheets-Sheet 2

FIG. 3.

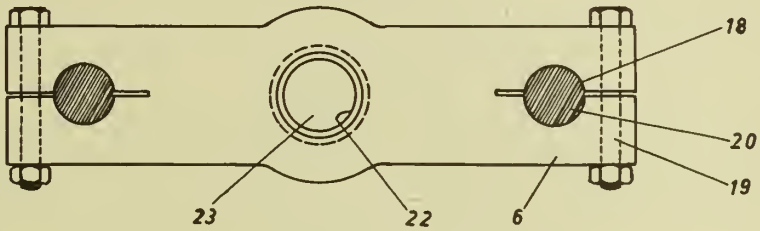

FIG. 4.

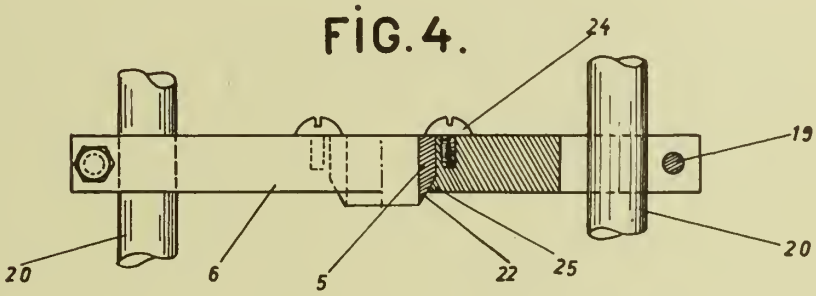

FIG. 5

FIG. 6.

FIG. 7.

INVENTOR:
Robert Alexander Nielsen

Published May 11, 1943

Serial No. 290,983

ALIEN PROPERTY CUSTODIAN

HANDBAG

Viktor Ehrenhaft, Brunn, Moravia; vested in the Alien Property Custodian

Application filed August 19, 1939

The object of the invention is a lady's handbag, in which the casing and lining are fixedly interconnected, and which is formed in a manner that replaceable outer bags of various shapes and types allowing of being separated from the said casing and lining, can be attached thereto.

Thereby it is attained that the same casing and lining may be used by the owner of the bag to form as desired different bags of various shapes and sizes and made from different material. In the said manner, it is rendered possible to transform a small fancy bag into a substantially bigger bag or a bag allowing wear and tear, the said bag being in the first case of silk or the like and in the second case of strong leather or, the said fancy bag may be made of some fancy leather of a colour to match the colour of the dress of the wearer.

In the drawing, a type of such bag is shown by way of example. **1** indicates the casing, to which the lining **2** is fixed. The outer bag **3** enclosing the lining is fastened to the said lining or casing by means of press buttons **4** applied so as to be invisible from outside. If a small outer bag is used, the lining will be arranged in folds, while, if a bigger outer bag be employed, it will lie extended in full size. Instead of press fasteners, any other convenient fastening means may be used, such as a clamping device, zip-fastening or the like. The casing may be made extensible, that is, so as to allow its length to be varied. A bag according to the invention also presents the advantage that in spite of the outward variation of the bag as to shape, size and colour, its interior arrangement will remain the same in respect of shape, colour and material, so that the wearer of the bag will not have to empty and refill it. In case the outer bag became unsightly due to wear, while the casing and lining were in good condition, it will be possible by bying an appropriate outer bag to economically obtain a substitute.

VIKTOR EHRENHAFT.

PUBLISHED
MAY 11, 1943.
BY A. P. C.

V. EHRENHAFT
HANDBAG
Filed Aug. 19, 1939

Serial No.
290,983

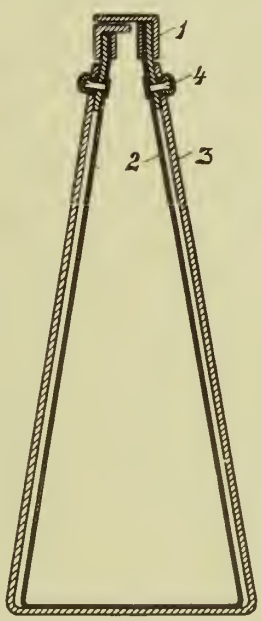

Inventor.
Victor Ehrenhaft
By C. A. Orr.

Published May 11, 1943

Serial No. 291,280

ALIEN PROPERTY CUSTODIAN

MATERIALS RESISTANT TO POISONOUS GASES

Raoul Wechsberg, deceased, late of Amsterdam, Holland, by J. C. A. Büchner, administrator, Amsterdam, Holland; vested in the Alien Property Custodian

No Drawing. Application filed August 21, 1939

This invention relates to materials resistant to poisonous gases such as war gases and more particularly to mustard gas (dichlorodiethylsulfide).

The invention comprises methods of producing such resistive materials and of making materials resistant to such gases.

It is an object of the invention to provide materials for clothes and similar purposes which comprise a protective substance which renders this material resistive to war gases.

It is another object of the invention to make walls for protecting rooms or other protective means resistive to war gases.

Other objects of the invention will appear as the specification proceeds.

According to the invention materials designed for protecting purposes are tightened or sealed by means of an elastic artificial substance which may contain filling materials and other additions. One or several layers of these substances are applied to this end on a suitable support. A great number of substances, with which one or either side of a support should be coated, have already been proposed for the production of materials capable of protecting from poisonous gases. For the manufacture of clothes resistive to such gases only substances can be used which possess a satisfactory suppleness and elasticity, while the material must not be too heavy and, as a rule, should not exceed 700 gs. per square meter. An elastic material which is often employed for this purpose is rubber, which, however, offers a satisfactory protecting action only during short time. A great number of substitutes and conversion products of rubber have also been proposed for this purpose, but really satisfactory results have not been attained as yet.

It has now been found that a very effective protection against poisonous gases can be obtained by applying to a support a mixture of an elastic artificial substance, which is practically resistant to filling materials which oxidise mustard gas or decompose or convert it in another manner, and of such a filling material capable of converting mustard gas. Peroxides such as lead dioxide (PbO_2) or other oxidising compounds may be used as such filling materials.

Besides these filling materials, which cause a conversion of mustard gas, other filling materials may also be added, for instance talcum or kieselguhr or other substances capable of influencing the properties of the material such as plastifiers, drying oils, resins, artificial resins, asphalt, resin soaps, glycerol and the like.

As elastic artificial substance resistant to the action of filling materials which attack mustard gas, such as peroxides, various polymerisation products resembling rubber may be employed. As examples may be mentioned polyisobutylene nitriles, polyethylene chlorides and the like. Polymerisation products of isobutylene, for instance the product known under the trade mark "Oppanol" of the I. G. Farbenindustrie A.-G., and of related hydrocarbons, such as polyalkenes or polytenes, have been found to be particularly suitable.

The combination of for instance polyisobutylene with lead dioxide appeared to give extraordinarily favorable results as protecting agent against poisonous gases and a very extended protecting duration.

The mixture of the elastic artificial substance and the filling material capable of converting mustard gas, for instance a mixture of polyisobutylene with lead dioxide, is particularly suitable for the manufacture of gas-proof clothes. To this end a layer of the mixture is applied to a support, for instance a textile material. Even a thin coat secures a satisfactory protection from poisonous gases, more particularly from mustard gas, during many hours. The protecting duration increases with the thickness of the coat.

Between the support and the protecting layer and, if desired, as a covering layer upon the protecting layer there may be arranged one or several layers of a different material. The rear side of the support, for instance the textile fabric, to which the protecting mixture is applied, and, if desired, the rear side of the textile fabric or other material with which the protecting layer is covered, may also be provided, for instance coated, with an elastic material, such as rubber, or an elastic color or varnish layer.

The protecting layer may be arranged on different supports. Apart from textile materials supports of rubber, leather, paper, reinforced paper and the like may be used. The materials for adjoining layers must be chosen so that they do not influence each other in an obnoxious manner. If the mixture according to the invention and another elastic substance, such as rubber or products of condensation or polymerization of organic compounds, are employed in adjoining layers, it may be useful to arrange an intermediate layer which consists of a mixture of the materials of these two layers.

The product according to the invention is not only suitable for the production of a material having the form of sheets or breadths, as is the

case with tissues, but it can advantageously also be applied to other purposes, for instance to the production of rooms which afford protection from poisonous gases by tightening the gas-pervious parts of the walls of such rooms with the material according to the invention.

The material may preferably be applied in the form of a dispersion in a liquid, e. g. benzine. The liquid is vaporized after a layer of such a dispersion has been deposited. The mixture may in dependency on its consistency be applied or deposited in any way which is usual for the appliance of such layers; it may for instance be applied by spreading, ironing, calendering, rubbing in and the like. These operations may be carried out once or several times.

Example

For gasproofing the following mixture gave good results:

	kgs.
Polyisobutylene (Oppanol)	7500
PbO_2	1500
Magnesium oxide (magnesia usta)	1500
Kieselguhr	3750

The procedure is as follows:

Start polyisobutylene on a warm mill, approximately 50° C, and mill at friction speed, approximately six minutes, adding kieselguhr. Mill until the material is smooth on rollers, add magnesium oxide and as last ingredient add lead dioxide. Sheet out in thin sheets and soak in benzene during one night. Run in hoppers the next day, adding benzene, until a smooth satisfactory cement is obtained. This cement is spread on a fabric of suitable strength in very thin layers, taking care that the machine is hot enough to evaporate the benzene.

Care should be taken to run thin layers, deposit approximately 10 grams per square meter, since polyisobutylene retains liquid and is slow-drying.

After running until enough weight is obtained, dust with French chalk and spread a number of coats on the reverse side.

This side afterwards dust with French chalk.

Materials which are coated with the product according to the invention or the gasproof clothing made in accordance with the invention may, if spoiled with a poisonous gas, satisfactorily be cleaned by boiling without their long protecting duration being affected.

Various changes may be made in the details disclosed in the foregoing specification without departing from the invention or sacrificing the advantages thereof.

J. C. A. BÜCHNER.

Published May 11, 1943

Serial No. 292,505

ALIEN PROPERTY CUSTODIAN

PROCESS FOR THE IMPREGNATION OF ALL KINDS OF WOODS

Karl Wolman, Berlin-Grunewald, Germany; vested in the Alien Property Custodian

No Drawing. Application filed August 29, 1939

It is known that the intermediate fractions of tar distillates are used for the purpose of preserving wood. The impregnation oil must be of such a nature that, even after the impregnated wood has been in use for years, there is still a sufficiently large portion of the oil originally introduced into the wood, to exclude the agents which destroy the wood. The heavy pit coal tar generally used to-day for the preservation of wood is one of such tar distillates. In addition to pit coal tar, other tars with different composition and properties which are produced by the dry distillation of certain organic substances, such as lignite, wood, peat and bituminous shale are used for the purpose of wood impregnation. By the repeated distillation of these raw tars or by chemical treatment, tar distillates are obtained therefrom of which, however, only the intermediate fractions are used as impregnating oils.

The regulations which the large consumers of impregnating oils, namely the railway and postal administrations of the different countries, have drawn up regarding the properties of these oils, are of particular importance.

It is also known that, owing to the lack of tar oil and other suitable oeleaginous impregnating substances which are not available in sufficient quantities in many countries, it has been endeavoured to use mineral oil in the art of the preservation of wood. For this purpose mineral oil or heavy volatile mineral oil distillates are mixed with antiseptic-acting substances, chiefly with pit coal tar or pit coal tar oil or with both pit coal tar and pit coal tar oil. It has also been proposed to incorporate antiseptic-acting organic or inorganic compounds in the mineral oil or its distillates.

It has now been found that, for the impregnation of woods of all kinds, tar distillation residues of any origin can also be used, especially in combination with water-soluble impregnating substances which are difficult to lixiviate. Those residues come into question as tar distillation residues which are obtained when raw tars are distilled from pit coal, lignite, wood, peat or bituminous shales at 250° C. Mineral oil products also come into question.

It has been found that the tar distillation residues which are viscous in cold state represent, at a suitably increased temperature, a relatively thin liquid impregnating oil which penetrates well into the wood under pressure.

These tar distillate residues have only a slight fungicidal effect. Consequently an agent having a strong fungicidal effect is used in addition to this inferior oil for protecting the wood against the attack of fungus.

According to the invention the wood is provided with an oil-containing water-repellent coating a few centimetres in thickness, whereas the highly poisonous substance, for example thanalith U, deposits both in the interior of the wood and also in the oil-containing coating zone.

The process can be carried out in various ways:

(1) Impregnation of the wood with salt solution; removal of the wood from the steeping vessel and allowing to dry. Again running the wood into the stepping vessel which is then charged with oil, after which the oil impregnation takes place.

(2) Running the wood into the steeping vessel; impregnating with the suitable pre-heated oil according to the known process. Subsequent evacuation to remove as far as possible all excess oil from the wood and then pressing the aqueous salt solution therein.

(3) Pressing in the aqueous salt solution immediately followed by oil impregnation.

In carrying out experiments it has been found that, to introduce only a small quantity of oil per cubic metre for the purpose of forming the oil coating zone, a relatively high air pressure must be exerted on the wood at the beginning before it is possible to commence the subsequent pressing of the oil.

Experiments carried out for example with beech sleepers, showed an absorption per cubic metre of 50 kilogrammes of oil and 200 kilogrammes of thanalith U solution in the case of a total saturating period of about 4 hours.

By the above described process which consists subsequently in a double saturation with oil and Wolman salt, it is possible to use either alone or in mixtures the distillation residues of oily character and of any origin which were hitherto unsuitable for the impregnation of wood, and to render available for other purposes the valuable heavy oils hitherto used for this purpose.

KARL WOLMAN.

Published May 11, 1943

Serial No. 292,743

ALIEN PROPERTY CUSTODIAN

METHOD FOR OPERATING DUST FUELLED FURNACES

Hans Rohrbach, Bemerode near Hannover, Germany; vested in the Alien Property Custodian

Application filed August 30, 1939

In the specification of patent application Ser. No. 248 104 a method is described for operating dust fuelled engines, in which the combustion air in the combustion chamber of the engine is heated to temperatures corresponding to and even far exceeding the combustion temperature of the dust, and in which a mixture of air and dust particles having a mechanical ground size of about 4μ and less is blown in the coldest possible condition into the heated air charge. During this operation every individual dust particle is burst explosion-like into very fine particles of about $\frac{1}{50}$th–$\frac{1}{100}$thμ and smaller by the sudden heating of the air or gas particles enclosed in it or of the gas carrier, so that the whole charge can burn quickly and completely. The surprising effect of this measure is explained by the following considerations:—In each dust particle, especially in each coal dust particle, air, resin, paraffin, tar and other rapidly gasifying particles are enclosed. By the sudden heating of the cold dust particles to a very high temperature the enclosed air is precipitately brought to a high pressure and the above mentioned enclosures, such as resin and the like, are suddenly gasified in developing high pressure. In the case of dust particles ground to a fine size, for example of 35–100μ, however, no special effect takes place. But, when using dust particles with a ground size of about 4μ and less such high internal pressures are unexpectedly produced in the dust particles by the sudden heating, that these pressures burst the dust particles which split up into particles with an order of size of about $\frac{1}{50}$th to $\frac{1}{100}$thμ and smaller. The heating must take place as suddenly as possible and to the highest possible temperature; the dust grains should therefore reach the point of combustion in as cold a condition as possible.

It has now been found that the method according to the above mentioned application is also excellently suitable for operating dust fuelled furnaces, in that dust with a mechanical ground size of about 4μ and less is fed to the point of combustion in the coldest possible state. Just as in the method described in the above mentioned application an extremely favorable and rapid combustion is then attained, so that an important improvement as compared with the known methods is also attained in the case of dust fuelled furnaces. The dust burns completely and without leaving any residues.

A dust burner adapted for carrying out the method according to the invention, is illustrated diagrammatically in longitudinal section by way of example in the only figure of the accompanying drawing.

The dust burner consists for example of a conduit **1** for feeding a dust-air mixture which conduit is surrounded by a jacket **2**, a hollow space **3** being formed between them. This hollow space has a feed conduit **4** for a cooling medium, such as water, artificially brought to a low temperature, or ammonia which cooling medium can escape from the hollow space **3** through a conduit **5**. Additional air is fed through the conduit **6** and at the burner nozzle mouth **7** combines with the dust air mixture from the conduit **1** and flows with the mixture into the combustion chamber **8**, which forms for example a component of a water tube boiler **9** only partly shown on the drawing. The dust air mixture in the conduit **1** is strongly cooled on its passage to the nozzle mouth **7**, so that the temperature difference between the dust air mixture at the nozzle mouth **7** and the contents of the combustion chamber **8** is very great and the desired bursting of the individual dust particles takes place rapidly and thoroughly.

HANS ROHRBACH.

PUBLISHED

MAY 11, 1943.

BY A. P. C.

H. ROHRBACH

METHOD FOR OPERATING DUST FUELLED FURNACES

Filed Aug. 30, 1939

Serial No. 292,743

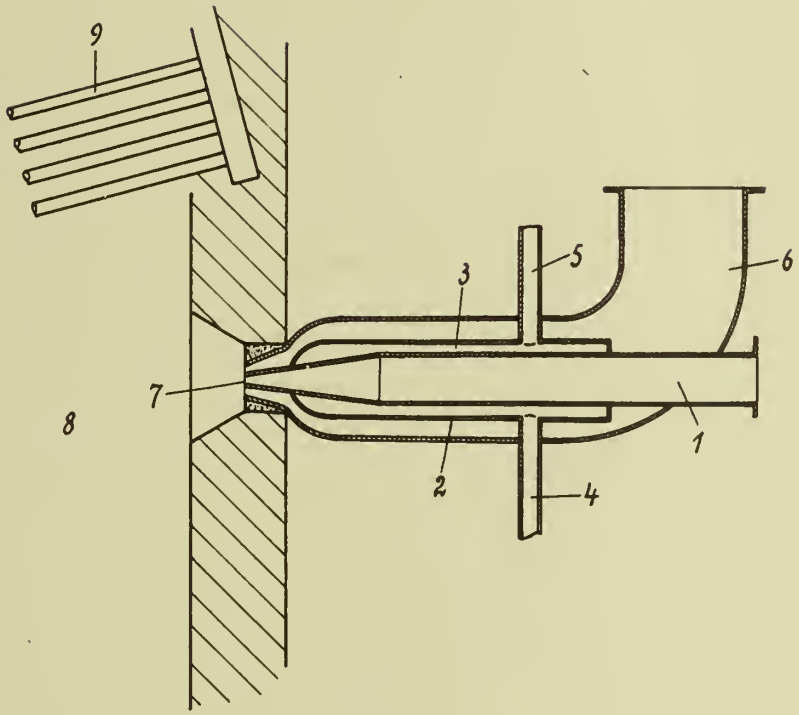

Inventor:
H. Rohrbach

By: Glascock Downing & Seebold
Attys.

Published May 11, 1943

Serial No. 293,095

ALIEN PROPERTY CUSTODIAN

PROCESSES AND DEVICES FOR THE COMPENSATION OF UNEQUAL EXPANSION OF A FLUID AND OF A VESSEL CONTAINING SAME

Henri Thaon, Saint Cloud, France; vested in the Alien Property Custodian

Application filed September 1, 1939

The present invention, relates to a device which permits of eliminating, in a hydraulic transmission, the drawback due to the difference in the expansion of the conduit itself and of the fluid contained in the same. Numerous devices have already been conceived in order to obviate this state of affairs which is most troublesome as concerns the reliability of the apparatus comprising such transmissions, at varying temperatures, and chiefly when the stresses to be transmitted take place in both directions. Use has been hitherto made of very complicated devices, such as expansion vessels, capillary tubes for braking, elastic diaphragms, etc . . .

The problem is usually posited in this manner, in the greater part of the cases of application. The piping has a coefficient of cubic expansion of $\alpha>\beta$, the coefficient of cubic expansion of the fluid contained in the same.

We will assume, that at a temperature t_0 for which the piping is filled with liquid:

V_0 is the volume of the piping.

L_0 is the volume of the liquid.

This affords:

$$V_0=L_0$$

and at a temperature of $t>t_0$, we have:

$$V<L, \text{ since } \alpha \text{ is less than } \beta$$

V and L being the respective volumes of the piping and the liquid at the temperature t.

The invention consists in introducing into the piping a body having the volume C_0 at the temperature t_0 having a coefficient of expansion γ which is so chosen as to afford the two following equations:

$$V_0=L_0+C_0$$
$$V_0(l+\alpha t)=L_0(l+\beta t)+C_0(l+\gamma t)$$

whence

$$C_0=V_0\frac{\alpha-\beta}{\gamma-\beta}$$

as α is less than β, and as C_0 must be less than V_0, it will be observed that γ must be less than α in order that the system shall operate.

The optimum conditions for this operating, i. e., the conditions in which C_0 will be a minimum, are obviously given for a negative value of γ, which is chiefly the case for rubber.

It is evident that in practice, the expansion coefficients of solids or liquids are not constant when the temperature varies, and the difference in expansion of the liquid and its container will come nearer to zero according as one has more carefully taken account of the exact law of these expansions.

This correcting device according to the invention may be realized in different ways, a certain number of which are shown in the accompanying drawing. One may, for example, as represented in Fig. 1, place in the interior of the pipe **1** a wire **2** having a diameter of D_1, and a chosen coefficient of expansion. The system is thus corrected at all points, and when the piping is lengthened or shortened, it is always corrected.

Or otherwise, one may also, as shown in Fig. 2, find by calculation or by experiment, the volume C_0 of a body **4** having an expansion coefficient γ, which is placed in the interior of a chamber **5** connected with the piping **1**. It is evident that in the calculation or the determination of the body C_0, the chamber must be considered as forming part of the conduit. Moreover, it is evident that in this case of application, instead of using a solid body **2**, it will be sufficient to use a hollow body whose external volume is C_0, such as a sphere, for instance.

Moreover, in order to take account of the fact that the piping will attain its thermal equilibrium more rapidly than the fluid which it contains, one may place upon this piping a heat-protecting covering (of rubber for example).

H. THAON.

PUBLISHED

MAY 11, 1943.

BY A. P. C.

H. THAON

PROCESSES AND DEVICES FOR THE COMPENSATION OF UNEQUAL EXPANSION OF A FLUID AND OF A VESSEL CONTAINING SAME

Filed Sept. 1, 1939

Serial No. 293,095

Fig. 1

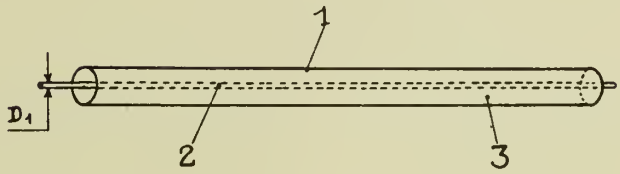

Fig. 2

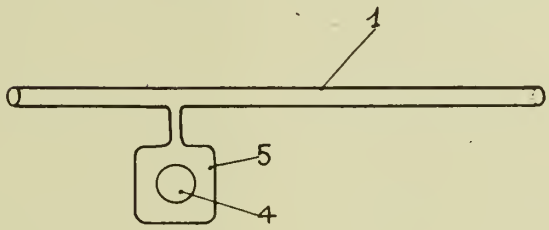

Henri Thaon

INVENTOR

BY Stellmink

HIS ATTORNEY

Published May 11, 1943

Serial No. 293,601

ALIEN PROPERTY CUSTODIAN

IMPERVIOUS PACKINGS AND RECEPTACLES

Charles Nicolle, Montrouge, France; vested in the Alien Property Custodian

Application filed September 6, 1939

The present invention relates to cellulosic or plastic matters in the form of sheets as used for making packings or wrappings, and more especially to films consisting chiefly of cellulosic esters, as commonly used for the preservation of various products, such as chemical, pharmaceutical, food or other products. These matters have the disadvantage of being insufficiently resistant to the action of moisture and, consequently, packing or wrapping elements made of these matters cannot ensure a perfect preservation of the products they contain.

It has been subjected to coat these matters with varnishes resisting to the action of water up to a given temperature, generally relatively low, but the sheets thus varnished do not permit of making packing elements by stamping or molding because, in the course of these operations, the varnish is injured either because it cracks during the stamping operation or because it peels off when ageing. Furthermore, when these varnishes are on the outside, they are never protected against the action of physical or chemical agents capable of altering and deteriorating them, and when they are located on the inside of the package they may have some action on the products enclosed therein.

The object of the present invention is to obviate the drawbacks above mentioned and to provide a matter of the type above mentioned which is wholly impervious.

According to a first feature of the present invention, this result is obtained by interposing, between two sheets of the cellulosic matter or plastic matter, a fluidtight coating, preferably made of a plastic material, for instance consisting chiefly of cellulose, or of a vinyl, acryl, or other ester, or again of various products of the type of artificial resins or varnishes containing rubber in the state of dissolution, or again a layer of paraffin or the like.

Another feature of the present invention consists in making use, as fluidtight body of a film which is fluidtight in itself and further has the quality of being elastic, for instance a film obtained from latex, and applying it on one or both of the faces of the sheet of plastic matter from which the packing is made.

Another object of the present invention consists in the production of packing elements of various shapes, such as boxes, containers, plates with recesses, bags, etc., corresponding to the shape of the products to be placed therein, made of a fluidtight composite matter incorporating a plastic material as above mentioned.

Other features of the present invention will result from the following detailed description of some specific embodiments thereof.

Preferred embodiments of the present invention will be hereinafter described, with reference to the accompanying drawings, given merely by way of example, and in which:

Fig. 1 is a diagrammatical view of an embodiment of an element rendered fluidtight according to the present invention and adapted to be used as packing or wrapping;

Fig. 2 illustrates a modification of this arrangement.

Fig. 3 shows still another modification of the product.

Fig. 4 is a sectional view of an improved packing made by means of elements constituted according to the present invention;

Fig. 5 shows a fluidtight sheet made according to a second embodiment of the invention, that is to say including a fluidtight and elastic film inserted between two sheets of plastic material;

Fig. 6 shows by way of example, a vessel or container made by means of an element constituted as shown by Fig. 5;

Fig. 7 is a diagrammatical view showing an element constituted by a single sheet of plastic material and a single fluidtight and elastic sheet applied on one of the faces thereof;

Fig. 8 is an end view of a packing made with elements of the kind shown by Fig. 7.

The simplest embodiment of the invention, illustrated by Fig. 1, consists in interposing between two sheets of cellulosic or plastic matter, 1 and 2, a fluidtight coating 3, preferably plastic, for instance consisting chiefly of cellulose or a vinyl, acryl, or other ester, or of various coatings of the type of artificial resins or varnishes of the type including chiefly rubber in the state of dissolution. I may also make use of a layer of paraffin or the like. The water-proofing lining being included between the two sheets or films is then protected against external contacts and chemical agents. It cannot be destroyel by a mechanical action, and the atmospheric agents, such as humidity, vapours or gas, cannot exert their injurious effects.

Furthermore, the varnishes are insulated from any contact with the products packed in the composite sheet, which has the supplementary advantage of avoiding any action, either of the packed products on the varnishes, or of the varnishes on the packed products.

It is also possible, by way of modification, to

make the films or sheets as illustrated by Figs. 2 and 3.

In the modification of Fig. 2, two cellulosic sheets **4** and **5** are coated with varnish on their respective faces **6** and **7**, these varnished faces being subsequently applied in contact with each other and assembled together.

According to the modification of Fig. 3, I interpose between two virging films or sheets **8** and **9** a thin film **10** varnished on both of its faces **11** and **12**, or again, between two films varnished on one face, as in Fig. 2, I interpose a virging film, the whole being fixed together, in sandwich-like manner.

The composite sheets thus obtained, as above described, are well adapted to the manufacture of packages and the like by molding or stamping, since, during these operations, which are generally carried out in the hot state, the varnish is insulated from the molds or dies that are used, so that it does not undergo any deterioration and cannot stick to the molds or dies.

In Fig. 4, I have shown a packing device including a plurality of housings, made by means of sheets according to the invention. It will be noted that both of the elements A and B are constituted each by a sheet made according to the invention, of the type illustrated by Fig. 1, that is to say including two sheets elements **1** and **2** one of which is coated with a layer of varnish interposed between them as visible at **3**.

For the manufacture of packages according to the invention, it is possible to proceed in any suitable manner. The coating may be applied by means of a brush, or by dipping the piece in the varnish, by means of a pistol, by means of coating machines of any suitable type, or, generally speaking, in any suitable manner.

The assembly of the sheets or films with the varnish interposed between them will be carried out either in the hot or in the cold state, either before the shaping of the final product (package or container) or even in the course of the stamping or molding operation.

It should also be noted that the flat films or hollow recesses made according to the present invention keep all the particular qualities of the cellulosic or plastic matters themselves, concerning printing possibilities, gluing either in the hot state or by means of a solvent, molding, stamping, folding, and so on.

According to a second embodiment of the invention, I make use, as waterproofing means, of a fluid tight film, which further possesses the property of being elastic. In particular, I will make use of films such as those obtained from latex, for instance. Such a film has the advantage, due to its elasticity, of conforming to any shape it can be given by molding or stamping and of being not liable to crack or break, as it may be the case, after a time, with a layer constituted by a layer of coating or varnish.

Fig. 5 of the drawing shows this film **15** interposed between two sheets **13** and **14** of a cellulosic or plastic matter. The film can be secured to the two sheets by means of a suitable varnish, but it can also be employed without the adjunction of a varnish.

If it is desired to make, for instance, a pot-shaped container as that shown by Fig. 6, it is not necessary to secure the intermediate film to the two sheets of cellulosic or plastic matter because the very shape of the container serves to maintain the three layers together, and the absence of air between these three layers helps in keeping them in contact. As a matter of fact, I obtain the same result as in the first embodiment, to wit an inner wall **13** and an outer wall **14**, having all the qualities and advantages of the cellulosic or plastic matters employed, and the molded walls of the container compel, due to their rigidity, the thin elastic waterproof film **3** to conform to the shape of the container.

For other packings, in particular those which are to be hermetically closed, it will suffice to cause to adhere to each other under pressure, either in the dry state or in a moist atmosphere, by means of a glue or a varnish, a single sheet of plastic or cellulosic matter **13** (Fig. 7) and a thin waterproof and elastic film **15** (Fig. 7) obtained for instance from latex. In this way, I obtain a sheet or plate having on one side the properties of a plastic or cellulosic matter and on the other side a waterproof face. This plate can easily be stamped or moulded, the cellulosic portion serving, so to speak, of reinforcement and compelling the elastic film to conform to its shape, while, of course, this film, if taken alone, due to the very fact that it is elastic, could not keep some special stamped or molded shape that it would be given. Furthermore, the cellulosic sheet gives the packages a rigidity which could not be obtained when using only a waterproof film.

Fig. 8 shows a shape, already disclosed by my prior patents, made of two sheets of a composite structure such as that shown by Fig. 7, these sheets being applied against each other. A packing thus made therefore has, on the inside, a waterproof layer which wholly and directly surrounds the product to be protected, to which moisture can no longer have any access.

CHARLES NICOLLE.

PUBLISHED
MAY 11, 1943.
BY A. P. C.

C. NICOLLE
IMPERVIOUS PACKINGS AND RECEPTACLES
Filed Sept. 6, 1939

Serial No.
293,601
2 Sheets-Sheet 1

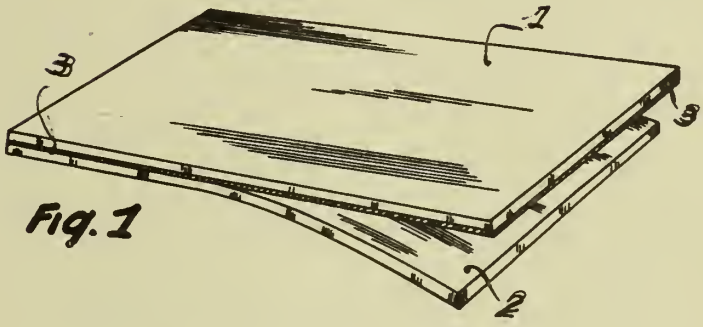

Fig. 1

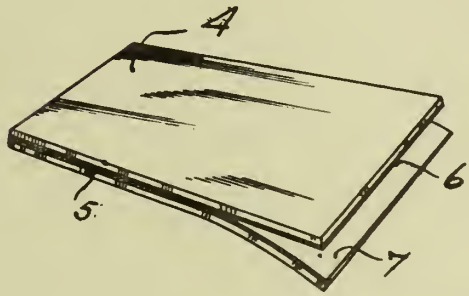

Fig. 2

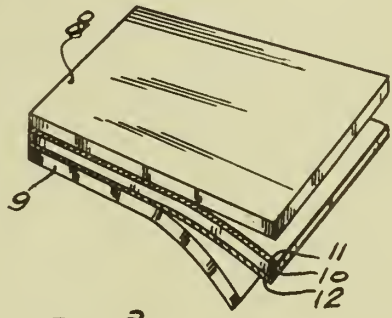

Fig. 3

Fig. 4

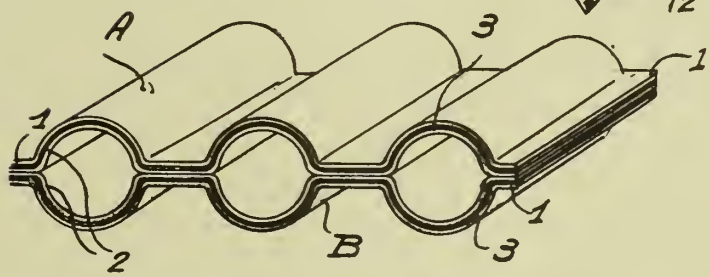

Charles Nicolle
By
Watson, Cole, Grindle & Watson
Attys.

PUBLISHED
MAY 11, 1943.
BY A. P. C.

C. NICOLLE
IMPERVIOUS PACKINGS AND RECEPTACLES
Filed Sept. 6, 1939

Serial No.
293,601
2 Sheets-Sheet 2

Fig. 5

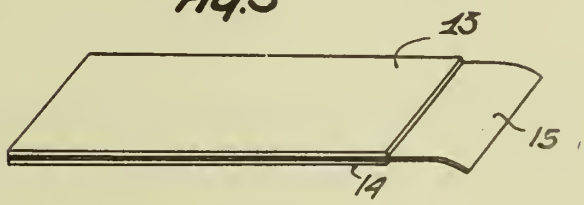

Fig. 6

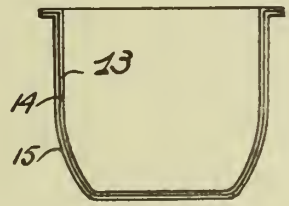

Fig. 7

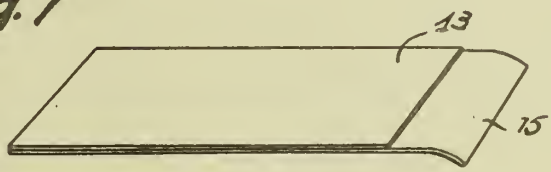

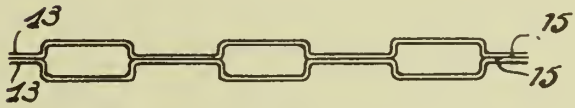

Fig. 8

Charles Nicolle
By
Watson, Cole, Grindle & Watson
Attys.

Published May 11, 1943 Serial No. 293,903

ALIEN PROPERTY CUSTODIAN

EDGE ORNAMENTATION FOR FABRICS AND IN METHODS AND MACHINES FOR PRODUCING IT

Frederick Lutz, Stuttgart/W., Wuerttemberg, Germany; vested in the Alien Property Custodian

Application filed September 8, 1939

This invention relates to edge ornamentation for fabrics, and it is also concerned with methods and machines for producing such ornamentation.

The chief aim of my invention is to make possible the production of ornamentation edging which is characterized by spaced design figures each consisting of one or more loop projections respectively composed of chain stitches whereof the first and the last stitches only pass through the fabric and penetrate it at the same point, and in which the figures are connected by stitch chains, which, except for the first and last stitches, are free of the fabric edge. This objective I attain as hereinafter more fully disclosed, through provision in connection with sewing machines of improved mechanism for governing the stitch forming and feeding elements and of improved means for controlling the stitches in such a way during their formation as to determine production of ornamentation characterized as above.

Another aim of my invention is to provide in a sewing machine having the above attributes, for the ready interchange of the parts of the mechanism for governing the stitch forming and feeding means, so that the machine may be arranged to predetermine variations in the ornamentation produced.

Other objects and attendant advantages will appear from the following detailed description of the attached drawings, wherein Fig. I is a view partly in front elevation and partly in longitudinal section, of a sewing machine conveniently embodying my invention.

Fig. II is a view of the machine partly in rear elevation and partly in longitudinal section.

Fig. III is a cross sectional view of the machine taken as indicated by the angled arrows III—III in Figs. I and II.

Fig. IV is a fragmentary detail view in plan of the throat plate of the machine drawn to a larger scale.

Fig. V is a horizontal section taken as indicated by the angled arrows V—V in Figs. I and III, with portions of the machine removed or broken away and others in section.

Fig. VI is a diagrammatic view showing how the needle of the machine is shifted to different position incident to the formation of the edging.

Figs. VII and VIII are fragmentary sectional views taken as respectively indicated by the arrows VII—VII and VIII—VIII in Figs. III and V.

Fig. IX is a diagrammatic view on an enlarged scale showing ornamental edging produced with two threads; and

Fig. X is a view like Fig. IX of generally similar ornamental edging formed from a single thread.

Except as hereinafter specifically pointed out, the sewing machine herein illustrated is generally like that featured in U. S. Patent No. 1,919,852 granted to me on July 25, 1933, having a base or bed 1 with a standard 2 at one end thereof supporting an overhanging arm 3. Fulcrumed to swing about a vertical axis 4 at the outer or distal end of the arm 3 is a yoked lever 5 in which a bar 6 is confined for axial reciprocation, said bar having a needle 7 removably secured in its lower end. The needle bar 6 is actuated by a lever 8 which swings about a stud 9 on the overhanging arm 3, and which is oscillated, through a strap rod 10, by an eccentric 11 on the drive shaft 12 of the machine. As shown, the shaft 12 is suitably journalled at its front end in a pillar 13 rising from the base 1, and at its rear end in the standard 2, said pillar also serving, in conjunction with a post 14, to sustain the work support 15 of the machine into which the throat plate 16 is set. The needle bar carrying yoke lever 5 is oscillated about its vertical fulcrum axis 4 through the medium of a horizontal link 17 from a vertical arm 18 affixed to a transverse rock shaft 19 which is journalled in bearings 20 and 21 afforded by the base 1 adjacent the standard 2. Intermediate its ends the arm 18 carries a roller 22 which engages the circumferential groove 23 of a vertically arranged cam disk 25. In accordance with my present invention, the groove 23 of the cam 25 is formed with a series of laterally spaced steps or dwells 23*a*, 23*b*, 23*c*, 23*d*, 23*e*, and 23*f*, see Fig. VI, whereof the purpose will be later on explained. As shown in Figs. I, II and VII, the cam disk 25 is removably secured by screws 26 to a gear wheel 27 which is free to revolve about a horizontal shaft 28 secured against rotation in the standard 2 at an elevation above the shaft 12, and which meshes with a driving pinion 29 on the last mentioned shaft. Slidably guided in bearing lugs 30 and 31 at the free end of the frame arm 3 is a presser bar 32 with a shank member 33 (Fig. III) at its lower end whereto is pivoted at 35, a presser foot 36. The feeding mechanism of the machine includes a feed dog 37 whereof the toothed portion operates through a slot 38 in the throat plate 16 to coact with the presser foot 36 in advancing the fabric F which is to be ornamented. The feed dog 37 is secured, with capacity for vertical adjustment, to a transversely extending horizontal feed bar 39 whereof the rear end is pivotally connected to a pin 40 carried between the upper ends

of vertical rocker arms 41 which are secured to a rock shaft 42 having journal support at opposite ends in the lugs 43 and 44 on the base 1, see Figs. II, III and V. The feed bar 39 receives its horizontal feed movements from an adjustable crank member 45 (Fig. I) at the outer end of the shaft 12, with which crank member one of the rocker arms 41 is connected by means of a horizontal link 46 (Figs. I, II, and III).

The mechanism for imparting the up and down or lift movements to the feed dog 37 is similar to that featured in U. S. Patent Number 2,103,478 granted to me on December 28, 1937. As shown, it includes a horizontally-arranged rotary disk 48 which is mounted for free rotation about a stud 49 (Fig. VIII) rising from the base 1. The circumferential groove 50 of the cam 48 is engaged by a roller 51 on the short arm 52 of a horizontal yoke 53 secured to the shaft 42, see Figs. II, III and V. The other or longer arm 54 of the yoke 53 is connected by a short adjustable vertical link 55 to the feed bar 39 near the swinging end of the latter, see Figs. III and V. In accordance with my present invention, the groove 50 of the cam 48 is formed at diametrically opposite points with vertical offsets 50*a* and 50*b* for a purpose also later on set forth. As shown in Figs. V and VIII, the cam 48 is composed of two sections 48*a* and 48*b* which are secured by means of screws 56 and 57 to a center or core plate 58 rotatively free on the stud 49. In turn, secured in axial relation to the cam 48 by screws 59, is a worm wheel 60. A washer 61 secured by a screw 62 engaging axially into the top of the stud 49, serves as a means to hold the cam 48 and the worm wheel 60 down in place on said stud. It is to be particularly noted from Fig. V that the cam 48 is split along tangential lines 63, 64 in order that its sections 48*a* and 48*b* may be readily removed edgewise from the machine for convenience of interchanging them for others when desired or required. The worm wheel 60 is driven in the direction shown by the arrow in Fig. V by an intermeshing worm 65 affixed to the shaft 12.

Arranged to cooperate with the needle 7 beneath the work support 15 is a four motion thread carrying looper 66 which is supported in a holder 67. The looper 66 receives its loop taking and shedding movements by swinging of the holder 67 about a lateral stud projection 68 on a cradle rocker 69, which, at one end is secured to a trunnion 70 having journal support in the web 13, and which at the other end is secured to a trunnion shaft 71 extending through the post 14 and a bearing lug 72 somewhat to the right of said post in Figs. I and V. Affixed to the trunnion shaft 71 in the interval between the post 14 and the bearing lug 72 is an arm 73 whereof the swinging end is forked to engage over a rotary eccentric cam 75 on the shaft 12, see Figs. I and V. The connections just described constitute the means whereby needle avoiding movements are imparted to the looper 66. As shown in Fig. I, the needle actuating lever 8 has a downward extremity 76 with which the looper holder 67 is coupled by a pair of serially arranged links 77 and 78 whereby loop taking and shedding movements are induced in the element 66. To the end of the rock shaft 19 opposite to that occupied by the vertical arm 18, is secured a horizontal arm 79 (Fig. I), which, through a short vertical link 80, is coupled with a common pivot 81 connecting the links 77 and 78, whereby the operative position of the looper 66 is changed to correspond with changes in the position of the needle 7 under the influence of the rotary cam 25.

In accordance with my present invention, the throat plate 16 is provided within its needle hole 82, with three laterally-spaced stitch fingers 83, 84, and 85 which extend in the direction of feeding (indicated by the arrows in Fig. IV in the intervals between the four dwell positions 7*a*, 7*b*, 7*c* and 7*d* determined for the needle by the rotary cam 25. The fingers 83—85 are all curved toward the edge of the fabric F which is held to a straight line path so as to travel in the illustrated instance in a line between the position 7*a* for the needle and the finger 83, by means of a guide member 86 adjustably secured to the top of the work support 15. The finger 83 nearest the fabric edge is curved but slightly, while the other two fingers 84 and 85 are more pronouncedly curved so that their ends are brought very close to the fabric edge. The fingers 84 and 85 are moreover reversely curved sharply at their ends for a reason which will presently be explained.

The machine is provided as usual with a suitable means for controlling the needle thread which is designated in Figs. I and III by the letter T. The needle thread T passes from a suitable source of supply (not illustrated) through a fixed guide eye 87, then between a pair of tensioning disks 88 on the frame arm 3, then through an eye 89 on the needle arm 8, then through another fixed eye 90 on the frame arm, then through another eye 91 on the needle arm, then under a fixed guide member 92, then through an eye 93 at the top of the needle bar 6, and finally through a second tensioning device 94 on the needle bar from whence it passes directly to the eye of the needle 7. As a consequence of this arrangement, the needle thread T is taken up each time that the needle bar 6 rises to pull up the previously formed stitch. The looper thread designated T' is drawn from a separate source of supply (not illustrated) and passes first through a fixed eye 95 on the frame arm 3, then through a disk tension 96, then through a fixed eye 97 on the base 1 (Figs. II and V), then through a spring pinch tension 98, then through a rotary take up 99 of a well-known construction operated from the shaft 12, and finally to the eye of the looper 66.

For convenience of lifting the presser foot 36 in opposition to a leaf spring 100 (Fig. II) which acts on the presser bar 32, the machine is provided with a lever 101 which is fulcrumed intermediate its ends on a pivot stud 102 projecting laterally from the frame arm 3. The end of the short arm 101*a* of the lever 101 is normally held down in contact with a fixed stop 103 on the frame arm 3 by a helical tension spring 104 and underreaches a lateral stud projection 105 on the presser bar 32. The lever 101 is connected through a link rod connection 106, with an operating foot treadle, not illustrated. By means of the latch shown at 107 in Figs. I–III, the presser foot 36 may be locked in raised position when necessary or desired.

The operation of the machine is as follows: Assuming the fabric F to be stationary and the needle 7 in the position 7*a* in Fig. IV which is determined by the step 23*a* of the cam 25, see Fig. VI. In making its first reciprocation, the needle 7 passes through the fabric F immediately inward of the edge E, (which as hereinbefore described, is directed by the guide) and as a consequence of its coaction with the looper 66, a stitch 110 (Fig. IX) is formed. As the cam 25

rotates in the direction of the arrow in Fig. VI, the needle is moved laterally to the position 7*b* by the step 23*b* of said cam, and in making its succeeding reciprocation passes down through the interval between the fingers 83, 84 beyond the edge of the fabric, with the result that the stitch 110 is completed over the finger 83 and a new stitch 111 (Fig. IX) is formed. As the cam 25 rotates further, the needle is brought to the position 7*c* by the step 23*c* and reciprocated in the interval between the fingers 84, 85 with completion of the stitch 111 over the finger 84 and the formation of another new stitch 112. Upon further movement of the cam 25, the needle is brought to the position 7*d* by the step 23*d* and is reciprocated beyond the finger 85 with attendant completion of the stitch 112 over said finger and the formation of another new stitch 113. During the completion of the instant rotation of the cam 25, the direction of lateral needle shifting is reversed as the roller 22 successively passes through the step 23*e* (which corresponds to step 23*c*) and the step 23*f* (which corresponds to step 23*b*) and finally re-enters the step 23*a*, with attendant positioning of the needle successively in the positions 7*c*, 7*b* and 7*a* and formation of the stitches 113, 114 and 115 over the fingers 85, 84 and 83. In this excursion of needle shifting, a flat loop L of six chain stitches is formed, whereof the first and last stitches 110 and 115 pass through the fabric at the same point. Through two more needle excursions in precisely the same manner, the fabric F still stationary, additional loops L′ and L^2 are formed with the first and last stitches of each passing through the fabric at the same point as the first and last stitches of the first loop L as clearly shown in Fig. IX. Due to the complemental curving of the stitch fingers 83—85 and taking up on the needle and looper threads T, T′ incident to stitch formation, the chain stitch loops L, L′ and L^2 are caused to shift toward the edge of the fabric as shown in Fig. VI, but are detained by the reversely curved ends of the fingers 84, 85. As a consequence of this control, it will be seen that the individuality of the loops L—L^2 is preordained. During the next rotation of the cam 25 after completion of the three loops L—L^2, a chain C of six stitches 117, 118, 119, 120, 121 and 122 is produced. However, just before the formation of the last stitch 122 of this chain C, the fabric F is shifted by momentary lifting of the feed dog 37 through actuation of the yoke member 53 by one of the rises 50*a*, 50*b* of the rotary cam 48, so that the said last stitch 122 is caused to penetrate the fabric at a point further along the edge of the latter as clearly shown in Fig. IX, with the intermediate loops of the chain entirely free of the fabric edge. By the shift of the fabric F as just explained, the loops L—L^2 are pulled off and away from the stitch fingers 83—85, the edge ornamentation resulting from repetitions of the above cycle. Upon release, the flat loops L—L^2 constituting the unit figure M of the design take radial positions relative to the point at which the fabric is penetrated by the needle and thus create a sunburst effect as shown in Fig. X, wherein the needle thread T has been stippled so that it may be readily distinguished from the looper thread T′. The throw of the feed dog 37 is preferably so adjusted as to determine breaking of each chain C at the middle with its two segments extending radial to the centers of the two adjacent figures M which it connects.

By changing the number of steps in the rotary cam 25, the number of stitch fingers, the number of rises in the cam 48, and/or the ratio of the gears 27, 29 and 60, 65, it will be evident that considerable variation may be had in the design of the ornamentation.

As a further alternative, by substituting a spreader for the thread carrying looper 66, it is possible to produce designs such as shown in Fig. X with the needle thread T alone. How the latter change may be effected will be readily understood by those familiar with the operation and use of sewing machines without the need of separate illustration or further explanation.

FREDERICK LUTZ.

PUBLISHED

MAY 11, 1943.

BY A. P. C.

F. LUTZ

EDGE ORNAMENTATION FOR FABRICS AND IN METHODS AND MACHINES FOR PRODUCING IT

Filed Sept. 8, 1939

Serial No. 293,903

6 Sheets-Sheet 1

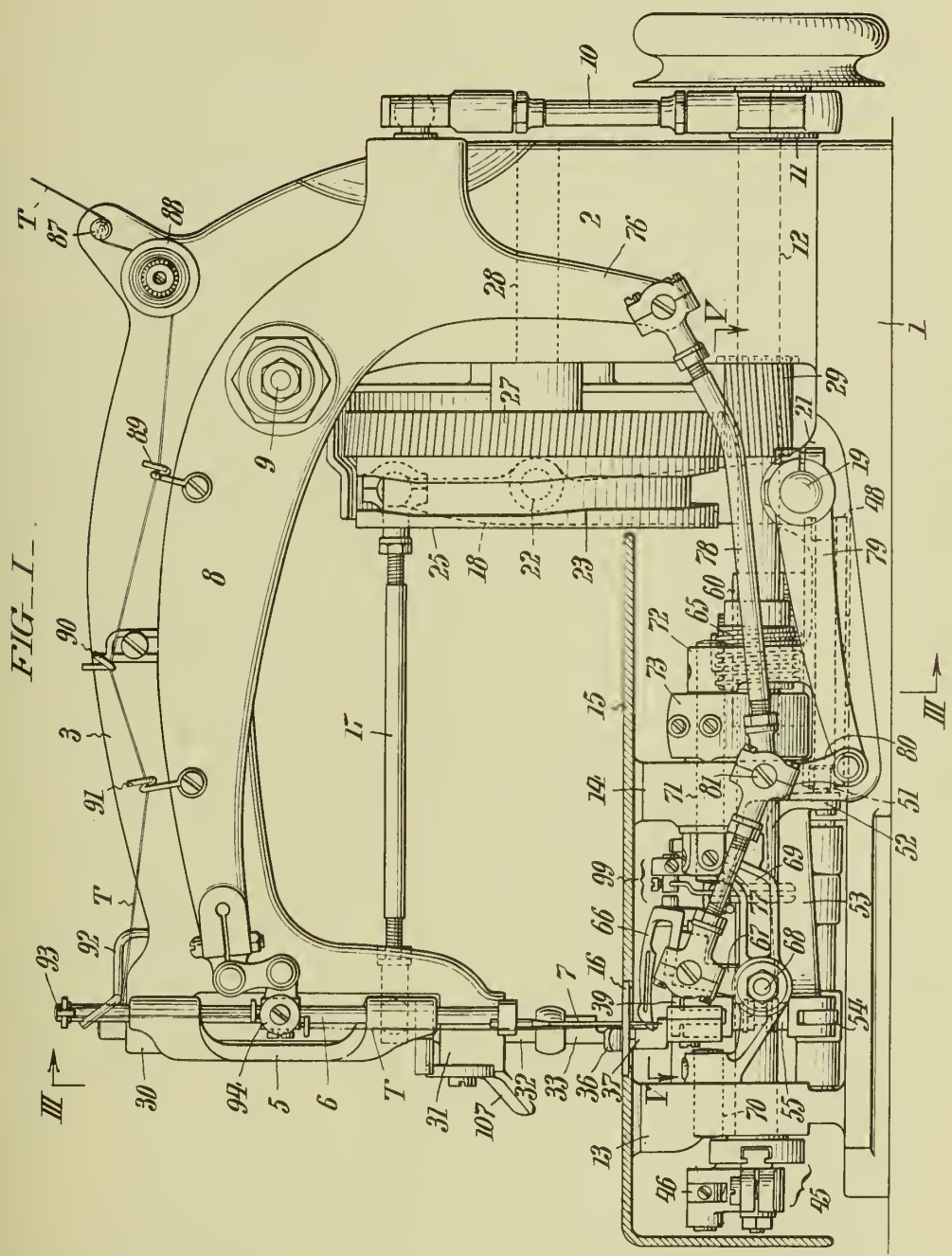

WITNESSES:

Hubert Fuchs

William Bell, Jr.

INVENTOR:

Frederick Lutz,

BY Paul Paul

ATTORNEYS.

PUBLISHED

MAY 11, 1943.

BY A. P. C.

F. LUTZ

EDGE ORNAMENTATION FOR FABRICS AND IN METHODS AND MACHINES FOR PRODUCING IT

Filed Sept. 8, 1939

Serial No. 293,903

6 Sheets-Sheet 2

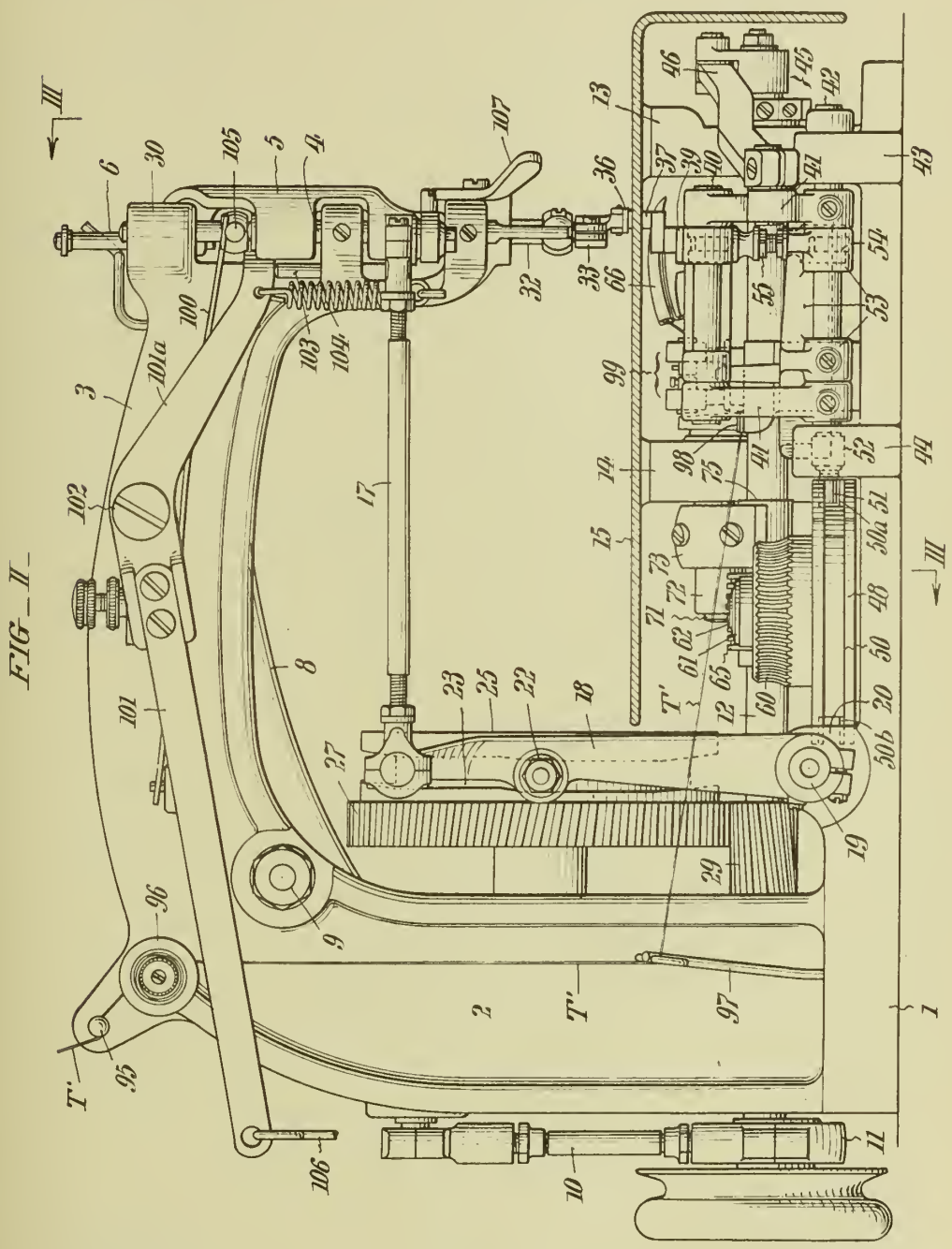

FIG. 11

WITNESSES:

Hubert Fuchs

William Bell, Jr.

INVENTOR:

Frederick Lutz,

BY Paul & Paul

ATTORNEYS.

PUBLISHED

MAY 11, 1943.

BY A. P. C.

F. LUTZ

EDGE ORNAMENTATION FOR FABRICS AND IN METHODS AND MACHINES FOR PRODUCING IT

Filed Sept. 8, 1939

Serial No. 293,903

6 Sheets-Sheet 3

FIG. IV.

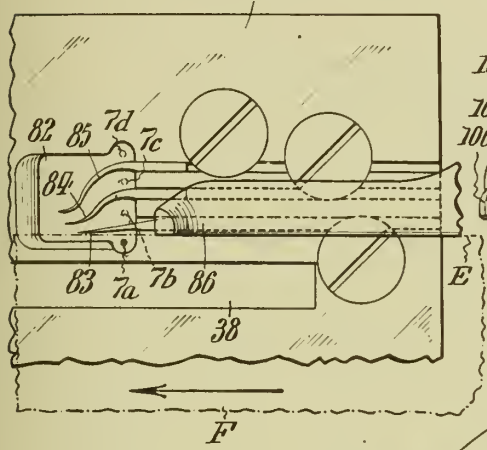

FIG. III.

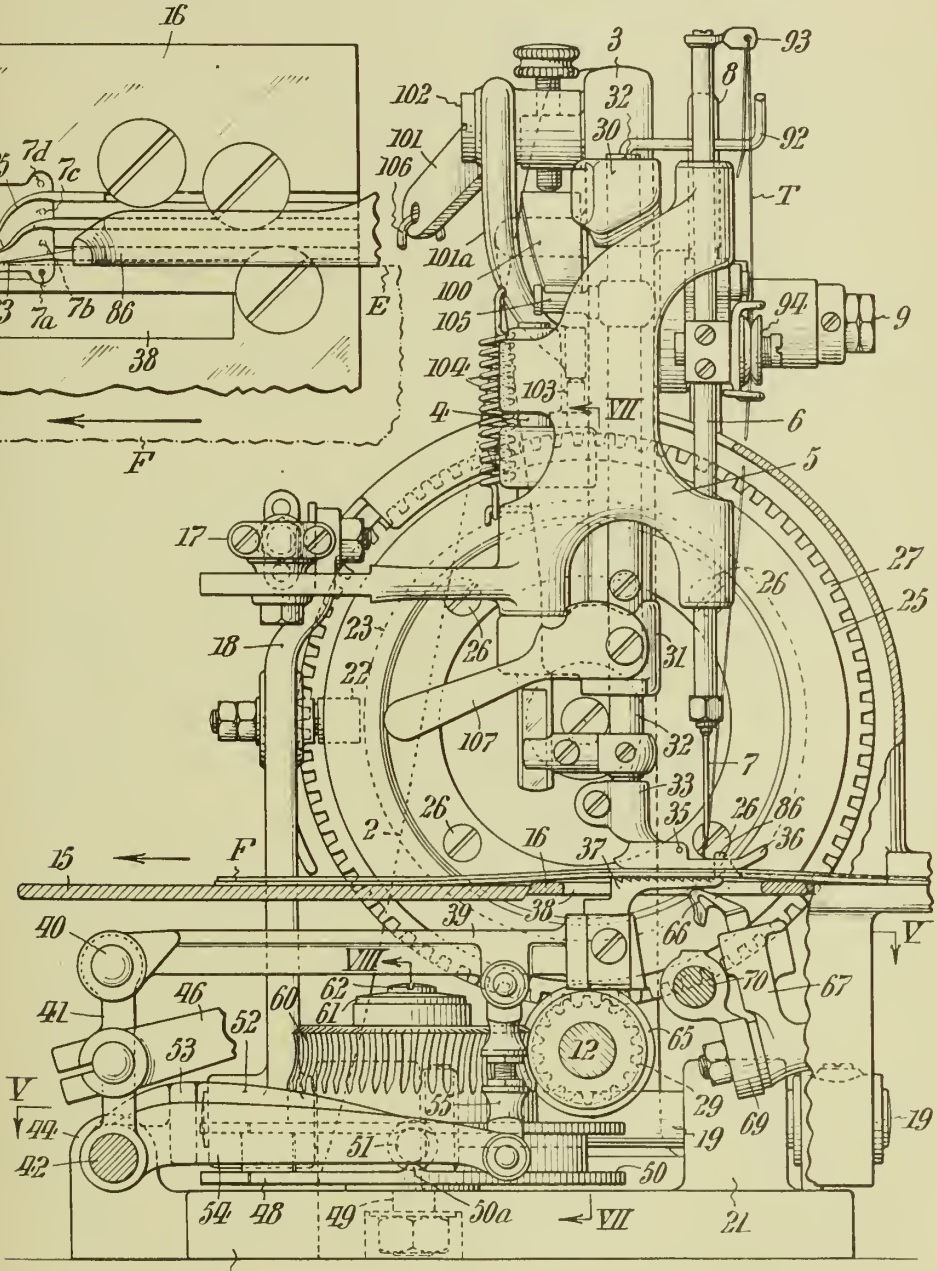

WITNESSES:

Hubert Fuchs

William Bell, Jr.

INVENTOR:

Frederick Lutz,

BY Paul & Paul

ATTORNEYS.

PUBLISHED

MAY 11, 1943.

BY A. P. C.

F. LUTZ

EDGE ORNAMENTATION FOR FABRICS AND IN METHODS AND MACHINES FOR PRODUCING IT

Filed Sept. 8, 1939

Serial No. 293,903

6 Sheets-Sheet 4

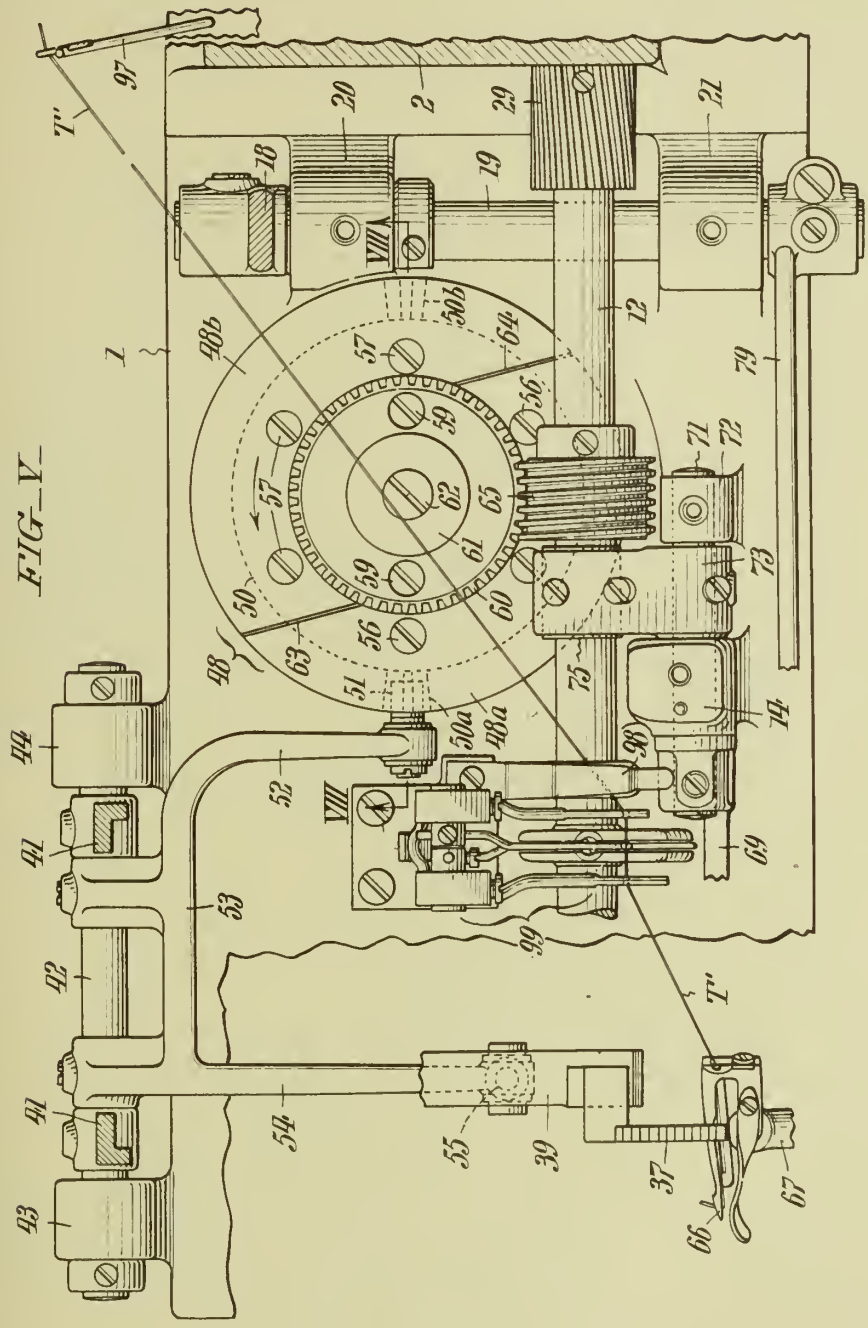

WITNESSES:
Hubert Fuchs
William Bell, Jr.

INVENTOR:
Frederick Lutz,
BY Paul Paul
ATTORNEYS.

PUBLISHED

MAY 11, 1943.

BY A. P. C.

F. LUTZ

EDGE ORNAMENTATION FOR FABRICS AND IN METHODS AND MACHINES FOR PRODUCING IT

Filed Sept. 8, 1939

Serial No. 293,903

6 Sheets-Sheet 5

FIG. VI.

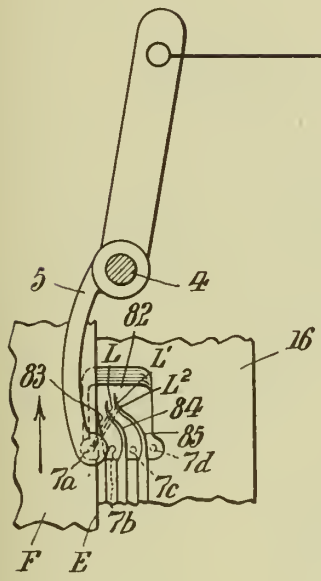

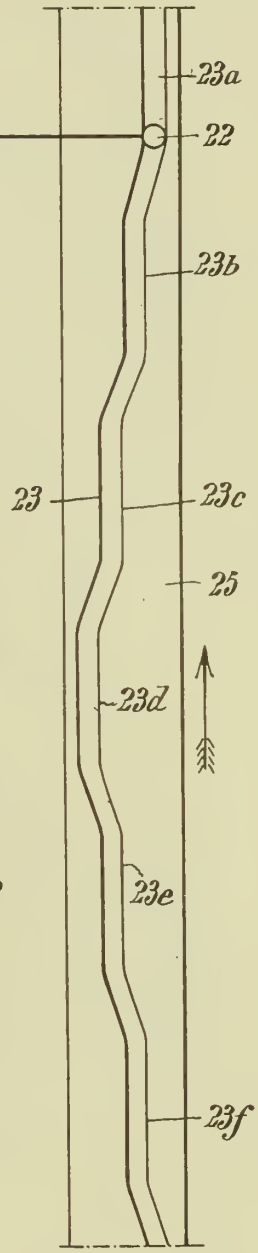

FIG. VII.

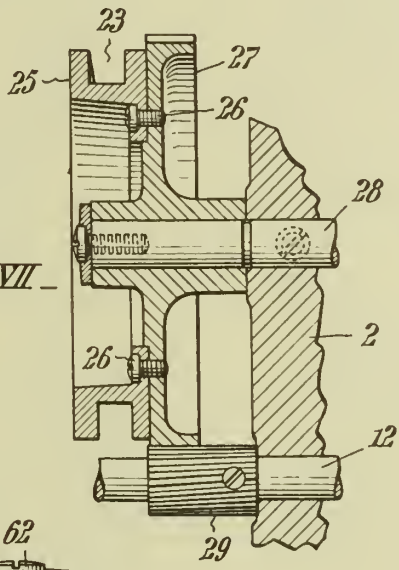

FIG. VIII.

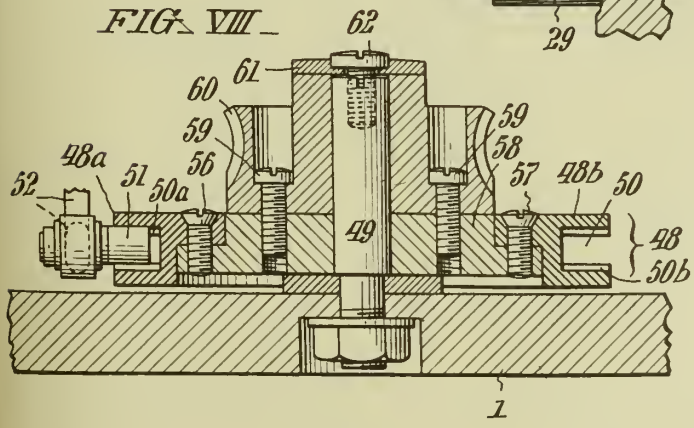

INVENTOR:
Frederick Lutz,

BY Paul & Paul

ATTORNEYS.

PUBLISHED

MAY 11, 1943.

BY A. P. C.

F. LUTZ

EDGE ORNAMENTATION FOR FABRICS AND IN METHODS AND MACHINES FOR PRODUCING IT

Filed Sept. 8, 1939

Serial No. 293,903

6 Sheets-Sheet 6

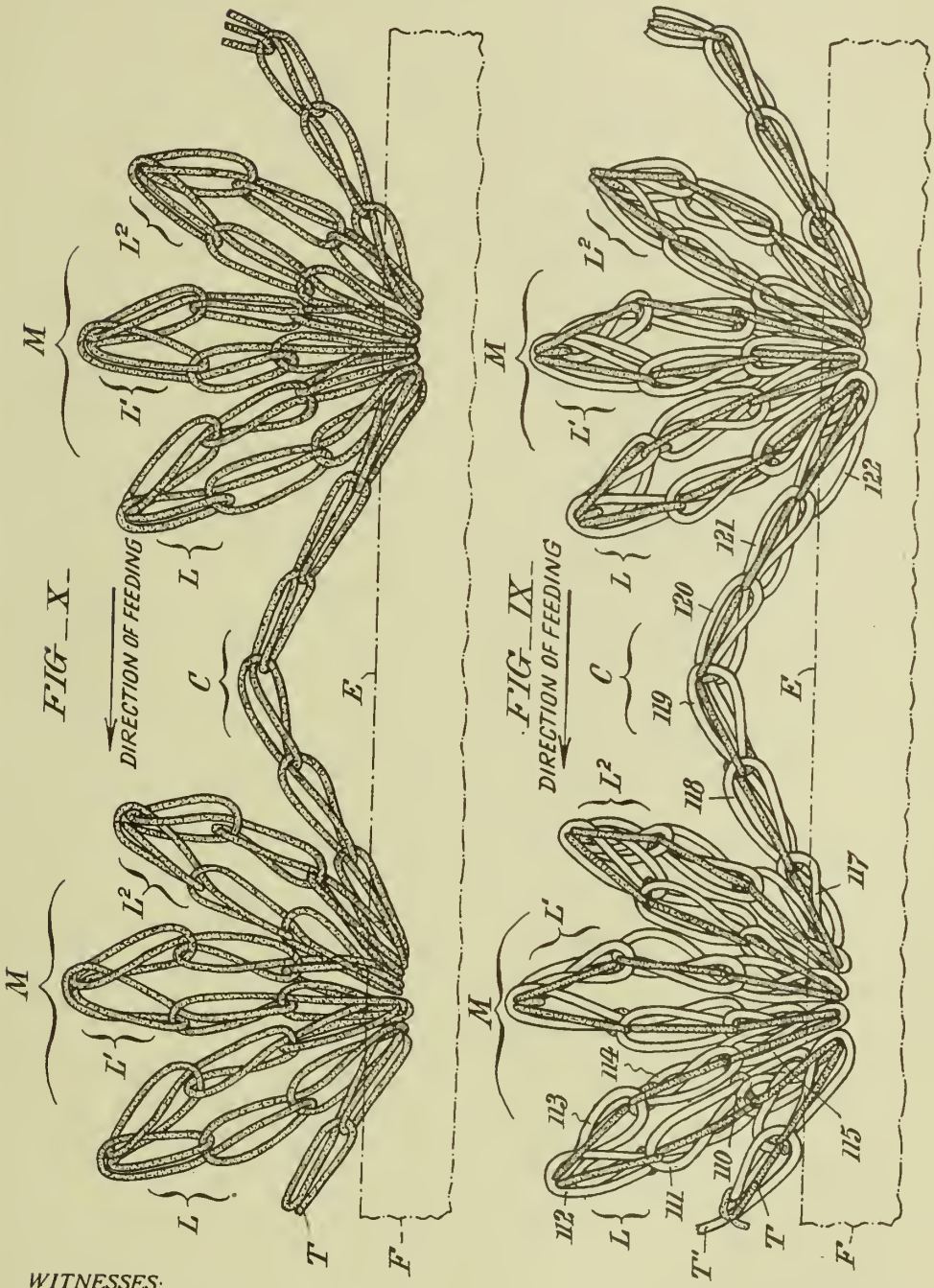

WITNESSES:

Hubert Fuchs

William Bell, Jr.

INVENTOR:

Frederick Lutz,

BY Paul & Paul

ATTORNEYS.

Published May 11, 1943

Serial No. 296,469

ALIEN PROPERTY CUSTODIAN

AIR COOLED RADIAL ENGINE

Erwin Schnetzer, Munich, Germany; vested in the Alien Property Custodian

Application filed September 25, 1939

The invention relates to the conformation of air cooled radial engines and particularly to double-row radial engines with fuel injection and wherein a charging blower with one or more stages is used.

It is known, in connection with radial engines, to fit the blower for precompressing the charging air at the rear of the engine. The air is lead to the blower through intake hoods or through pipes which are arranged outside along the engine covering and terminate within the front part of the engine cowling.

With the usual form of construction the air stream is deflected by 180° on its way to the blower and is subjected to a further deflection of about the same amount within the cylinders of the engine.

In this manner there will not only occur a loss in output owing to the increased flowing resistance in the pipes and the air resistance caused thereby, but also the arrangement of the guide means for the air must be realized at the cost of simplicity and clearness.

For eliminating these disadvantages the invention proposes to arrange the blower coaxially with the crank shaft at the crankcase between engine and propeller. In addition to that the blower is provided on the one hand with one or more suction pipes, which may be of annular form and surround the casing between blower and propeller and on the other hand put in connection with the inlet openings of the cylinders, in case of need by interposing a cooling device for reducing the temperature of the charging air which has passed the blower. The cylinder heads or the corresponding inlet and outlet valves are preferably arranged so that the plane through the valve stems of each cylinder will coincide with the direction of the longitudinal axis of the engine so that the charging air stream will flow in a direction opposite the direction of travel or flight and find its continuance in the exhaust gases escaping in the same direction.

In this way there is obtained a most simple arrangement of the pipes which not only involves considerable advantages as to the manufacture, but also regarding the guidance of the charging air and of cooling air stream. Further there is avoided an additional air resistance of the vehicle or the aircraft by the arrangement of the pipes outside the engine covering.

Another essential advantage obtained by the arrangement according to the invention consists in the fact that the auxiliary devices as the starter, the dynamo etc. may be mounted directly to the crankcase as originally made in radial engines without blowers, thus partly eliminating the disturbances produced by the disadvantageous arrangement of the auxiliary devices caused for want of place, which is of great importance especially in airplanes.

Furthermore it is now possible owing to the increased dimensions of the space available behind the engine, instead of pipes to arrange for the exhaust gases an annular pipe which may be provided with cooling ribs and located in the vicinity of the spreading flaps or of a sliding ring for controlling the outflow cross sectional area of the cooling air, so that the exhaust gases, distributed substantially uniformly around the entire periphery of the engine covering, pass out eventually together with the cooling air and serve by so doing in an advantageous manner for the production of an additional propelling force on the vehicle or the aircraft, for instance by smoothing the eddies occurring on the surface of the vehicle or the aircraft or by accelerating the limit air layer.

The valve timing of the engine constructed according to the invention is preferably effected by operating all valves by two cam rings or cam discs or the like of which one is arranged in front of the engine and the other behind it, the first serving for timing all inlet valves and the second for timing all outlet valves. The advantage of mode of operating the valves resides, besides in the simplicity of the members needed for the operation, in the possibility to effect in a simple manner a modification of the timing relation of the inlet and outlet valves by turning one of the cam rings or discs.

One example of construction of the subject of the invention is shown in a simplified form in the accompanying drawing, wherein

Fig. 1 shows a double row radial engine according to the invention; and

Fig. 2 shows a cross section on the line A—A in Fig. 1.

The double row radial engine **1** represented in the drawing is in driving connection with a propeller (not shown in the drawing) turning about the longitudinal axis **2** and propelling the vehicle or aircraft in the direction **3**. The inlet valves **4** are operated by the push rods **5**, and the outlet valves **6** by means of the push rods **7**. To the engine **1** there are applied in the direction of the propeller, coaxially to the longitudinal axis **2**, the cam disc (not shown in the drawing) for the inlet valves, the charging blower **8** with annular suction pipe **9** which is provided with a

filter 10 to prevent dirt from entering it, the multiplication gear 11 for the blower 8 and the reduction gear 12 between engine 1, and propeller. On the rear of the engine 1 there is provided the cam disc, to begin with, (not shown in the drawing) for the outlet valve. Further there are located the auxiliary devices 13 and the exhaust pipes 14 of all cylinders 15, which lead to an annular pipe 17 provided with cooling ribs 16. The exhaust gases leave the annular pipe 17 in the vicinity of the sliding ring 18 for controlling the outflow cross sectional area 20, provided in the engine covering 19, and flow out in the direction 21. It is of course also possible to discharge the exhaust gases of the cylinders 15 by separate pipes terminating in the vicinity of the outflow cross sectional area 20.

As already known it answers best the purpose to be obtained, no matter whether separate pipes or one annular pipe 17 are used, to reduce the cross sectional area of these guide means in the direction of flow 21 of the gases so that they pass out at a higher velocity than that of the air which passes over the engine covering 19 or the fuselage part 22 adjacent thereto, thus producing an additional propelling force and smoothing out the eddies on the surface of the vehicle or aircraft by this utilising a great part of the energies still inherent in the exhaust gases.

Furthermore, reference is made to special construction of the walls 26 shown in section in Fig. 2, which provide a rigid connection of the opposite parts of the casing forming the suction pipe 9 of the blower 8. By selecting the form of construction of the walls 26, as shown in the drawing there is not only obtained a high bending and torsion strength of the corresponding parts, but also the possibility to connect the control members or the like in the front part of the crankcase or of the propeller with the auxiliary devices 13 or the pilot's cockpit. A further advantage of this form of construction consists in that by the arrangement of walls in the suction pipe of the blower the filaments of flow will be straightened. By a proper selection of the direction of the walls 26 these may simultaneously impart a twist to the air passing over them.

In the case of the construction and the arrangement of a double row radial engine according to the invention as described, which, however, also may be applied to radial engines with one or more rows, in the latter case after a modification of the valve timing, the air stream entering the covering 19 is divided into the charging air stream 23 and the cooling air stream 24, the latter passing over the engine and its charging air pipes 25 and the exhaust pipes 14 or the annular pipe 17. Instead of the pipes 25 a charging air cooler may be fitted with great advantage. The approximate course of the air stream being divided in the manner described and entering the covering 19 is indicated by arrows.

ERWIN SCHNETZER.

PUBLISHED
MAY 11, 1943.
BY A. P. C.

E. SCHNETZER
AIR COOLED RADIAL ENGINE
Filed Sept. 25, 1939

Serial No.
296,469
2 Sheets-Sheet 1

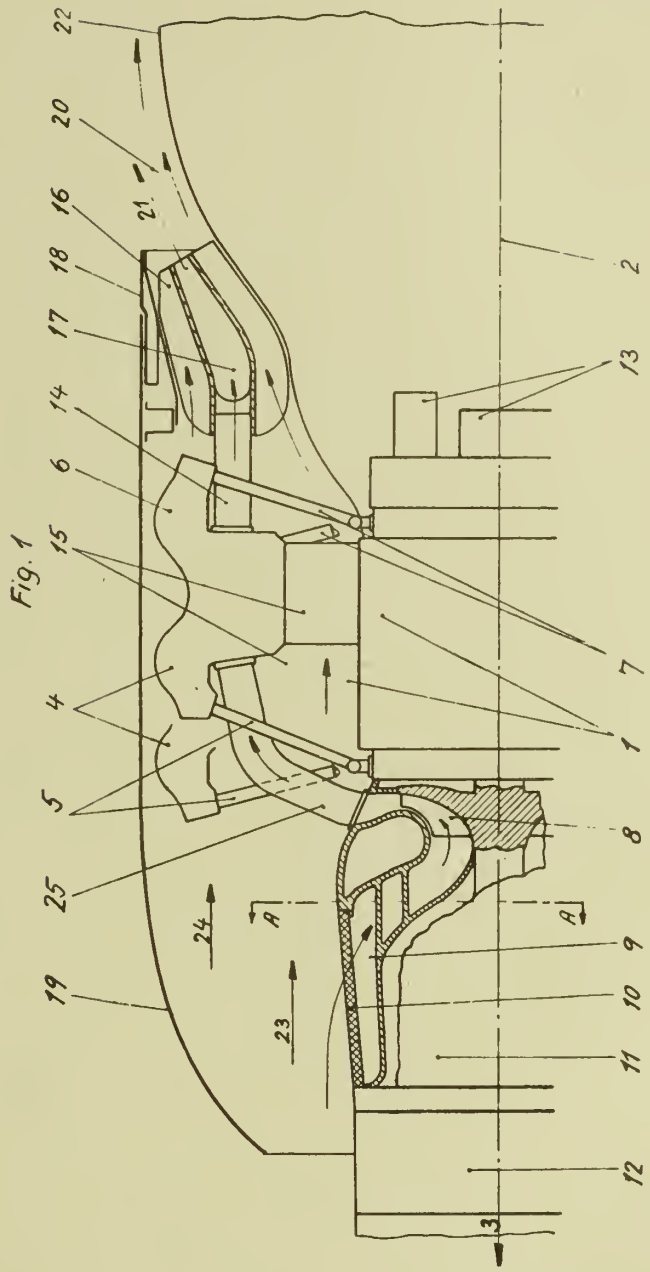

Fig. 1

Erwin Schnetzer
Inventor
By A. A. Wicke
Attorneys

PUBLISHED
MAY 11, 1943.
BY A. P. C.

E. SCHNETZER
AIR COOLED RADIAL ENGINE
Filed Sept. 25, 1939

Serial No.
296,469
2 Sheets-Sheet 2

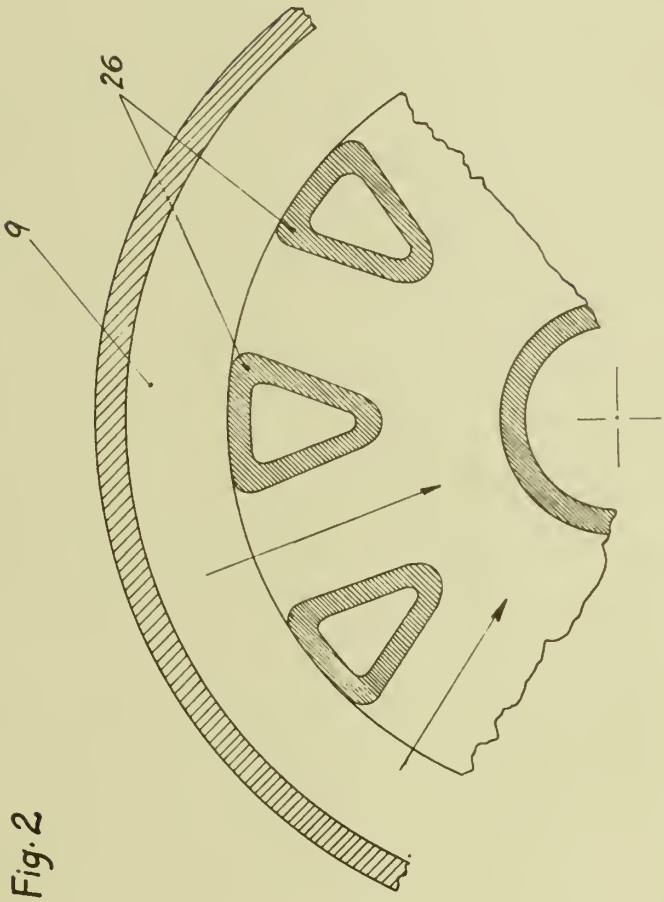

Fig. 2

Erwin Schnetzer
Inventor
By A. A. Wicke
Attorneys

Published May 11, 1943

Serial No. 296,515

ALIEN PROPERTY CUSTODIAN

METHOD OF STRAIGHTENING METAL BARS

Rudolf Schmidt, Vienna, Germany; vested in the Alien Property Custodian

Application filed September 25, 1939

The invention relates to a method of straightening metal bars.

Hitherto metal bars have been straightened in straightening machines in which the bars are positively guided between pairs of rolls, any kinks or bends being thereby removed. These straightening machines are heavy and expensive, the method of straightening the bars is comparatively protracted and costly, and the resulting product is not really straight but a bar with small, mutually compensating bends. Moreover, there is no testing of the material, so that defective bars are also treated in the straightening machines. The thicker the bar to be treated, the more expensive the straightening machine, or the more difficult or impossible is it to obtain a properly straightened product.

Present-day practice aims at coiling even comparatively thick bars on reels direct after hot rolling, in order to obtain at will bars of maximum length and to save room. However, this endeavour is checked by the inadequacy of the existing straightening machines and straightening methods.

The present invention remedies these defects by a new and improved method of straightening bars of any convenient cross section, which method comprises twisting the bars individually either in the cold or when hot. In the former case, consolidation of the bar material takes place.

According to the kind and sectional dimensions of the material, the twisting may be accompanied or not by the application of a supplementary axial tensioning of the bar. In some cases it may be desirable, or necessary, to apply a constant tension to the cross section of the bar during the twisting operation under the condition that, in the case of bars which shorten in twisting, the spacing of the clamps is shortened, whilst, in the case of bars which stretch in twisting, the clamps are moved further apart.

The bars may also be suitably straightened by first twisting them in one direction of rotation and then, to the same extent, in the other. This treatment is particularly suitable for straightening bars the cross section of which differs from the circular form. The twisting in one direction may be done with the bar hot and in the other direction in the cold, whereby a consolidation of the bar material takes place.

In carrying out the method of the invention the bar to be straightened may be unwound from a reel and clamped in the twisting head of a torsioning machine. The material may also, for example, be unwound from a reel and so twisted at the same time that the length of the portion of bar being twisted stretches during the operation. For this purpose, either the twisting head, or the braking device, can be arranged so as to be longitudinally movable, for example by being mounted on rollers or a carriage or the like. A clamping head may advantageously be replaced by a device which brakes the torsional and axial movement. By this means any tensional stress which may be required can be maintained at a constant value.

Experience has shown that even stout sections can also be completely straightened and entirely freed from all links and bends resulting, for example, from rolling, forging, the cold bed, etc., and also those due to the original coiling on the reel. Furthermore, the method according to the invention is simple and inexpensive and, at the same time, the twisting serves to test the quality of the bars under treatment, since bars containing defects in the material rupture when twisted.

For carrying out the process according to the invention, any convenient twisting machine with rotatable clamping head can be employed, care being preferably taken to enable an axial tension stressing to be applied to the cross section of the bars to be twisted.

Two modes of carrying out the method into effect are represented diagrammatically by Figs. 1 and 2 of the accompanying drawing to which reference will now be made.

As shown in Fig. 1, the bar **1** to be straightened is unwound from a reel **2** on which it has been previously wound direct after hot rolling. The said bar is guided over a fixed curved guide member **3** and its end is clamped in the twisting head **5** of a torsioning machine mounted on a carriage **4** for displacement in the direction of the arrow *a*. As the twisting head **5** is rotated to twist the bar **1** the torsioning machine is movable to apply a tension to the bar.

According to Fig. 2 the bar **1** to be straightened by twisting passes between the rollers **6** of a braking device **7** which in this instance is movable axially of the bar as represented by the arrow *b*, the torsioning machine being stationary.

RUDOLF SCHMIDT.

PUBLISHED

MAY 11, 1943.

BY A. P. C.

R. SCHMIDT

METHOD OF STRAIGHTENING METAL BARS

Filed Sept. 25, 1939

Serial No.

296,515

Fig. 1

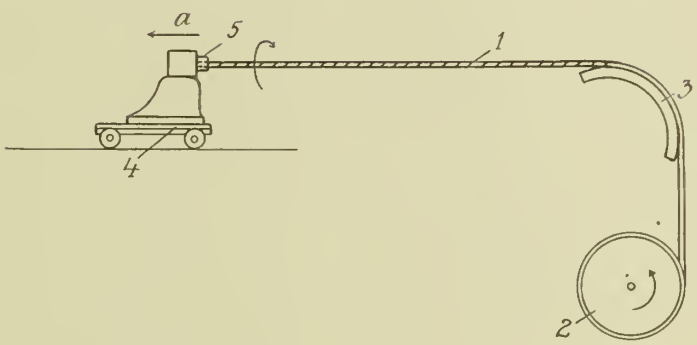

Fig. 2

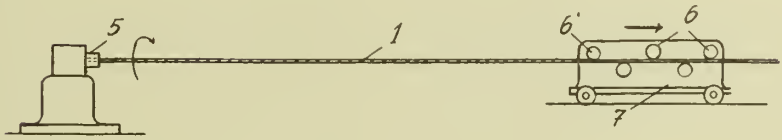

Inventor:
Rudolf Schmidt
By J. Shurine
Atty.

Published May 11, 1943

Serial No. 296,630

ALIEN PROPERTY CUSTODIAN

CHARGE-COOLERS FOR RADIAL ENGINES

Theodor Helmbold, Munich, and Konradin Keller, Lochham/Munich, Germany; vested in the Alien Property Custodian

Application filed September 26, 1939

This invention relates to the arrangement and construction of charge-coolers located behind the central plane through the cylinders of air-cooled radial engines.

Charge-coolers are known in many different forms of construction. It is common to all these previous constructions that the charge-coolers are arranged in a direction extending from the cylinder head of one cylinder to the cylinder base of the adjacent one. When disassembling a cylinder there is a necessity of disassembling 2 coolers, i. e. the one belonging to it and besides that a second one the point of connection of which is located behind the first one. This last mentioned cooler partly covers the cylinder head screws and does not permit the loosening of them thus preventing a rapid and easy dismantling.

These drawbacks are eliminated in such a manner that the cooler is arranged according to the invention so that it extends from the connecting branch at the inlet valve parallel or approximately parallel to the axis of the engine. Each cooler consists of a nest of tubes surrounded by a cooling jacket and through which the air charge is flowing. Because of the covered position of the cooler relatively to the direction of flight the cooling jacket has an extension reaching into the space between the valve casings and assumes at its end a form of a spout to improve the air entrance, so that the cooling air is taken from the sphere of dynamic pressure in front of the cylinders. The cooling air entering the funnel-shaped opening flows within the cooling jacket along the charging air tubes and leaves the jacket at the connecting point of the tube leading to the blower. Owing to the simple and straight-lined arrangement of the cooling jacket in the direction of flight there is obtained a high velocity of the cooling air within the cooler and thus an effective cooling of the air charge, which is very important in connection with the dimensions of the cooler.

This form of construction of the charge cooler is applied with special advantage with engines in which the energy inherent in the exhaust gases, is utilised to produce an additional propelling force by discharging them through nozzles.

In this case the air leaving the cooler in a relatively cool condition may be used without special guide means together with the air passing over the cylinders for the cooling of the exhaust gases which results in the heating of both. In this manner and owing to the high velocity it contributes to increase the propelling force.

The conduits for the air charge and also the jacket or the conduits for the cooling air may be of any cross section and at their length being straight, curved or of any other form. In order to increase the surface impinged by the cooling air, the cooling jacket containing the tube nest and being arranged parallel to the engine axis may have an arc-shaped extension leading to the connecting branch of the blower, so that it assumes the shape of a rearwardly extending hair pin and extends in a plane through the cylinder induction branch and the engine axis. With this form of construction the cooling air which may be conducted to the air charge conduits in continuous or counter flow or in any other way, likewise enters the space between the valve casings and leaves the cooling jacket only through an opening in the vicinity of the blower branch. It is true that the deflection of the cooling air stream will somewhat reduce its velocity thus diminishing the cooling effect, which is however compensated with this form of construction by extending the cooling jacket and the tube nest to the blower branch.

Some examples of construction of the cooler according to the invention are shown in the accompanying drawings:

Fig. 1 shows a side elevation of the cooler extending parallel to the engine axis;

Fig. 2 a side elevation of the cooler of hair pin shape;

Fig. 3 a view in the direction of the engine axis.

The tube nest 1 for cooling the air charge is connected to the cylinder by the branch 2 at the inlet valve casing and to the blower casing by the connecting pipe 3. The cooling jacket 4 surrounding the tube nest 1 serves as guide means for the cooling air. To improve the entrance of the cooling air the jacket 4 has an extension reaching into the space between the valve casings and assumes at its end a spout-shaped opening 5. The air entering through this opening passes along the tube nest 1 and leaves the cooling jacket 4 at the outlet opening 6 at the connecting point of the tube nest with the connecting pipe.

Fig. 2 illustrates a further form of construction, which only differs from the above described in that the cooling jacket 4 containing the tube nest 1 is extended to the blower branch 7. The cooling air leaves the jacket 4 through its opening 8 in immediate vicinity of said branch 7. As shown in Fig. 3 the cooler extends in a plane through the cylinder induction branch and the engine axis.

T. HELMBOLD.
K. KELLER.

PUBLISHED

MAY 11, 1943.

BY A. P. C.

T. HELMBOLD

CHARGE-COOLERS FOR RADIAL ENGINES

Filed Sept. 26, 1939

Serial No.

296,630

2 Sheets-Sheet 1

Fig. 1

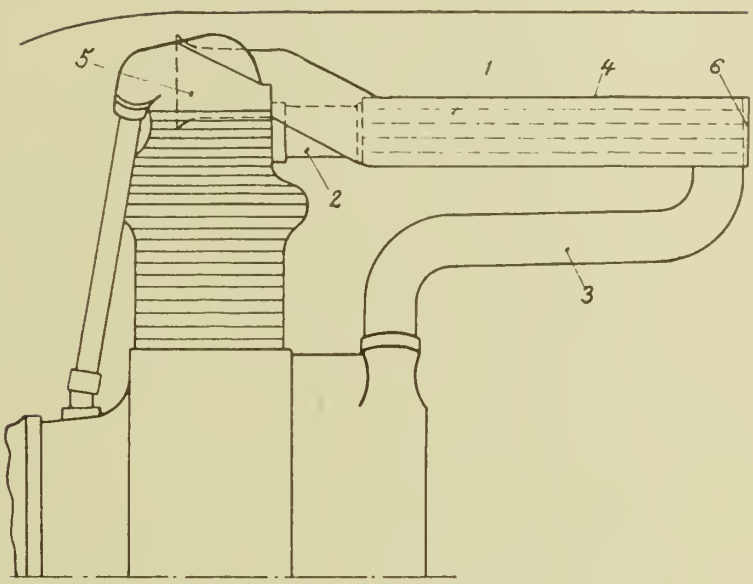

Theodor Helmbold
Konradin Keller
Inventors
By A. A. Wicke
Attorneys

PUBLISHED

MAY 11, 1943.

BY A. P. C.

T. HELMBOLD

CHARGE-COOLERS FOR RADIAL ENGINES

Filed Sept. 26, 1939

Serial No.

296,630

2 Sheets-Sheet 2

Fig. 2

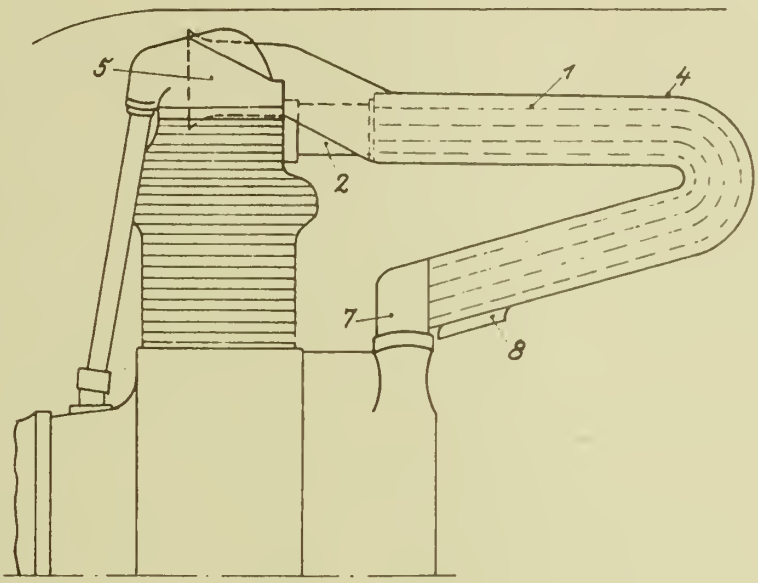

Fig. 3

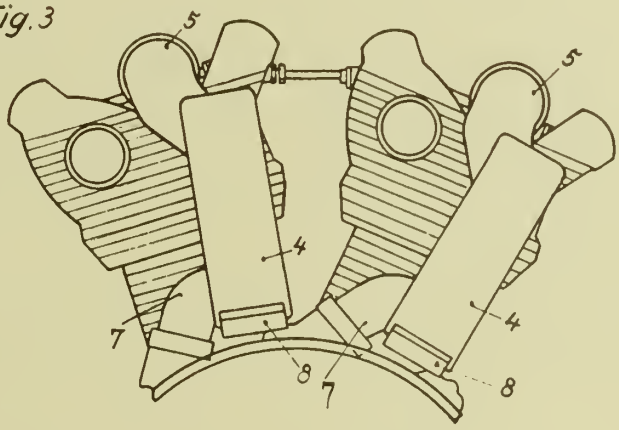

Theodor Helmbold
Konradin Keller
Inventors
By A. A. Kleiche
Attorneys

Published May 11, 1943

Serial No. 296,654

ALIEN PROPERTY CUSTODIAN

AIR CHARGE COOLING DEVICE

Kurt Löhner and Peter Kappus, Munich, Germany; vested in the Alien Property Custodian

Application filed September 26, 1939

This invention relates to a cooling device for the charging air for air-cooled radial engines especially double-row radial engines with the blower arranged in front of the cylinders seen in the direction of movement.

By precompressing the air in the blower the temperature of the charging air is raised as is known to such a degree that this will have a deleterious influence upon the working conditions and particularly on the charging degree of the engine and consequently on the output yield. In the constructions hitherto known provision was made for this reason to make the charging air flow through coolers interposed between the blower which is arranged behind the cylinders and the corresponding cylinder.

The object of the invention is applied as already mentioned in the foregoing, to engines with the blower arranged in front of the cylinders and differs considerably from the constructions already known.

The device according to the invention will be arranged like the corresponding blower in front of the cylinders seen in the direction of movement and is flown through by the undivided cooling air stream for the cylinders. In this manner not only the whole of the entering air is conducted to the cooling device, but also fresh air in contrast to the arrangements hitherto known in which the air after passing over the cylinders was already preheated. The increase in temperature of the cooling air for the cylinders resulting therefrom is not essential and may be compensated by slightly increasing the air entrance cross sectional area in the engine covering or by correspondingly increasing the output of the blower.

According to the invention there is provided around the periphery of the blower an annular cooler which may be subdivided in single coolers, in which case the intermediate spaces between two neighbouring coolers may, if existent, be provided with baffles. The annular cooler or the single coolers comprises tubes arranged radially or parallel or approximately parallel relatively to each other which in order to obtain a great surface and a more efficient transfer of heat are given a great length relatively to their width. To further increase the cooling effect the tubes are connected externally by means of plates or ribs being arranged normal to the tubes and at a distance of spacing one upon another. Besides that they are arranged in such a manner that the longitudinal axis of their cross sections coincides or approximately coincides with the direction of movement. To stiffen the tubes and to further increase the heat transfer from the charging air to the plates or ribs and finally to the cooling air the tubes according to the invention are subdivided by walls into a plurality of conduits.

A further advantage of the construction consists in the fact that a certain number or all cylinders have a common cooler which causes the charging air for more cylinders to flow at first through the tubes of the coolers, which are located in a plane extending more or less vertically to longitudinal axis of the engine and terminate on a level with the cylinders heads, after which the charging air is deflected about 90° by means of guide plates and being distributed only then to the different suction pipes leading to the cylinders.

Further details and advantages will be understood from the following description.

The invention is diagrammatically illustrated by way of example in the accompanying drawings, wherein:

Figure 1 is a longitudinal section of the cooler according to the invention, the section plane extending between two tubes in a radial direction relatively to the longitudinal axis of the engine.

Fig. 2 is a section on line A—A and

Fig. 3 is a section on line B—B of the cooler according to Fig. 1.

In front of the plane extending through the cylinders 2 of a radial engine seen in the direction of movement 1 there is arranged coaxially with the longitudinal axis of the engine a charging blower 3 shown in the drawing partly in section, to which the charge cooler 4 is attached. The charge cooler comprises tubes 5 which are of great length relatively to their width and between which there are arranged parallel cooling plates 6 in spaced relation one upon another surrounding the tubes and extending vertically to their longitudinal direction. On both their ends 7 and 8 the opposite walls of two neighbouring tubes 5 are connected with one another so that, as shown in Fig. 2, the resistance to the charging air stream flowing through the coolers 4 is as low as possible.

Near the upper end of the tubes 5 begin the guide plates 9 which lead the charging air stream into the suction pipes 1 serving to connect the coolers to the cylinders.

To increase the heat transfer and the strength of the tubes 5 these may be provided with walls 11, as shown in Fig. 3 thus dividing each tube 5 into a number of conduits 12.

The course of the charging air stream 13 and of the cooling air stream 14 is illustrated by arrows.

KURT LÖCHNER.
PETER KAPPUS.

PUBLISHED
MAY 11, 1943.
BY A. P. C.

K. LÖHNER ET AL
AIR CHARGE COOLING DEVICE
Filed Sept. 26, 1939

Serial No.
296,654

Fig. 1

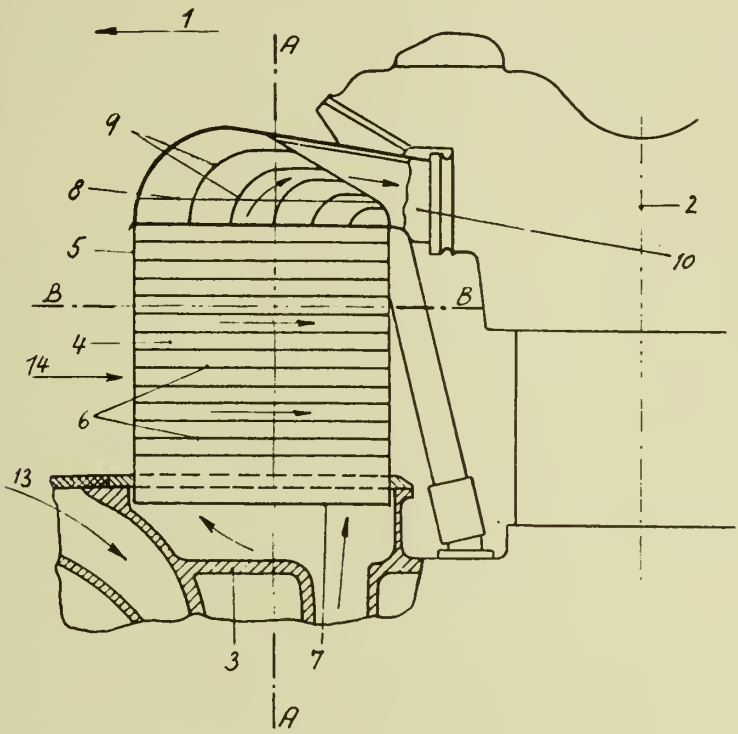

Fig. 2

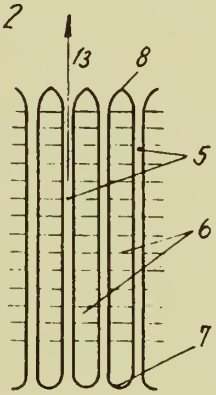

Fig. 3

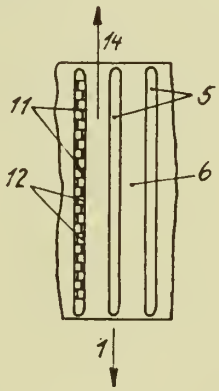

Kurt Löhner
Peter Kappus
Inventors
By A. A. Wicke
Attorneys

Published May 11, 1943

Serial No. 297,182

ALIEN PROPERTY CUSTODIAN

METHOD FOR MANUFACTURING BALLS FOR GAMES

Sylvain Lejeune, Paris, France; vested in the Alien Property Custodian

Application filed September 29, 1939

The present invention is a division of my copending application Ser. No. 250,617 filed on January 12, 1939.

My invention relates to balls for games, chiefly for tennis and to the method for manufacturing same.

Tennis balls are submitted to very strict conditions imposed by regulations which are in more or less distant relationship with the requirements of the game itself. The manufacturer has to give the ball a certain hardness through inflation; when the ball impinges on the racket, the initial velocity of the ball remains very high, but is immediately afterwards reduced by the braking action on the felt hairs of the coating, which action increases with the length of these hairs and reversely.

It will be noted that the ball does not remain the same throughout its existence as it lets out its air slowly and thus has a decreasing initial velocity. The felt hairs shorten and become less close by reason of the wear of the felt. The ball is thus progressively less energetically braked and bounces higher so that the initial conditions, viz: high initial velocity, braked speed in air and slow reception on the racket are transformed in an irregular manner. The two drawbacks constituted by the air let out of the ball and by the wear of the felt cover, render the life of the ball very short and irregular.

I may conclude in stating that the balls now in use do not assist a good player and do not allow the entire possible progress of tennis playing as regards rapidity and regularity of play.

The short life of the balls used to this day makes the game expensive whereas in contradistinction my improved ball has entirely different properties and advantages.

In the first place my improved ball cannot let its air out for the simple reason that it is not inflated.

This ball has a constant bounce which does not vary with the temperature. Its initial speed has a constant very high value which remains the same during the whole life of the ball. There is no damping effect noticeable upon impinging on the ground as in the case of felt so that the speed remains very high between the ground and the receiving racket. The bounce from ground to racket is thus a rapid and regular one as there is no wear of felt. The ball is easily visible by reason of its constant whiteness, the ball being washable. It is sensitive neither to cold, or heat, or dampness and remains therefore unaltered in any weather.

This ball is chiefly characterized by the fact that its cover is constituted by a textile impregnated throughout with rubber. This ensures a rigidity such that it is possible to do away on one hand with any outer textile coating for the ball and on the other with any inflating thereof. It may even be of advantage in certain cases to allow the inside of the finished ball to be in communication with the atmosphere through one or more perforations. Under such conditions there is established between the atmosphere and the inside of the ball an equilibrium of pressure and temperature which ensures remarkably constant bouncing properties for the ball.

The ball is provided on its outside with hollowed or relief parts which makes the speed and direction of motion more regular.

The method of manufacture consists primarily in impregnating a textile with an emulsion or solution of rubber, natural, synthetic or regenerated, completely or partly vulcanised or not vulcanised, and containing in the latter case the reagents required for vulcanization and preservation of the rubber, cutting in this impregnated textile suitably shaped parts and stamping same to form hemispherical segments after coagulation of the rubber through any suitable means. This stamping has for its effect to drive out part of the coagulation water and the hemispherical segments are thenafter dried and stuck together two by two. The ball is, if desired, covered with a coating constituted by a fabric welded through calendering to non vulcanised rubber and the whole is made fast through vulcanization.

The textile used may be constituted by vegetable or animal threads or fibres. It may be simple or multiple. Preferably the interweaving of the threads or fibres will be such that the textile is in equilibrium in all directions.

The impregnation is performed through any known means but in a manner such as will distribute uniformly and regularly the same weight of emulsion or dissolution over equal surfaces for a given thickness.

The coagulation is obtained through any known means and the hemispherical segments are cut out and stamped immediately after coagulation, i. e. when the rubber is incorporated with the fabric, but still bathing in its coagulation water. During the deformation due to stamping, part of this water is expelled but a certain amount remains in the fabric and is removed by drying.

During this drying process, there occurs of

necessity a deformation of the hemispherical segments. For this reason, as the manufacture of tennis balls must be very precise, the drying is performed on a hemispheric support having exactly the shape and size required for the segment. It is of advantage during the drying to hold the edge of the segment on the support, for instance by means of a ring urged downwards, so as to ensure perfect adherence between the segment and the support and to avoid any irregular shrinking.

The welding of two segments through their edges is performed for instance by means of a solution of non vulcanised rubber.

Preferably I apply then on the seam a band of fabric welded through calendering to non vulcanized rubber and on each hemispherical segment a circular element of the same fabric also welded through calendering to non vulcanized rubber, so as to form a complete coat round the ball. The whole is then vulcanized inside a mould which may be smooth or else provided with suitable asperities so as to give the outer surface of the ball the rugosity required for reducing or increasing its speed in air.

It is of advantage during this vulcanisation inside an autoclave to provide a communication between the inside of the ball and the outside of the mould whereby the pressure of the steam entering the ball ensures a better application of the wall or cover of the ball against the inner wall of the mould together with a much more speedy vulcanisation. This also avoids any contact of air with the wall of the ball during vulcanization, air being as well known a detrimental agent for vulcanization.

A considerable advantage of my improved ball consists in that it is possible to suitably adjust the rigidity of the cover by suitably measuring the proportion of textile material, rubber and charge or vulcanizing elements absorbed, with a view to producing perfectly standardized balls as concerns their initial velocity and height of bounce. It is thus possible for instance to produce a whole series of balls to be used by different players according to their experience and skill.

By way of example it may be stated that for obtaining a hardness comparable to that of the balls used to this day, there may be used a textile material weighing 435 grs. per sq. m. impregnated with a latex bath the concentration of which is 58%, the wringing out of the water being obtained in a regular manner by a roller weighing 1 Kg. travelling over a 10 cm. wide strip. The superposition of two plies provides the desired hardness.

Appended drawings show diagrammatically by way of example different stages of the method of manufacturing the ball.

Figs. 1 and 2 are cross-sectional views of the device used for stamping the hemispherical segments for two successive positions thereof.

Fig. 3 is a cross-sectional view of the drying means.

Fig. 4 is a cross-sectional view of the ball at the moment of the application of the reinforcing belt.

Fig. 5 shows, in plan view, a portion of this reinforcing belt.

Fig. 6 is a plan view of one of the reinforcing circle shaped parts.

Fig. 7 is a cross-section of the vulcanizing mould during vulcanization of the ball.

After the textile has been impregnated throughout with an emulsion or a solution of rubber, natural, synthetic or regenerated, containing the reagents necessary for its vulcanization and preservation, the coagulation is provided by any suitable means. A circular part **1** (Fig. 1) is then punched out of the material and placed on a stamping machine including a female mould **2** and a male stamping part **3**. The mould **2** is provided with channels **8** for removal of the water.

The stamping being performed (Fig. 2), a hemispherical segment **4** is obtained with a flange **5**. This segment is then transferred on to a drying mould or support **6** (Fig. 3) the shapt and size of which are exactly those desired for the finished segment. Round the mould and over the flange **5** is then arranged a ring **7** the weight of which is such that it is urged downwards and holds the flange of the segment well applied against the mould. The segment finishes drying on the latter after which the periphery thereof is cut to its final shape.

Two finished segments **4** and **4'** are then immersed entirely, for instance by suspending them through a suitable hook, in a rubber solution after which they are dried and applied one against the other as shown in Fig. 4. A band of fabric constituted for instance by a ribbon of canvas **10** welded by calendering to a sheet **11** of non vulcanised rubber is then used. This band has the length required for forming a belt round the ball, the two ends overlapping slightly one another and being cut if desired along a bevel so as not to form any supplementary thickness. The band considered is applied over the joint between the two segments **4—4'**. I then apply over the segments themselves two circular parts **10** of the same material as the band **3** i. e. formed of canvas or other fabric welded through calendering to a sheet of non vulcanized rubber. The size of the circular parts **12** is chosen in a manner such that after application over the hemispherical segments their edges overlap slightly the corresponding edges of the band **11**.

The ball thus formed is then carried inside the vulcanizing mould (Fig. 7). This mould comprises two halves **15—16** connected through a hinge **17** and held securely together by the bolt **18**. A hollow needle **19** passes into the inside of the mould which communicates thus with the inside of the autoclave used for heating the mould and ball inside same. The hollow needle is protected at the point where it passes inside the mould by a metal bushing **21** fitted over said needle. The mould is provided with projections **22** and/or recesses **23** arranged in accordance with a predetermined pattern.

After opening the mould the ball ready for vulcanization is arranged in the half-mould **16** and pushed into its housing, its cover being thus transfixed by the needle **19**. The mould being then closed, the bolt **18** is drawn in and the mould carried into a steam-heated autoclave for vulcanizing the ball. The vulcanization being performed, the ball is removed and there is introduced inside the opening left by the bushing **21** a stopping part provided with a calibrated hole which allows the reduction to the desired cross-sectional area of the passage allowed for the air through the cover of the ball.

If required and/or desired the channel left open by the bushing and needle in the cover may be entirely closed.

SYLVAIN LEJEUNE.

PUBLISHED
MAY 11, 1943.
BY A. F. C.

L. M. S. LEJEUNE
METHOD FOR MANUFACTURING BALLS FOR GAMES
Filed Sept. 29, 1939

Serial No.
297,182

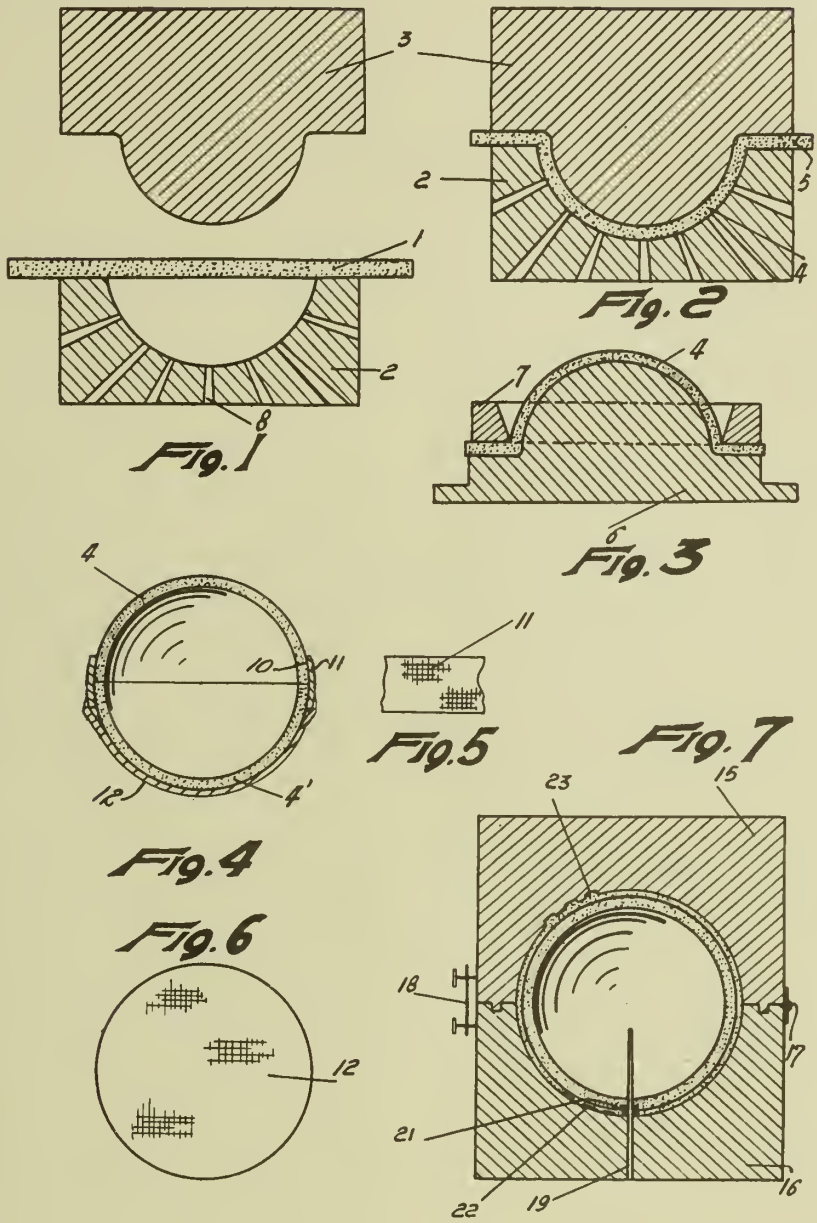

Inventor,
Leon Max Sylvain Lejeune

By: Glascock Downing & Seebold
Attys.

Published May 11, 1943

Serial No. 299,222

ALIEN PROPERTY CUSTODIAN

METHOD AND MEANS FOR AUTOMATIC BLANK CHAIN STITCHING

Otto Mohn, Stuttgart-S, and Willy Flügge, Oberndorf on the Neckar, Germany; vested in the Alien Property Custodian

Application filed October 12, 1939

The present invention relates to a method of automatic blank chain-stitching for chain stitch sewing machines of all kinds, that is to say for forming the thread chain during the period when there is no work under the sewing needle, for the purpose of ensuring uninterrupted continuance of the thread chain formation between the individual pieces of work to be sewn.

In the case of overlap sewing machines it is known to use a movable looping finger for producing the automatic looping operation. However, said looping finger requires a separate drive and is also exposed to the risk of breakdowns.

In addition, measures are known which, in the case of single and double chain stitch sewing machines, produce the looping operation without additional auxiliaries, merely by giving the sewing tools a different shape. However, this remodelling of the sewing tools possesses the drawback that in certain circumstances the machine requires a resetting of the sewing tools when altering the length of stitch or when changing the thread.

The object of the present invention is to provide a simple method and means whereby the above mentioned drawbacks are obviated.

The looping operation is effected by arranging a stationary looping tongue between the stitch plate and the gripper and utilizing the available thread movement which is necessary for forming the seam. The thread movement resulting from the reciprocating horizontal movement of the gripper is preferably utilized to effect a looping on the said stationary tongue.

The said stationary looping tongue fulfills the same function as the known mechanically actuated looping finger. Owing to the peculiar shape and arrangement of the stationary looping tongue and also to the thread movement resulting from the return movement of the gripper, the portion of thread located between the needle thread loop which is suspended above the gripper, and the needle eye, comes within reach of the looping tongue. When the needle travels downwardly this section of the thread is suspended across the stationary looping tongue and remains there until the gripper has taken up the thread loop thrown out by the needle, i. e. until the thread chain link is tied. It is only during the further course of the stitch formation that said thread chain link is pulled off the stationary looping tongue owing to the thread movement due to the forward movement of the gripper and the forward feed movement of the thread chain. In this manner there is no need for the looping auxiliaries to carry out movements on their own.

Owing to this accurate tying of the thread chain link to the stationary looping tongue a more effective linking process is developed, which in this manner is independent of the shape and length of the stitch hole, the size of the movement of the fabric feeding motion and the nature of the thread.

For fabrics made of teaseled thread an additional curved guide is required for guiding the needle thread.

When using teaseled thread the looping tongue and the curved guide are preferably attached to and level with the stitch plate. It is, however, particularly advantageous to arrange the looping tongue and the curved guide level with the presser foot, so that they may also be attached to the latter. The above arrangement possesses the advantage in that the looping tongue also remains in action during the sewing process, so that in this manner, when the goods to be sewn are delicate, for example paper bags, there is no tearing due to rough thread at the points where the needle enters.

The method is applicable to all sewing machines having one or more needles and wherein the movement of the thread during the formation of the seam is suitable to produce a looping process by means of single or multiple use of a looping auxiliary.

In the accompanying drawings a constructional form according to the invention is illustrated by way of example as applied to a single needle, double chain-stitching sewing machine.

In these drawings:

Figure 1 illustrates in perspective a section through the stitch plate of a double chain-stitching machine showing the thread chain formation at the commencement of the downward movement of the needle:

Figure 2 is a view similar to Figure 1 but showing the needle in a position where it has almost completed its downward movement:

Figure 3 is a similar view showing the needle shortly before the commencement of its upward movement (the thread loops in Figures 1, 2 and 3 have been pulled apart for the sake of clarity):

Figure 4 is a plan view of the stitch plate:

Figure 5 is a view showing the underside of the stitch plate:

Figure 6 is an enlarged view of the underside of the stitch plate showing the stitch hole with the looping tongue:

Figure 7 is a longitudinal section through the stitch hole on the line A—B in Figure 4:

Figure 8 is a cross section through the stitch hole on the line C—D in Figure 4;

Figure 9 is a perspective view in section through a stitch plate and a presser foot of a double chain stitch sewing machine in particular when using fabric made of teaseled thread, the chain formation being shown at the commencement of the downward movement of the needle:

Figure 10 is a similar view showing the needle having almost completed its downward movement.

Figure 11 is a similar view showing the needle shortly before the commencement of its upward movement (the loops of the threads in Figures 9, 10 and 11 have been pulled apart for the sake of clearness), and

Figure 12 is a plan view of the presser foot.

On the underside of the stitchplate 1 (Figs. 4–7) the stationary looping tongue 2 is fixedly secured by means of a screw 3. The looping tongue 2 extends laterally of the needle 4 and ends in a hook-shaped point 2*a* behind the said needle. Between the point 2*a* and the underside 1*a* of the stitchplate there is provided a recessed portion 1*b* which is adapted to allow the thread to come to rest unhindered upon the looping tongue.

The looping process is carried out in the following manner:

When the needle 4 (Fig. 1) commences to move downwardly the gripper 5 is carrying out its return movement. This causes the needle thread loop 6*b* of the needle thread 6 which is suspended on the gripper 5 to be moved in the direction of movement of the gripper so as to come within reach of the point 2*a* of the looping tongue 2.

In the course of the continued downward movement of the needle 4 (Fig. 2) the thread portion 6*a* is consequently laid over the point 2*a* of the looping tongue 2, where it remains until, at the commencement of the upward movement of the needle 4 (Figure 3), the forwardly moving gripper 5 picks up the needle thread loop 7, thrown out behind the needle 4, and loops it together with the gripper thread loop 8, that is to say until the adjacent thread chain link has been tied.

In the further movement of the needle the thread chain link formed upon the looping tongue 2 is stripped from the tongue 2 owing to the forward movement of the gripper 5 and the forward feed movement of the thread chain 10, whereupon the thread picture seen in Figure 1 reappears.

The arrangement of the looping tongue and curved guide upon the presser foot is preferably adopted in the case of fabrics made from teaseled thread.

Upon the upper side of the presser foot 11 (Figs. 9–12) the looping tongue 2 is attached by means of screw 3. The looping tongue extends into the stitch hole 11*a* of the presser foot 11 to behind the needle 4, so that the hook-shaped point 2*a* of the looping tongue when seen in the direction of the forward feeding device, assumes a position substantially behind the centre of the needle.

A curved guide 12 is attached behind the looping tongue 2 to the presser foot by means of screw 13. Said guide lies across the stitch hole 11*a* of the presser foot 11 and possesses a curved portion 12*a* which is adapted to bring the thread portion 6*a* of the needle thread 6 within reach of the looping tongue 2, so long as the fabric feed motion 9 feeds forward the thread chain 10 resting on the stitch plate 1. The looping process in the case of teaseled thread fabric contains, in addition, the action of the curved guide for the needle thread.

When the needle 4 (Figure 9) commences to move downwardly the lower portion of the thread section 6*a* of the needle thread 6 is also pushed forward by means of the thread chain 10 which has been pushed forward by the fabric feed motion 9. During this operation the section of the thread 6*a* slides past the curved portion 12*a* of the curved guide 12 until it reaches the rear of the hook 2*a* of the looping tongue 2 and thus comes within reach of the said tongue.

In the course of the further downward movement of the needle 4 (Figure 10) the thread section 6*a* is consequently suspended over the hook 2*a* of the looping tongue 2, where it remains suspended until the next thread chain link is tied.

In the further course (Figure 11) the thread chain link formed upon the looping tongue 2 is pulled off therefrom owing to the forward feed movement of the thread chain 10, whereupon the thread picture seen in Figure 1 reappears.

OTTO MOHN.
WILLY FLÜGGE.

PUBLISHED

MAY 11, 1943.

BY A. P. C.

O. MOHN ET AL
METHOD AND MEANS FOR AUTOMATIC
BLANK CHAIN STITCHING
Filed Oct. 12, 1939

Serial No.
299,222

3 Sheets-Sheet 1

Fig.1

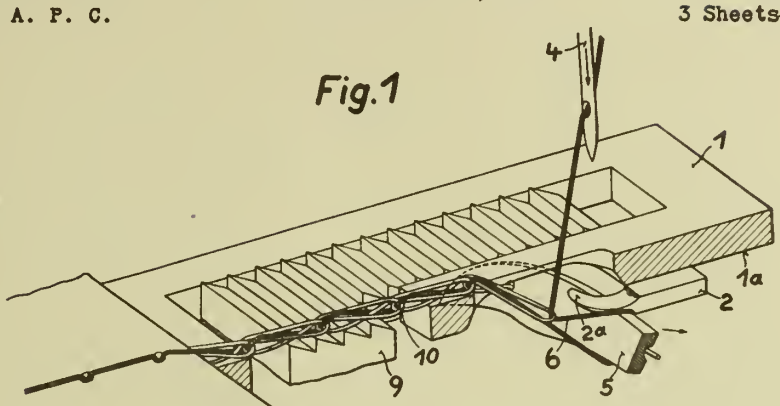

Fig.2

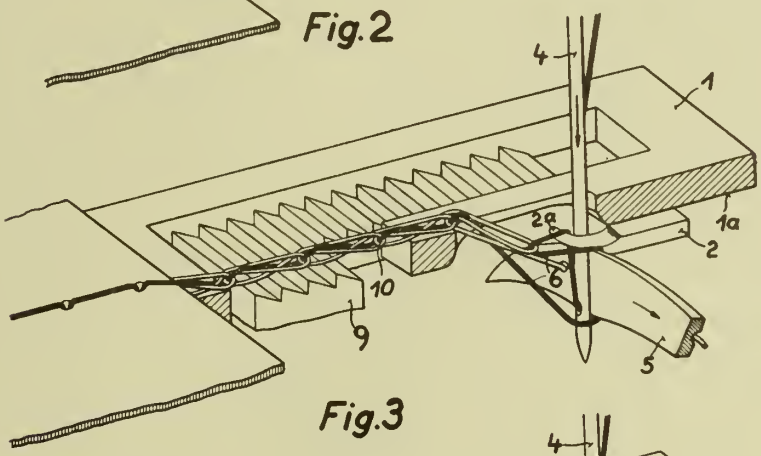

Fig.3

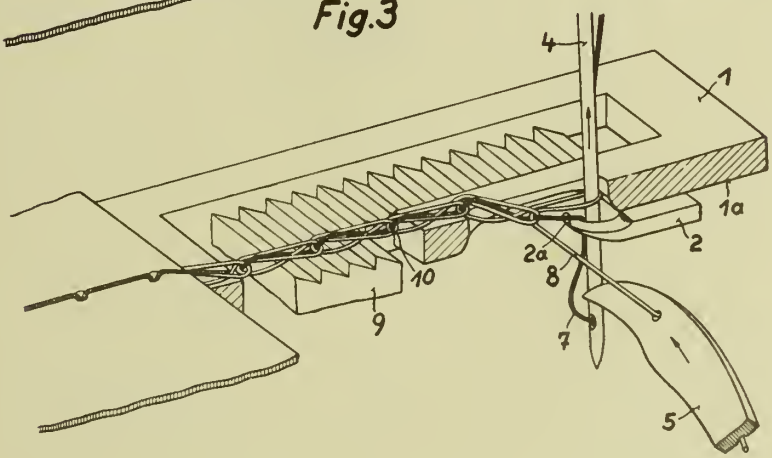

Inventors:
Otto Mohn and
Willy Flügge

By
Young, Emery & Thompson
Attorneys

PUBLISHED

MAY 11, 1943.

BY A. P. C.

O. MOHN ET AL
METHOD AND MEANS FOR AUTOMATIC
BLANK CHAIN STITCHING
Filed Oct. 12, 1939

Serial No.
299,222

3 Sheets-Sheet 2

Fig. 4

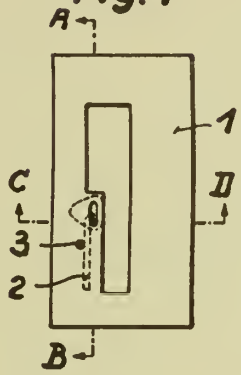

Fig. 5

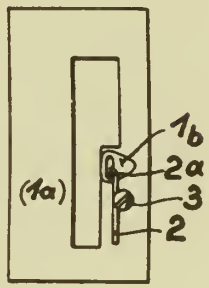

Fig. 6

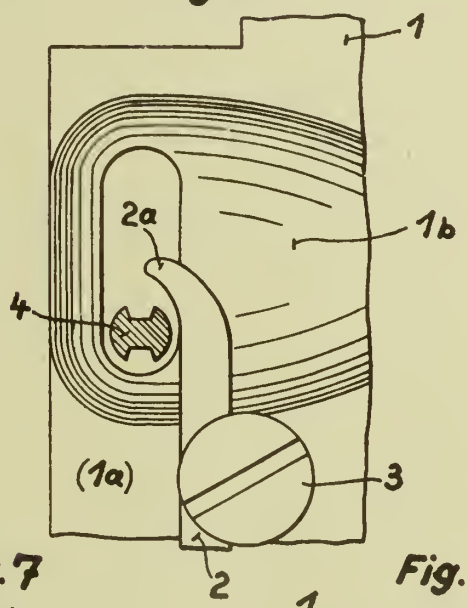

Fig. 7

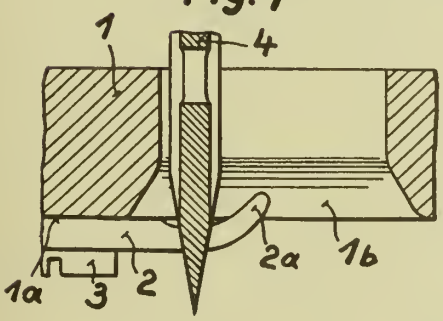

Fig. 8

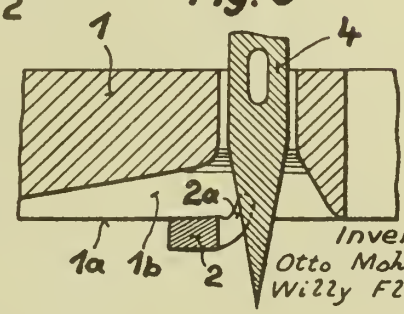

Inventors:
Otto Mohn and
Willy Flügge

By Young, Emery & Thompson
Attorneys

PUBLISHED

MAY 11, 1943.

BY A. P. C.

O. MOHN ET AL
METHOD AND MEANS FOR AUTOMATIC
BLANK CHAIN STITCHING
Filed Oct. 12, 1939

Serial No.
299,222

3 Sheets-Sheet 3

Fig. 9

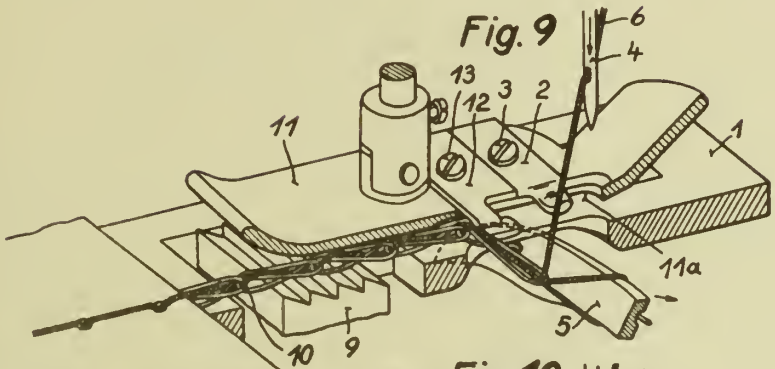

Fig. 10

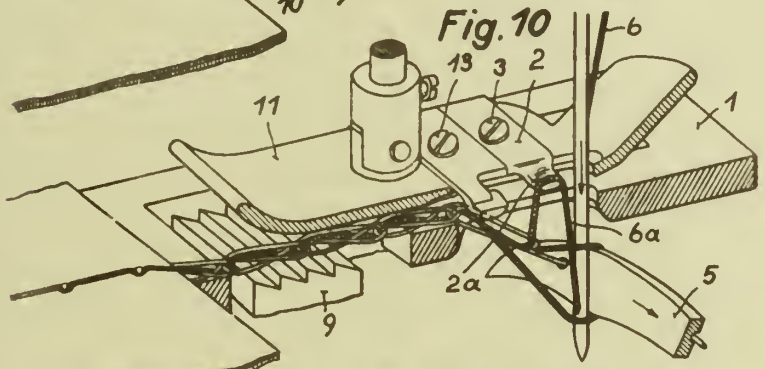

Fig. 11

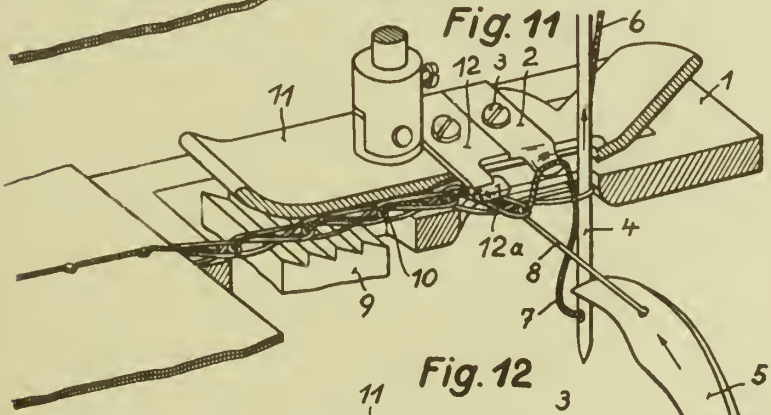

Fig. 12

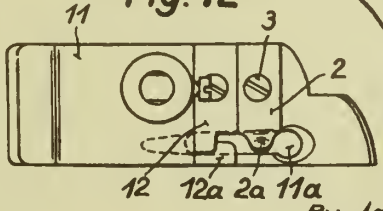

Inventors:
Otto Mohn and
Willy Flügge

By Young, Emery & Thompson
Attorneys

Published May 11, 1943

Serial No. 299,652

ALIEN PROPERTY CUSTODIAN

GEARING FOR AIRCRAFTS

Otto Nübling, Berlin-Frohnau, and Erich Wirthgen, Berlin-Reinickendorf-Ost, Germany; vested in the Alien Property Custodian

Application filed October 16, 1939

The present invention relates to a gearing which particularly is designed and adapted for aircrafts and is provided with means for changing the sense of rotation of the driving member, for instance the air propeller, and also with means for maintaining the sense of rotation of the auxiliary apparatus, as for instance the ignition device, the charger, the dynamo, the air compressor and so on. Preferably, an ordinary combustion engine is used as prime mover.

The present invention is not concerned with a so-called reversible internal combustion engine of usual construction, i. e. with an engine which during operation may be adjusted to a reversed direction of rotation by a simple manipulation by means of a lever system and so on. In contradistinction thereto, the invention is concerned with a gearing which without necessitating many additional parts and particular space- and weight-expenditure allows, preferably during stoppage of the motor, adjustment to the reversed direction of rotation in a simple manner, for instance in the workshop. As all means are provided on the motor itself, difficulties never may arise due to accessories not being at hand.

The gearing according to the invention is to serve various purposes. One of the purposes for instance is to provide particular favorable service conditions of motor for aircrafts having a plurality of motors.

In connection with aircrafts having a plurality of motors it is advantageous to build in motors having air propellers rotating clockwise and anti-clockwise. For this purpose it has been proposed to provide clockwise and anti-clockwise rotating gears for the air propellers and to build in these gears according to demand.

This proposal, however, did not lead to useful results, as for obtaining the two different directions of rotation two reducing gears are required for a motor rotating in a constant sense. If now reducing gears of different reducing ratios are used, the number of the individual parts of the gearings which already must be provided in duplicate and kept in stock for the flying service must be multiplied in accordance with the reducings required.

Moreover, in gearings in which the air propeller shaft rotates in a direction opposite to that of the crankshaft the drawback exists that the counter-moment acting upon the crank case is equal to the sum of the torsional moments or torques produced by the propeller on the one hand and by the crankshaft on the other hand. Due to this relatively large torsional moment or torque the crank case is extremely heavy stressed. Particularly expensive and complicated arrangements are required to obviate these stresses.

If, however, the reducing gear rotates in the same direction as the crankshaft and the air propeller shaft, then the difference of the torques produced by the air propeller shaft on the one hand and the crankshaft on the other hand only acts upon the crank case.

Now, it has been found that the gearing may in a particular simple manner be so constructed that for both directions of rotation of the air propellers such gearings only need be used in which the air propeller shaft and the crankshaft have the same direction of rotation and in which the auxiliary apparatus of the motor aggregate may maintain the same sense of rotation so that on reversal of the machine an exchange of these apparatus is not necessary.

All these requirements are fulfilled according to the invention by the fact that the members controlling the change of gas are, by very simple auxiliary means, reversed in accordance with the altered direction of rotation of the crankshaft at the stoppage of the motor, the driving means for the auxiliary apparatus being provided with reversible driving members which allow a constant sense of rotation of the drive of the apparatus.

Preferably, the cams exchanged against each other during the reversing operation are so arranged that during reversal the control rods of the cylinder valves of the engine associated to the cams are prevented from further cooperation with the one cam and caused to directly cooperate with the other cam.

For this purpose some of the cams provided for the opposite control operations are arranged on their shaft in axially staggered relation with regard to each other in such a manner that on changing the basic control position the shaft may first of all axially be displaced for the amount of the staggering and the distance of the cams from each other (smallest distance for reasons of manufacture), whereupon the shaft may be rotated about 180° and finally be shifted axially for the rest amount still possible.

The above described construction of the cams and the arrangement of the latter upon the control shaft for instance have the substantial advantage that special change-over surfaces between the individual cams are not required. Moreover, the very troublesome lifting of the valve tappets also is not required with the construction and arrangement of the cams according to the invention.

With regard to known devices for effecting reversal during operation, the actuation by means of levers, forks, sleeves, and associated lever systems is dispensed with according to the present invention and replaced by a simple guide bearing having a connecting flange arranged out of the middle. For the purpose of adjustment this element is removed and inserted again after having been turned about 180°.

In carrying out the invention into effect a twelve cylinder motor for instance is provided with two cam shafts journalled in the crank case. Each cam shaft carries a set of twelve cams for an anti-clockwise rotation and a set of twelve cams for a clockwise rotation six cams of each set of twelve cams serve for controlling the admission and the other six cams of each set of twelve cams are used for controlling the exhaust. The cam shafts for instance are guided in side bracket bearings. The flange of the bearing is arranged upon its hub outside the middle so that if the hub is reversely mounted, the cam shaft is guided in the correct longitudinal position for the other direction of rotation. An alteration of the basic control position, i. e. a reversal of the gearing is effected for instance by bringing the crankshaft of the cylinder I into the position at the upper dead centre. The cam shaft then occupies the position diagrammatically indicated in the well-known control diagram shown in Fig. 4.

Preferably, the cams mounted upon the upper half of the shaft are staggered with regard to the cams on the lower half of the shaft in the longitudinal axis for two millimeters multiplied by the distance the valve spindles are separated from each other in the longitudinal direction.

Therefore, the cam shaft may first of all be displaced towards the left for two millimeters multiplied by the smallest distance *c* of the cams from each other until some of the cams abut against the adjacent guides of the control rods of the valve. Another portion of the cams thereby is shifted for a certain amount, for instance for the distance *a*, over the coordinated control rods of the valve.

On rotation of the cam shaft for 180° those cams which are situated for the measure *a* above the coordinated control rods will lift the corresponding control rods. Then, the cam shaft may be shifted for instance towards the left for the amount of the rest of the path of displacement possible (see Fig. 3). The constructional details and the particular arrangements will be described later on.

Now, eventually the guide bearing of the cam shaft brought into the new basic control position is fixed. Furthermore, for instance the corresponding ignition cables of the magnet ignition device are exchanged. Then the reversible gearings for the means driving the auxiliary apparatus and connected to the cam shaft, for instance, by way of the crankshaft, are operated and reversed respectively. This change-over has the effect that for the new basic control position of the cam shaft also the sense of rotation of the driving means for the auxiliary apparatus remains unchanged and constant. The auxiliary apparatus, as for instance the charging device, the magneto ignition device, the dynamo or lighting machine, the air compressor, the lubricating pump, the fuel pump, the revolution indicator, eventually are screwed to a special casing and elastically driven by the crankshaft by means of a common driving wheel. Particularly, all auxiliary apparatus are, according to the present invention, brought into engagement with the main driving wheel by way of two intermediate wheels, the change of the sense of rotation of the main driving member, supplying the power in such a manner that the auxiliary apparatus always are driven in the same sense of rotation, being effected for instance by the fact that by oscillation the main driving wheel selectively is brought into engagement always with one of the intermediate driving wheels. Another possibility consists in this that the intermediate wheels are eccentrically journalled and are selectively swung towards the fixed main driving wheel. Preferably, the eccentric bolts of the intermediate wheels are so arranged that they may be turned from the outside. This has the substantial advantage and is a great advantage of the present invention that the motor during adjustment of the cams need not be dismantled.

A further possibility consists in fixing upon the cam shaft two bevel gear wheels the points of the cones of which are staggered about the way of displacement of the cam shaft in the longitudinal axis, another bevel gear wheel being provided which on displacement of the cam shaft selectively engages the one or the other bevel gear wheel. The third bevel gear wheel not mounted upon the cam shaft is used for driving an auxiliary apparatus.

A particular simple arrangement for obtaining the constant sense of rotation of the auxiliary apparatus consists, according to the present invention, in providing a screw or the like of definite length which may be exchanged against a screw of other length and whereby the exchange alters the position of the main driving gear and thereby effects a reversal of the sense of rotation of the auxiliary apparatus.

Preferably, an elastically acting member is inserted, according to the present invention, in the system of power transmission from a main driving wheel or the like to the driving members of the auxiliary apparatus. Preferably, a torsion rod, a rod-like torsional spring or the like is used for this purpose one end of which is inserted in a bore of the crankshaft and the other end in a bore of a pinion.

The gearing according to the present invention has various advantages. The individual auxiliary apparatus need not as hitherto be combined to a block to allow reversal whereby the block as a whole had to be exchanged against another block.

The gearing according to the invention, moreover, has the advantage of being provided with all parts required for the various basic control positions (clockwise- and anti-clockwise rotation). The reversal itself, i. e. the change of the basic control position for instance from clockwise rotation to anti-clockwise rotation may be effected in the shortest time and eventually also at any desired place. The basic control position may be made discernible by providing signs on the outside of the reversing members in consideration, for instance, by applying a dye of a special color for each direction of rotation in such a manner that persons not familiar with the arrangement may be able to at once ascertain the direction of rotation adjusted.

Other features of the invention will be explained in the following description of the various constructions.

In the accompanying drawings some embodi-

ments of the invention are shown by way of example.

In these drawings:

Fig. 1 is a side elevation of a twelve cylinder motor, for instance of an aero-motor, partially in section,

Fig. 2 is a rear view of the construction illustrated in Fig. 1 diagrammatically showing some particular important members,

Fig. 3 is an elevation on enlarged scale of a portion of a cam shaft having four control cams for each of the two control rods or tappets of the valve of a cylinder,

Fig. 4 shows a well-known control diagram representing diagrammatically the various admission and exhaust positions of the different cams.

Fig. 5 is an end view of the construction illustrated in Fig. 3 showing the positions of the various cams,

Fig. 6 illustrates another modification substantially in section on line VI—VI of Fig. 7 in which an oscillatable stepped gear wheel is provided allowing to always drive the auxiliary apparatus of the gearing in the same sense,

Fig. 7 is a section on line VII—VII of Fig. 6 the section being taken through the main parts only,

Fig. 8 shows another modification of the construction illustrated in Figs. 1, 2 and 6, 7; according to this modification a fixed main driving wheel and two selectively swingable intermediate drive wheels are provided which by their oscillation allow the auxiliary apparatus of the gearing to effect driving in the same sense of rotation,

Fig. 9 is a section of a detail of the construction illustrated in Fig. 8,

Figs. 10 and 11 show another modification. Fig. 10 representing the reversible gearing in the one position and Fig. 11 shows the same gearing in the other position, the reversal in this construction being possible due to the fact that a pinion may axially be displaced and alternately be brought into engagement with further different driving wheels, and

Fig. 12 shows a section through a still other construction of the reversible gear for the auxiliary apparatus.

The construction shown in Figs. 1 and 2 is particularly adapted for the drive of some individual auxiliary apparatus, i. e. particularly of the lubricating pump and the fuel pump the driving power for these apparatus being derived from the cam shaft.

The crankshaft case is designated with 1. 2 are the motor cylinders set at an angle to the crankshaft in V-fashion. 3 is one of the shafts provided with cams. The shaft 3 is journalled at 4 in a journal bearing. Another journal bearing arranged at the end face of the crank case is provided with a bushing 5. The end of the cam shaft extending outwardly at this point is designated 6 and provided with a thread upon which a nut 7, for instance a hexagon nut, is screwed. The bushing 5 is arranged in the interior of the bearing body 8 which is reversibly arranged in the crank case in such a manner that the bearing body together with the bushing may be brought axially into another position and be fixed in this position in the longitudinal direction. One of the axial positions is shown in Fig. 1. In this position one of the bevel wheels described in detail later on engages into the bevel wheel 23 driving the associated auxiliary apparatus. In the other axial position of the bearing 8 the other of the two bevel wheels engages the just mentioned driving bevel wheel 23.

Four cams of the shaft 3 are designated 9, 10, 11 and 12. The two cams 9 and 10 form a group and alternately cooperate with the control rod or tappet 13, for instance of an admission valve of the cylinder 2. The control rod 13 is in its axial direction displaceably mounted in a guide 14.

The two cams 11 and 12 also form a group. Each of these cams alternately cooperates with the control rod or tappet 15 which, for instance controls the exhaust valve of the cylinder 2 of the internal combustion engine. The control rod 15 is mounted in an axial guide 16.

In the direction looking from the cams towards the bearing 5, 8 the cam shaft 3 has a part 17 provided with wedge grooves or the like into which engage wedges by means of which driving wheels rotate the cam shaft, the wheels 18 being journalled in the crank case by means of a side bracket bearing 250. In all positions of the crankshaft 3 the spur gear wheel 18 mounted in this manner maintains its position with regard to the crank case 1. The wheel 18 serves as driving wheel for the cam shaft and always engages a corresponding gear wheel mounted upon the crankshaft of the internal combustion engine. Consequently, during rotation of the crankshaft the cam shaft also is rotated. Hereby the power is transmitted to the cam shaft by way of the driving wheel 18 and the wedge.

Adjacent the driving wheel 18 and in the direction towards the bearing 5 a sleeve-like body 19 is so connected to the cam shaft 3 as to be capable of axial displacement. The ends of the sleeve-like body 19 carry bevel wheels 20 and 21 respectively the teeth of which face each other.

The two bevel wheels 20 and 21 may alternately be brought into engagement with another bevel wheel 23 fixed upon a shaft 24. In a manner not shown in the drawings the shaft 24 is connected to the driving mechanism of the auxiliary apparatus, particularly the lubricating pump and the fuel pump. The bevel wheel 23 as well as the shaft 24 are journalled in the casing portion 25 of the internal combustion engine.

26 in Fig. 2 designates a driving wheel fixed upon the crank-shaft of the internal combustion engine and engaging another driving wheel 27 rotatably mounted upon the shaft 28. Rotatably mounted upon the latter is another driving wheel 29 rigidly connected to the driving wheel 27. The driving wheel 29 engages with the already mentioned driving wheel 18 which is connected to the part 17 of the cam shaft 3 by means of keys.

The driving wheel 26 mounted upon the crankshaft also engages a driving wheel 30 rotatably mounted upon an axis 31. Also rotatably mounted upon the latter is a driving wheel 32 rigidly connected to the driving wheel 30 and engaging another driving wheel 33 which corresponds to the already mentioned driving wheel 18 and is arranged upon a cam shaft 34 which as cam shaft belongs to the other group of cylinder rows arranged in V-fashion. 35 designates the driving shaft for an auxiliary apparatus corresponding to the driving shaft 24. One of these auxiliary apparatus, for instance the oil pump, is designated 36 and another auxiliary apparatus, for instance the fuel pump, is designated 37. The driving wheel 23 drives the pump 36 and the driving member 35 drives the pump 36.

In Fig. 3 the cam shaft is designated **38**, the illustrated broken away portion of which carries eight cams **39**, **40**, **41**, **42**, **43**, **44**, **45** and **46**. Any two of these cams form a group for alternately actuating a coordinated valve tappet for a cylinder of the internal combustion engine. So, for instance, a group is formed by the cams **39**, **40**, another group by the cams **41**, **42**, another group by the cams **43**, **44** and still another group by the cams **45**, **46**. The cams **39** and **40** cooperate with the tappet **47**, the cams **41**, **42** with the tappet **48**, the cams **43**, **44** with the tappet **49** and the cams **45**, **46** with the tappet **50**.

The cams **39** and **40** are arranged in an axially spaced relation from each other for the distance *b*. The cams **41** and **42** are spaced from each other for the axial distance *c*. The vertical projection of the cam **42** overlaps the tappet **48** about the distance *a*.

The control surfaces projecting furthest outwardly of the cams **39**, **42**, **44** and **45** are directed upwardly, whereas the control surfaces projecting furthest outwardly of the other cams **40**, **41**, **43** and **46** are directed downwardly. In the left hand group of cams **39**, **40**, **41** and **42** controlling the valve tappets of the cylinder **4** of the internal combustion engine the two outer cams **39** and **42** are directed upwardly, whereas the two inner cams **40** and **41** are directed downwardly.

In the group of cams **43**, **44**, **45**, **46** serving to actuate the valve tappets, for instance of the cylinder **5** of the internal combustion engine, the two outer cams **43** and **46** are directed downwardly, whereas the two inner cams **44** and **45** are directed upwardly.

Whereas with the tappets of the cylinder **4** the tappet **47** arranged at the left hand side occupies the upper position, the corresponding tappet **49** of the cylinder **5** occupies its lower position. The tappet **48** of the cylinder **4** arranged at the right hand side, however, occupies its lower position, whereas the corresponding tappet **50** of the cylinder **5** occupies its upper position.

The various tappets and their positions partly may be seen from the end view shown in Fig. 5 and particularly from the control diagram shown in Fig. 4. Here also the following designations have been used. The capital letters E and A designate the admission and exhaust respectively. The Roman figures designate for instance a basic control position, the Arabic figures then designate the other basic control position. Furthermore, the Figures 1–6 and I–VI respectively designate the various cylinders of the internal combustion engine. The ignition is for instance effected in the succession **1**, **5**, **3**, **6**, **2**, **4** for the rotation in the clockwise direction and **1**, **4**, **2**, **6**, **3**, **5** for the rotation in the anti-clockwise direction.

Reversal of the internal combustion engine **1**, **2** may for instance be effected as follows: The engine is stopped, whereupon the cam shaft is shifted towards the left about 2 mm and the measure c until some of the cams abut against adjacent tappets. Another portion of the cams thereby is moved about the distance *a* over the coordinated valve tappets. Thereupon, the cam shaft is rotated about 180°, whereby such cams overlapping the coordinated valve tappets for the distance *a* are caused to lift these tappets. After rotation round 180° has been effected, the cam shaft may be shifted further towards the left for the rest amount of the still possible way of displacement.

Before carrying out these operations the bevel gear **20** had been in engagement with the bevel gear **23**. After carrying out these operations and after the shifting of the cam shaft towards the left has been effected, the bevel gear **20** no longer engages the bevel wheel **23**, but now the bevel wheel **21** is in engagement with the bevel wheel **23**.

After the displacement of the control shaft towards the left has been terminated, the reversible bearing **5**, **8** is fixed and thereby the new operative position of the cam shaft is warranted. Two other cams now cooperate with the tappets of the admission and the exhaust respectively. Consequently, the internal combustion engine is, according to the arrangement and construction of the cams shown in Figs. 3, 4, and 5, reversed in such a manner that the crankshaft now rotates in opposite direction to that in which it was rotated before the reversal of the cam shaft was effected. The direction of rotation for the auxiliary apparatus, however, is the same as before, because the change gearing **20**, **21**, **23** has also been reversed during displacement of the cam shaft.

In the modification shown in Figs. 6 and 7 the crank case of the internal combustion engine is designated **51**. The cylinders shown partially in front elevation only are designated **52** and the geometrical axis of the crankshaft is designated **53**. Round the axis **53** a main driving gear **54** is rotatably arranged which, however, is neither displaceable nor swingable with the wheel **54** provided with an internal toothed rim **80** the wheel **55** cooperates in various positions. The wheel **55** is swingably journalled in such a manner that in any position of oscillation it always is brought into engagement with the surrounding wheel **54**. The wheel **55** is formed as a spur gear wheel and fixed upon a sleeve or the like upon which also is fixed another spur gear wheel **56** provided with an external toothed rim. This other gear wheel **56** therefore may be swung in the same manner as the gear wheel **55** the swinging being positively effected together with the swinging of the wheel **55**. According to the position into which it has been swung, the gear wheel **56** either engages a spur gear wheel **57** or another spur gear wheel **61**. The two gear wheels **57** and **61** are in engagement with each other.

If the gear wheel **56** engages the gear wheel **57**, the latter receives a definite rotation. This rotation is transmitted in the same or opposite sense but in a quite definite manner to all the spur gear wheels **61–72** connected to the wheel **57**.

Reversed direction of rotation of each individual spur gear wheel connected results if the swingable gear wheel **56** engages the gear wheel **61** as this latter engages the gear wheel **57** and any two gear wheels engaging each other rotate, as is well-known, in opposite directions. The gear wheel **61** is connected by way of the pinion **62** with the driving wheel **63** for the dynamo or lighting machine. Moreover, the pinion **62** engages the gear wheel **64** upon the shaft of which another gear wheel **65** is fixed which engages a gear wheel **66**. The latter drives a spur gear wheel **67** serving to drive the magneto ignition device. The already mentioned spur gear wheel **64** also drives a spur gear wheel **69** for the air compressor by way of the spur gear wheel **68**. From the latter the driving power for a gear wheel **70** is derived which directly engages the wheel **68**. The wheel **70** is in engagement with another spur gear wheel **71** which drives a gear wheel **72** for actuating the lubricant pump.

By way of the spur gear wheels **58** and the gear wheel **59** mounted on the shaft carrying the gear

wheels 58 the gear wheel 57 drives another spur gear wheel 60 by means of which the charger of the internal combustion engine is actuated.

In the construction shown in Fig. 7 the crank pin of the crankshaft of the internal combustion engine is designated 73. Connected to the one cheek or side wall of this crank pin 73 is a hollow pin 74 journalled in a slide bearing 75. Inserted into the recess of the pin 74 is a sleeve 76 which may for instance be fixed by friction, and at the inner surface of which are provided teeth, serrations or the like 83 into which engage corresponding teeth, ribs or the like of a torsional spring 82. The ribs of the torsional spring 82 engaging the grooves of the sleeve 76 warrant the elastic transmission of the torque from the crankshaft 73 to the connected gearing elements. A large portion of the length of the torsional spring 82 is surrounded by a sleeve 77 carrying various gearing elements and which may be rotated in a definite manner about the longitudinal axis. The sleeve 77 is provided with a projection which is journalled in the bearing 78. The latter may for instance be carried by the crankshaft case 79. The portion of the sleeve 77 supported by the bearing 78 is continued as a bushing 54 surrounding the sleeve 77. This bushing 54 is provided with the already mentioned internal toothed rim 80. Between the outer wall of the sleeve 77 and the inner wall of the crankshaft rib-like supporting members 251 for the sleeve 77 may be arranged with sufficient play so that stops of the rib-like supporting members 251 prevent overloading of the torsional spring, for instance during starting. The end of the rod 82 not cooperating with the crankshaft 73 is provided with a piston-like enlargement having externally axially arranged ribs, teeth or the like 84. The latter engage corresponding grooves or teeth of the portion 85 of the sleeve 77 protruding from the crankshaft casing. The portion 85 bears by way of a ball bearing 86 against a sleeve 87 which is journalled in the wall of the crank-shaft casing, a flange 88 of the sleeve 87 bearing against the outer wall of the crankshaft casing and being held by means of a cap screw 89. This screw simultaneously also holds a disc 90 or the like provided with a centre bore.

The outwardly directed end face of the portion 85 of the sleeve 77 is provided with a flange to which a flange disc 91 is fixed for instance by means of screw bolts. The disc 91 has a recess 92 in its middle portion into which a pin (not shown in the drawing) of a starting crank or handle for the crankshaft of the internal combustion engine may engage. The walls of this recess 92 are in a manner known per se provided with further inclined recesses or notches which allow that during rotation in one direction the starting crank or handle is coupled to the part to be actuated, but is disengaged as soon as rotation in opposite direction is effected. This has the advantage that on starting of the machine return shocks of the crankshaft are not transferred upon the starting crank or handle.

The above mentioned sleeve 87 is made integral with the eccentric sleeve 93 and is connected to the crankshaft casing by means of a flange. The sleeve 93 freely surrounds the sleeve 77 in a spaced relation. Rotatably and swingably mounted upon the eccenter 93 is a body 94 carrying two spur gear wheels which are axially arranged side by side but have different diameters so that the two gear wheels form a step. The one of these gear wheels is designated 55 and has already been described in connection with the modification shown in Fig. 6. The other gear wheel designated 56 also has already been described in connection with the modification illustrated in Fig. 6.

According to the position into which the carrier body 94 has been swung the gear wheel 55 comes at different places into engagement with the toothed rim 80 driven by the crankshaft 73 by means of the spring rod 82. This toothed rim 80, therefore, rotates the toothed rim 55, whereby the body 94 of this portion and thereby also the toothed rim 56 is rotated. By rotating the sleeve 93, 87 about its longitudinal axis the carrier body 94 is lifted or lowered. Simultaneously the eccentrically arranged toothed rim 56 also is lifted or lowered and selectively brought into engagement either with the gear wheel 61 (see Fig. 6) or with the gear wheel 57 (see Figs. 6 and 7).

In the service position shown in Fig. 7 the toothed rim 56 engages the toothed rim 57 which in turn engages the toothed rim 58 the hub of which is rigidly connected to the hub of a further toothed rim 59. The latter engages a toothed rim 60 upon the shaft of which the body 95 carrying the vanes 96 of a charger is arranged in suspension. If the vanes 96 are rotated, air is drawn in by way of the socket 97 and is forced into the channel 98 annularly surrounding the vanes 96. The channel 98 is formed on the one hand by the crankshaft case of the internal combustion engine and on the other hand by a joined special casing 99 having a recess 100 by which access may be had to the clutch members 91, 92 of the starting crank or handle.

If due to a reversal of the cam shaft the direction of rotation of the crankshaft of the combustion engine is changed, then rotation of the sleeve 93 causes swinging of the eccenter provided at said sleeve so that the gear wheel 56 is brought into engagement with another spur gear wheel for instance from 57 to 61 disengaged from the wheel 57 and engaged with the wheel 61 or vice versa disengaged from the wheel 61 and engaged with the wheel 57. By this change of engagement the altered direction of rotation of the crankshaft is so changed for the auxiliary apparatus that these continue to rotate in the same sense of rotation.

If the motor is started with a centrifugal starter having a large starting torque it is preferable to cause the starter to directly act upon the crankshaft, i. e. by cutting out the torsional rod by way of the stops 251 after overcoming the play prevailing in the state of rest. In the modification shown in Figs. 6, 7, 8 and 9 it is preferable to exchange the starter and the starter jaws 91 when altering the direction of rotation of the crankshaft, whereas this is not required with the constructions shown in Figs. 10, 11 and 12.

In the construction shown in Fig. 8 the crank case of the internal combustion engine is designated 101. The two cylinder rows are designated 102 and 103 respectively and the casing of the charger is designated 104. The charger is provided with two spirally arranged channels which are connected to the casing proper of the rotating vanes.

Of the various spur gear wheels diagrammatically shown in Fig. 8 two pinions the axes of rotation of which are swingable are designated 105 and 107 respectively. The pinion 105 is mounted for instance upon an eccentrically arranged carrier 108 as shown in Fig. 9. The latter is by means of a cylindrical pin 120 rotatably supported in the casing portion 123 of the crank-

shaft case 101. On the other side the eccentric bolt 108 carries a disc 106 about in the shape of a parallelogram provided with two diametrically arranged bores through which extend screw bolts 121. The thread of the bolts 121 is screwed into the female thread of the wall 122 of the crankshaft case 101. The axes of the screw bolts 121 are both arranged in the same distance from the center axis of the pivoted pin 120 of the carrier body 108. The pinion 105 may for instance be swung by loosening the two screws 121, gripping the disc 106 of the carrier body 108 and turning same round 180°, whereby the eccentric portion of the carrier bolt 108 for instance is swung upwardly (see Fig. 9). Then the screw bolts are again inserted into the holes of the disc 106 and screwed into the female thread of the bearing portion 122.

The pinion 107 is correspondingly journalled. The swingable disc of the eccentric bearing pin for this pinion 107 is designated 106*a*.

Depending on the position into which the pinion 105 has been swung, the latter engages the main pinion 104, the pinion 107, engaging the pinion 105, thereby maintains its position and is prevented from engaging the pinion 104.

If now the main pinion 104 which for instance is mounted upon the crankshaft and rotates with the latter in the same sense is rotated in another direction, then reversal must be effected in such a manner that the drives of the auxiliary apparatus continue to rotate in the same direction of rotation in spite of the other direction of rotation of the crankshaft. For this purpose during reversal the pinion 105 is brought out of engagement with the pinion 104. The pinion 107, however, is so swung that it engages the pinion 104 and simultaneously remains in engagement with the pinion 105. Consequently, the opposite sense of rotation of the crankshaft is so changed that all driving wheels connected thereto continue to rotate in their previous sense of rotation.

The pinion 107 engages a pinion 109 upon the axis of which another pinion 110 is fixed engaging a pinion 111 fixed upon the axis of the charger 104*a* which latter is driven thereby.

The pinion 105 engages a pinion 112 in turn engaging another pinion 113. The latter engages a pinion 114 upon the shaft of which a pinion 115 is fixed. The pinion 114 rotates a pinion 116. The pinion 115 drives a pinion 117 engaging another pinion 118 which finally engages a pinion 119.

Some of the pinions mentioned serve for instance for operating the lighting machine or dynamo, the air compressor, the magneto ignition device, the pumps and so on.

Eventually, the eccentric pin of the swingable pinions may be rotated by means of a worm actuated from the exterior.

In the construction shown in Figs. 10 and 11 a portion of the wall of the crankshaft case is designated 124. The crankshaft 125 is journalled in the slide bearing 126 and is provided with a sleeve 127 connected to one of the cheeks of the crank and facing towards the gearing driven by the crankshaft. This sleeve 127 is journalled in a slide bearing 128. In the sleeve-like portion of the shaft another sleeve 129 is provided which by means of a fitting pin 130 or the like is connected to the crankshaft in a manner to be rotated with the latter. The interior of the sleeve 129 is provided with axially extending ribs, teeth or the like into which engage correspondingly shaped teeth or grooves 131 of a rod 132 acting as torsional spring. The other end of the rod 132 also is provided with axially extending grooves, teeth or the like engaging in corresponding grooves or teeth of the sleeve 134. This sleeve partially surrounds the rod 132 in spaced relation. The side of the sleeve 134 facing the crankshaft is provided with a sleeve-like projection 135 having at 136 teeth projecting to the exterior which engage axial grooves or the like of the sleeve 129 and serve the purpose of transmitting the power from the crankshaft upon the sleeve 135. Projecting from the sleeve 134, 135 is a carrier body 137 of a spur gear rim 138. The carrier body 137 and the sleeve 134, 135 are made integral. Adjacent the carrier body 137 a wall 139 is provided which serves as a bearing. In this wall 139 the sleeve 135 is rotatably and shiftably arranged by means of a slide bearing bushing 140.

The wall 139 carries another bearing bushing 141 in which a bolt 142 is rotatably journalled carying a hub 143 forming one piece with two gear wheels 144 and 145. The gear wheel 144 is smaller than the gear wheel 145 and in the position of the gearing shown in Fig. 10 engages with the toothed rim 138 of the carrier body 137.

The bolt 142, moreover, is journalled in a bearing bushing 146 resting in a recess 147 of the wall 124 of the crankshaft case.

The spur gear wheel 145 engages with a further spur gear wheel 148 fixed upon the shaft 149 which is rotatably journalled in a slide bearing 150.

The bolt 149 is provided with a projection 151 upon which a carrier body 152 for vanes 153 is mounted in suspension. The carrier body 152 together with the vanes 153 is prevented from performing undesired axial displacements by means of a shoulder 154 of the bolt 149. By way of a socket 154*a* air, for instance, may be sucked in by means of the charger 151—154 which air then is pressed into a channel 155. The latter on the one hand is formed by a recess of the casing wall 124 and on the other hand by a casing 156. The latter has an opening 157 through which a handle or starting crank for starting the crankshaft may be inserted.

Upon the above mentioned bolt 142 a further gear wheel 150 is fixed the hub of which preferably is made integral with the hubs of the gear wheels 143 and 145. Another gear wheel 159 is fixed upon a sleeve-like hub 160. The latter surrounds the sleeve 134 mentioned above and is provided with jaws or claws 161 or the like directed inwardly which may be coupled with correspondingly shaped claws 162. These claws are arranged upon the sleeve 134 and project outwardly. By axially shifting the sleeve 134 the claws 162 and 161 may be engaged and disengaged respectively. Moreover, the gear wheel 137, 138 may be disengaged from the gear wheel 144, 143 by an axial displacement of the sleeve 134.

In the construction shown in Fig. 10 the gear wheel 138 engages the gear wheel 144, whereas the claws 162, 161 are out of engagement. In the construction shown in Fig. 11 the gear wheel 138 is out of engagement with the gear wheel 144, whereas the claws 162 and 161 are coupled together.

Into the casing 156 another sleeve body 163 projects forming a continuation of the sleeve 160. The sleeve body 160, 163 is journalled in the wall 124 of the crankshaft case. To this purpose bearing bushings 164 and 165 are provided be-

tween the sleeve body 160, 163 and the wall 124. The bearing bushing 164 is directed towards the inner walls of the casing 124, whereas the bearing bushing 165 is directed towards the outer wall of the casing 124 facing the space surrounded by the casing 156. The end of the portion 163 of the sleeve 160 projecting outwardly carries an outer thread upon which is screwed a nut 166 by means of which the sleeve 160, 163 may axially be fixed in position.

The front end of the portion 163 of the sleeve 160 is provided with a recess 167 into which the handle or starting crank may engage. The recess 167 is provided with other recesses not shown in the drawings which serve the same purpose as the corresponding recesses in the modification shown in Fig. 7, i. e. the purpose of allowing coupling of the handle or starting crank with the sleeve 163 during rotation in one direction only, whereas on rotation in the opposite direction the crank or handle is disengaged or released.

In the recess 167 a screw bolt 168 is arranged having a hexagon head 169 or the like. The end of the bolt 168 carrying the thread 170 is screwed into the above mentioned head 133 of the spring rod 132 less deep in the position shown in Fig. 10 and deeper in the position shown in Fig. 11. By means of this screw connection the rod 132 and the sleeve 135 coupled thereto together with the gear wheel 137, 138 and the coupling claw 162 may axially be shifted on rotation of the bolt 168, 169, 170.

For instance, after rotation of the bolt 168, 169, 170 the rod 132 together with the sleeve 135 is shifted so far towards the right until a limitation of the movement is effected by striking against a fixed portion, whereupon the position shown in Fig. 11 is obtained.

The outer periphery of the head 133 of the spring rod 132 is provided with grooves or ribs 171 which engage in corresponding ribs or grooves of the portion 172 of the sleeve 134 and thereby form a coupling for transmitting the torque. The power, therefore, is transmitted from the crankshaft 125 by way of the grooves and ribs of the portion 131 of the rod 132 upon the other head 133 of this rod. The grooves and ribs provided here transmit the power upon the portion 172 of the sleeve 134. From the latter the power is transmitted to the gear wheel 137, 138 and the coupling claw 162 respectively. Moreover, as soon as the resilient rod 132 is twisted to a definite degree, the sleeve 135 is coupled to the sleeve 129 by means of its outer projections 136. This coupling of the projections 136 has the advantage that on starting the twistable rod 132 is not damaged or destroyed by the return shock. The stops 136 have so much tangential play that the crankshaft during normal operation may freely swing, i. e. may transmit its power by way of the resilient rod.

The portion 172 of the sleeve 134 bears against the sleeve 160 by way of a roller bearing 173. Moreover, the front end of the portion 172 is provided with a shoulder 175 against which bears a ball bearing 174 held against axial displacement by means of an expanding ring 176 or the like. A projection of the sleeve 160 directed towards the interior is designated 177. Axial displacement towards the right of the screw bolt 168, 169, 170 is prevented by the safety member 178 if by rotating of the screw bolt 168, 169, 170 the head 133 of the spring rod 132 is removed towards the left away from the stop 177.

In Fig. 10 the individual elements or members occupy the position adapted for an anti-clockwise rotation, whereas Fig. 11 shows the position of the individual elements adapted for a clockwise rotation. In the first case (Fig. 10) the main driving wheel 137, 138 is coupled by way of the gear wheel 144 to the gear wheel 159, the power from the wheel 144 then being transmitted to the gear wheel 159 by way of a wheel 158 and another gear wheel not shown in the drawings. The coupling claws 162 and 161 are out of engagement in this position. All other driving wheels for the various auxiliary apparatus, as ignition device, charger, pumps and so on, are connected to the driving wheel 159.

For rotation in an anti-clockwise direction (Fig. 11) the gear wheel 137, 138 is out of engagement with the gear wheel 144. The gear wheel 137, 138 is coupled in this case to the gear wheel 159 directly by way of the claws 162, 161. In this case the gear wheels 137, 138 and 159 have the same direction of rotation, whereas in the position shown in Fig. 10 the two gear wheels rotate in opposite directions. The wheel not shown in the drawings and arranged between the gear wheel 158 and the gear wheel 159 effects a reversal of the direction of rotation in the position of the individual elements shown in Fig. 10. In this position according to Fig. 10 the ball bearing 174 acts as thrust bearing as the gear wheels 137, 138 on the one hand and 159 on the other hand rotate in opposite directions.

The not particularly designated starting claws at the front ends of the sleeve 160 and the crankshaft rotate in the same direction.

In the modification shown in Fig. 12 the crankshaft 179 provided at its end facing the gearing with a sleeve 130 is journalled in a slide bearing 181. Into the sleeve 130 of the crankshaft 179 extends the rod 183 which in this case is not formed as a torsional spring but as a coupling member and is provided at one end with a head 184. The latter has axially extending grooves, teeth or the like which engage in corresponding teeth or grooves 182 of the bore surrounding the bolt and thereby warrant a transmission of the torque from the crankshaft upon the bolt. With the rigid construction of the coupling rod 183 the stops 251 shown in Fig. 7 may be dispensed with. The shaft 193 in this case is used as an elastic member for driving the charger.

The other end 185 of the bolt 183 has a shoulder 186 which is formed in a distance from the end of the bolt corresponding about to the axial length of the head 184 provided at the other end of the bolt. The outer surface of the shoulder 186 is provided with axially extending grooves, ribs or the like which cooperate with corresponding ribs, grooves or the like 187 of bevel wheels. The grooves, ribs or the like are provided in the interior of a hub 188 which by means of a ball bearing 189 is rotatably journalled in the wall 190 of the crankshaft case. The hub 188 carries a disc with a cone-shaped toothed rim 191 engaging a toothed rim 192 the axis of rotation of which is arranged about vertically to the axis of rotation of the crankshaft 179 and the coupling rod 183. The bevel wheel 192 is fixed upon a shaft 193. The bevel wheel and the shaft are arranged in a neck-journal 194.

Another hub 196 surrounds the portion 185 of the bolt 183 and the inner wall of same facing the bolt is provided with grooves, ribs or the like by means of which a coupling to corresponding grooves or ribs of the bolt could be effected if the corresponding grooves, ribs and so on engage each

other. As the end portion 185 of the bolt is not provided with grooves, ribs or the like, the hub 196 is not coupled to the bolt 183 but loosely rotates round this bolt, the rotation being transmitted by means of the bevel wheel 195. The hub 196 bears against the wall 198 of the crankshaft case by way of a ball bearing 197. This portion of the case has a perforation 199 by means of which access may be had to the gearing. Through this perforation 199, for instance, a handle or starting crank may be inserted and applied to the head portion 200. The two ends of the hubs 188 and 196 facing each other are surrounded by a ring 201 which bears against the hubs by way of two further rings 202 and 203.

If the direction of rotation of the crankshaft 179 is changed, the direction of rotation of the shaft 193 which serves for driving the charger also would be changed. To warrant, however, that the direction of rotation of the shaft 193 remains the same as previously, the bolt 183 after loosening the members fixing same in its position is axially withdrawn, swung about 180° and inserted again. Hereby the axial ribs or the like of the head 184 of the rod 183 engage corresponding ribs, grooves or the like of the hub 196 so that now this hub is positively coupled to the rod and thereby also to the crankshaft, whereas the hub 188 loosely, i. e. without coupling, surrounds the portion of the rod 183 provided behind the head 184.

Due to this reversal the change of the direction of rotation of the crankshaft has no effect on the shaft 193.

A gear wheel 204 fixed upon the hub 188 serves for driving all other auxiliary apparatus including the cam shaft. The gear wheel 204, for instance a spur gear wheel, is for a clockwise and anti-clockwise rotation always rotated in the same direction.

OTTO NÜBLING.
ERICH WIRTHGEN.

PUBLISHED

MAY 11, 1943.

BY A. P. C.

O. NÜBLING ET AL

GEARING FOR AIRCRAFTS

Filed Oct. 16, 1939

Serial No.

299,652

3 Sheets-Sheet 1

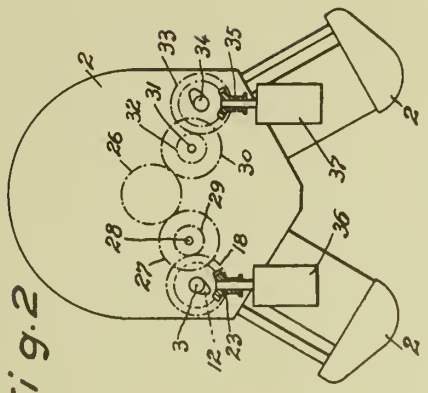

Fig. 2

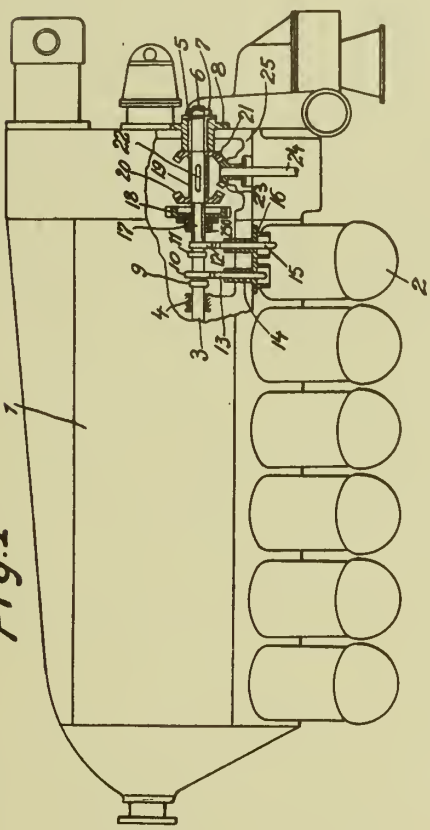

Fig. 1

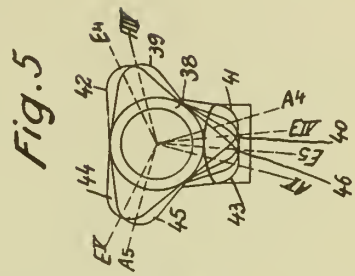

Fig. 5

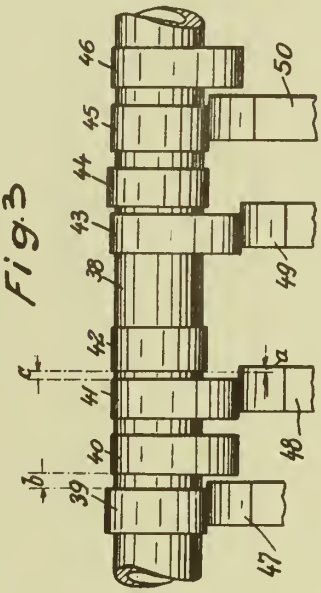

Fig. 3

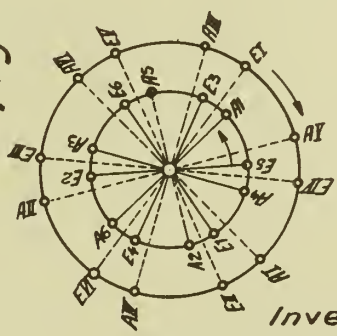

Fig. 4

Inventors:
Otto Nubling
Erick Wirthgen
By Williams, Bradbury
McCaleb & Hinkle
Attorneys.

PUBLISHED

MAY 11, 1943.

BY A. P. C.

O. NÜBLING ET AL

GEARING FOR AIRCRAFTS

Filed Oct. 16, 1939

Serial No.

299,652

3 Sheets-Sheet 2

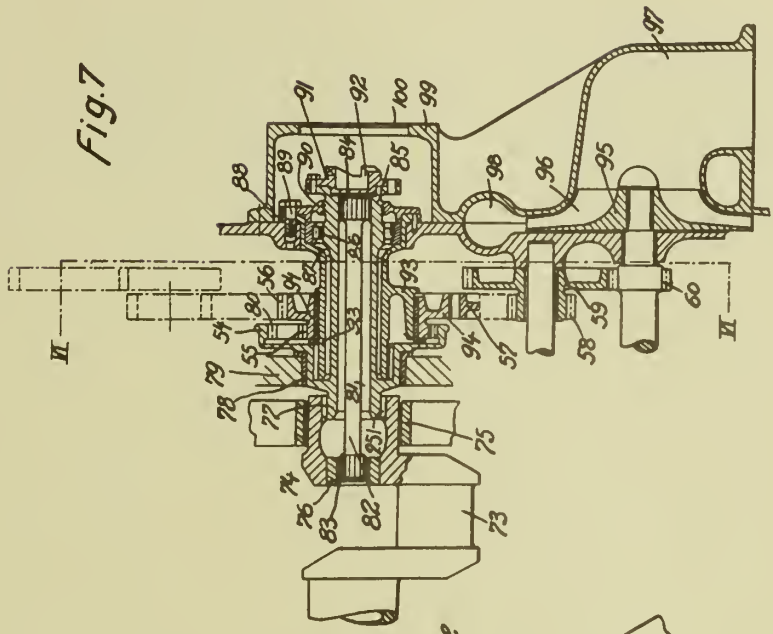

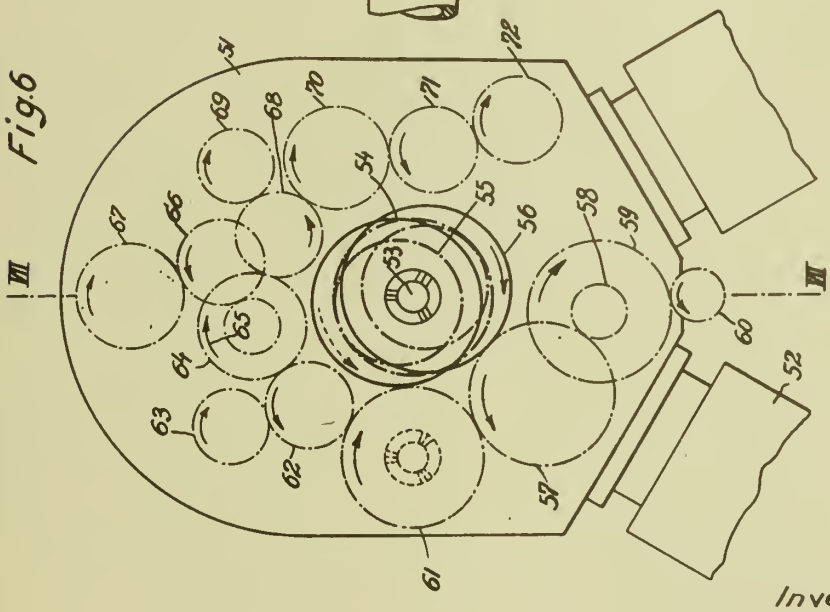

Inventors.
Otto Nubling
Erich Wirthgen
By Williams, Bradbury,
McCaleb & Hinkle
Attorneys.

PUBLISHED
MAY 11, 1943.
BY A. P. C.

O. NÜBLING ET AL
GEARING FOR AIRCRAFTS
Filed Oct. 16, 1939

Serial No.
299,652
3 Sheets-Sheet 3

Fig.10

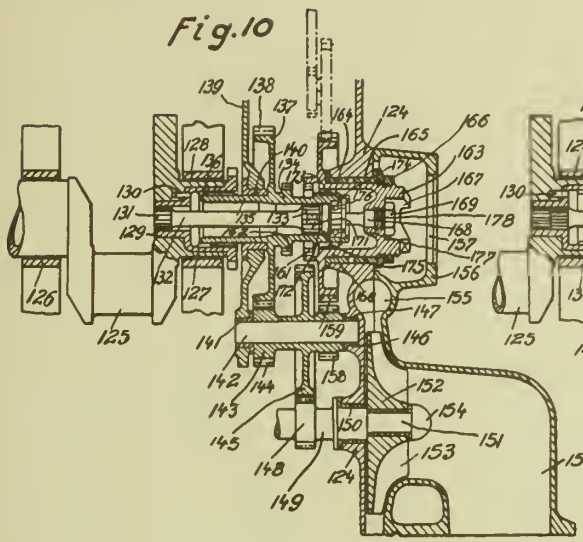

Fig.11

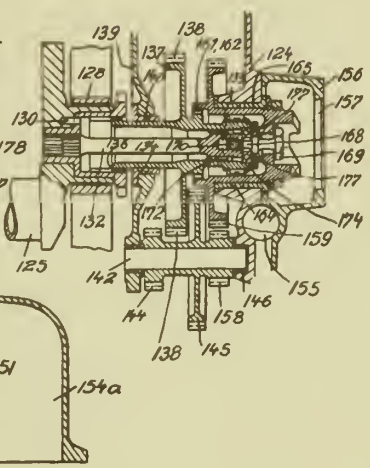

Fig.12

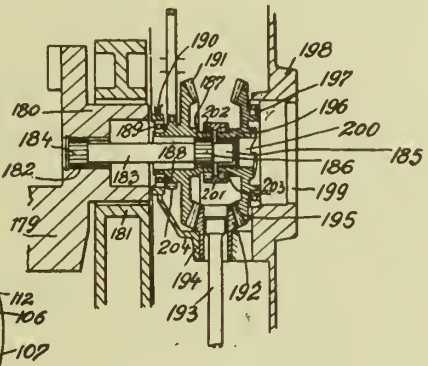

Fig.8

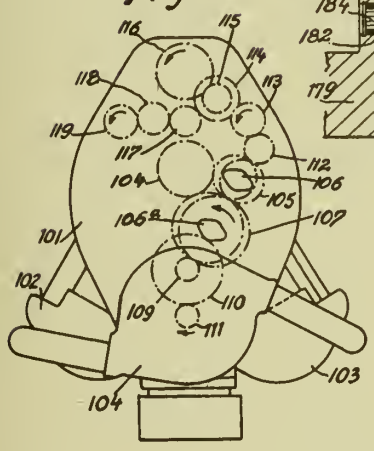

Fig.9

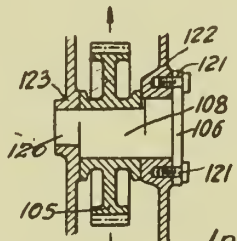

Inventors
Otto Nubling
Erick Wirtkgen
By Williams, Bradbury, McCaleb & Hinkle
Attorneys.

Published May 11, 1943

Serial No. 299,782

ALIEN PROPERTY CUSTODIAN

LINOLEUM COVERINGS FOR FLOORS

Raffaele Amendola, Milano, Italy; vested in the Alien Property Custodian

Application filed October 16, 1939

As it is known linoleum strips for covering of floors, wall socles, stair steps, and the like are generally constituted of a fabric foundation, particularly jute fabric, to which is united by means of calendering or pressing the kneated mass of linoleum. Such strips are applied to a rigid floor by means of mastic or glue, which do the fastening between the free fabric foundation of the linoleum sheet and the floor.

These coverings, although very advantageous under many aspects, show some deficiencies.

The fastening by means of mastic or glue may be weakened on account for inst. of humidity or crystallisation of the adhesive so far as to promote the loosening of the covering from the floor so that it is not advisable to employ the linoleum covering in places situated in the open or submitted to great affluence of people, where hygiene requires very often the cleaning with plenty of water.

Furthermore considering the possible influence of humidity on the adhesive power of the fastening means, it is generally preferred to wait till the floor is completely seasoned before the covering is applied to, so that a period of some length elapses between the casting of the reinforced concrete floor and the appliance of the linoleum covering.

At least, the employment of the jute fabric foundation, which surely is particularly suitable for the purpose, but sometimes costly and of difficult supply, influences noteworthy the cost of the finished product.

The present invention relates to a floor covering, which offers all the advantages of the linoleum covering and eliminates all the disadvantages as said before.

The floor covering according to the present invention consists of two strata: the one of linoleum, the surface of which will be seen after being laid down, and the other of resilient rubber, the surface of which will be applied to the floor. The two strata are juxtaposed and united each other on the whole surface of them, by means for inst. of adhesive or other suitable method. These coverings may be of any form or size, for inst. they can be manufactured in rolls, as the standard strips of linoleum on jute foundation, or in sheets, or plates, or the like, in which the rubber foundation substitutes the one of jute normally employed up to now.

The covering according to the present invention can be applied to the floor to be covered either by means of adhesives or mechanically.

In the first case the inferior stratum of the linoleum covering should be preferably smooth, for the floor covering according to the present invention allows to eliminate the adhesive hitherto employed for linoleum and all the deficiencies connected with them, because the rubber foundation allows to perform the fastening by means of adhesives or mastics employed in rubber floor coverings, which give far more satisfactory results.

In the other case should the fastening of the covering according to the present invention be performed by mechanical means, the surface of the rubber foundation should preferably be provided with prominences of different shape having a dovetail section. These prominences are integrating part of the foundation and are plunged into the fluid cement cast between the floor surface and the covering, so that they are firmly seized as soon as the cement consolidates. It results, that the floor covering is anchored to the floor in a steady and lasting manner.

These mechanical means for the fastening of the covering to the floor are of great importance for the aim of the present invention and represent a particular object of it, for the anchoring obtained by these means is very firm and steady, is not subjected to atmospheric influence, for inst. humidity or heat, and therefore is very suited to the most extensive appliances. Furthermore not being subjected to the influence of humidity the covering can be applied without any delay after the casting of the reinforced concrete floor.

The juxtaposing of the linoleum stratum with the rubber foundation can be done employing any suitable method, either by interposing of adhesives, or of selfvulcanising agents, or of solutions suitable to obtain the adhesion of the rubber foundation to the linoleum sheet, or the like.

According to one way to carry into execution the present invention the elements of the covering which are the linoleum sheet, without the jute fabric support, obtained through pressing or calendering and the rubber foundation sheet are prepared separately and united by means of complementary selfvulcanising rubber solutions.

Another way to carry into effect the present invention is to prepare separately the rubber sheet for the foundation and to coat the surface contacting the linoleum sheet with a suitable adhesive and to contact the coated surface of the rubber sheet with the linoleum sheet by passing the strip for inst. through the linoleum calender, instead of the hitherto employed jute fabric.

As already said, the rubber sheet can be pro-

vided on the surface to be affixed to the floor with prominences or grooves for the anchoring of the covering to the floor by means of fluid cement. During the uniting operation of the rubber foundation to the linoleum sheet it is preferable to protect the prominences or grooves by means of a material which fills completely the interspaces and which is easily torn off at the final operation.

A specification of one preferable way to carry into effect the invention is given only as an example.

The sheet of vulcanized rubber is prepared pressing the sheet in contact with a coarse mesh fabric, if the case treated with known means to avoid sticking of the rubber to it during the vulcanization. The pressure during the vulcanization causes the rubber to plastify and to flow into the meshes of the fabric and to assume their form. As a matter of course changing the type of fabric employed, the shape and size of the prominences will change too. The superior face of the rubber sheet to which the linoleum sheet has to be united can be made rough, as already said, by means of regular fabric during the vulcanization or by rasping, or the like.

Said rubber sheet, which can contain ground rubber scraps, textile fibers and the like, has for inst. a thickness of about 1 m/m. and the vulcanization is performed by a continuous process and pressing the coarse mesh fabric against the rubber sheet.

After the vulcanization the fabric, or the net, or the like, used to form the prominences on the inferior surface of the rubber sheet can be torn off or left on the sheet to protect the prominences till to the uniting operation of the rubber sheet to the linoleum one. The uniting can be performed according to the process illustrated in Fig. 1 of the drawing. The rubber sheet 1, which is still carrying the fabric used for the forming of the prominences, is unrolled from the drum 2, passes through the two rolls 3 and by means of the tensioning roll 4 is sent to the linoleum calender 8, after having been sprayed with adhesive by the jet 5. The kneaded linoleum mass, falling from the hopper 8, is applied to the superior surface of the rubber sheet 1 as this passes between the rolls 6 and 7 and remains firmly united in an uniform stratum by the action of the adhesive and of the pressure exerted by the rolls.

The floor covering strip after being so formed leaves the calender, passes the rolls 9, the coarse mesh fabric 10 is torn off and enrolled on the drum 11, and the finished strip is enrolled on the drum 12.

The different processes as described do not limitate the scope of the invention, though constituting particular object and preferred actuating means. It is as well understood that the rubber foundation of the floor covering can be obtained from any rubber compound. By rubber is meant any natural or synthetic or regenerated or ground rubber, admixed or not with fillers, vulcanising agents, accelerators and such like addenda of the rubber art.

RAFFAELE AMENDOLA.

PUBLISHED

MAY 11, 1943.

BY A. P. C.

R. AMENDOLA

LINOLEUM COVERINGS FOR FLOORS

Filed Oct. 16, 1939

Serial No.
299,782

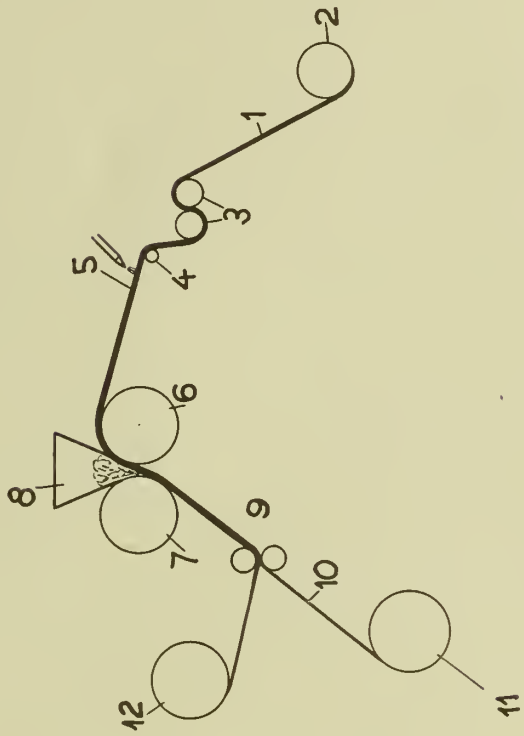

Inventor

RAFFAELE AMENDOLA

By Young, Emery & Thompson
Attorneys

Published May 11, 1943

Serial No. 299,880

ALIEN PROPERTY CUSTODIAN

METHOD OF AND MACHINE FOR DISBARKING TRUNKS ESPECIALLY OF FOLIAGE TREES

Richard Mehlhorn, Mannheim-Waldhof, Germany; vested in the Alien Property Custodian

Application filed October 17, 1939

This invention relates to methods of and machines for disbarking trunks especially of foliage trees. The disbarking of trunks of trees had heretofore been carried out according to various methods by peeling, milling or scaling. These known methods, however, have not been fully satisfactory inasmuch as they are but little adaptable and not at all applicable to certain kinds of barks, with the result that either the disbarking could not be effected with the necessary degree of exactness and that a subsequent and rather expensive manual work had been required, or that the wastage in peeling had been quite excessive.

Especially in case of disbarking trunks of foliage trees these disadvantages are present to a quite considerable extent, this being due in the first place to the smoothness of the bark offering but a small surface of attack to the operating tools and in the second place to the rather irregular growth of trunks of this kind.

In order to avoid these drawbacks and disadvantages according to my invention I propose to effect the disbarking of trunks of trees, especially of foliage trees, by means of a disbarking disk or disks rotating about an axis parallel to the axis of the trunk in such a way that the bark is removed from the trunk by action of the beats exerted in rapid succession onto the bark by striking tools provided on said disbarking disk or disks rotating at high speed, thus entirely avoiding any operation of peeling, milling or scaling. In order to further avoid any unnecessary consumption of power, the speed of the rotating disbarking disk and therewith of said striking tools is preferably so chosen that each striking tool will be in a position to act onto the bark of the trunk at the moment when the latter by action of the preceding striking tool has been slightly thrown in upward direction and thereupon again fallen back into its initial position. It has been found that it is of advantage to arrange the said striking tools in such a manner on the disbarking disk that the number of beats exerted by the former onto the bark amounts to at least 80 per second.

In this case, moreover, it is possible to use either a single disbarking disk or also a plurality of such disks, for instance two disks arranged oppositely to each other.

According to my invention the disbarking tool as a whole may for instance consist of a rotating disk provided with projecting striking tools distributed at proper distances from each other over the periphery of said disk, the front edges or surfaces of said striking tools acting onto the bark to be removed from the trunk, said edges or surfaces forming an obtuse angle with the plane directed tangentially to the peripheral surface of the disbarking disk at the line of intersection with the said edges or surfaces.

The striking tools should project but little above the peripheral surface of the disbarking disk, for instance, only about from two or three millimeters and in no case more than four millimeters.

In order to attain proper disbarking also in case of trunks of trees of especially irregular growth it will be of advantage to round-off the rotating disbarking disk as well as the striking tools provided thereon on one or both sides of said disk and said tools. In this manner provision may be made for the proper guiding of the trunk by the workman, especially in case of trunks of especially irregular or curved growth in order to attain proper disbarking.

It has further been found that the operation of the disbarking machine may be considerably improved and its working capacity increased, if instead of one disbarking disk or two oppositely disposed disbarking disks there is provided a greater number of such disks side by side on one and the same shaft. In case of using the preferred opposite arrangement of disbarking disks, the several disks mounted on one shaft may advantageously extend into the interstices between the disks on the other shaft.

It has further been found that the construction of the disbarking machine may be essentially simplified and the costs of operation greatly reduced, if the striking tools on the disbarking disk or disks are made of symmetrical shape in such a manner that the several edges of said striking tools may alternately or successively be used as striking edges. Thus the striking tool or tools, in order to use another striking edge thereof, may be taken out of the disbarking disk and again inserted thereinto after having been turned through an angle of 90 or 180 degrees.

Owing to the fact that the end of the trunk with the bark still thereon cannot well be kept in position at or nearly at the end of the operation of disbarking according to my invention I further propose to turn the trunk in horizontal direction through an angle of 180 degrees when about one half of said trunk has been disbarked so that the workman, in order to complete the operation of disbarking, may grip the trunk at the end which had already been disbarked. Such turning of the trunk may easily be accomplished by the aid of a fork which may be actuated, for instance, by a foot lever in order to slightly lift the trunk, therewith moving it out of the range of action of the striking tools on the disbarking disk or disks, when resting on said fork which is likewise arranged to be rotated in horizontal direction. In this manner the necessity of a second workman on the other side of the machine will be dispensed with.

In the accompanying drawings which form part of this specification I have represented several examples of construction of a disbarking ma-

chine constructed and operated in accordance with my invention.

In the drawings, Fig. 1 is a side view of my novel disbarking machine having only one disbarking disk provided with the aforementioned striking tools, Fig. 2 a front-view, partly in section, of the machine shown in Fig. 1, Fig. 3 a side-view of a second example of construction of a disbarking machine provided with a pair of oppositely disposed disbarking disks with the aforementioned striking tools, Fig. 4 a cross-section along line IV—IV of Fig. 3, Fig. 5 an enlarged section through a part of a disbarking disk with the striking tools thereon which disk or disks form part of the machine shown in Figs. 1, 2 and Figs. 3, 4, respectively, Fig. 6 a side-view of part of a disbarking disk as shown in Fig. 5 with one of the striking tools mounted thereon, Fig. 7 a perspective view of the disbarking disk and striking tool shown in Fig. 6, Fig. 7 a side-view of a third example of construction of a disbarking machine having a plurality of oppositely rotating disbarking disks with striking tools, Fig. 9 a top-view and Fig. 10 a front-view of the machine shown in Fig. 8, Fig. 11 an enlarged partial view and section through a part of a disbarking disk with striking tools of special construction, one of the striking tools being shown in section. Fig. 12 a section through the disbarking disk and striking tool, said section being taken perpendicularly to Fig. 11, and Fig. 13 a perspective view of the disbarking disk and striking tool shown in Figs. 11 and 13.

In the construction of the disbarking machine as shown in Figs. 1 and 2 the shafts **2** with the oppositely rotating disks **3** and **4** thereon are mounted within the cast-iron casing **1** of the machine. The disk **3** which is provided with the striking tools **5** is the disbarking disk proper, while the disk **4** serves only as a guide disk for the trunk to be disbarked. The two disks **3** and **4** are each driven by means of an electric motor (not shown) which may conveniently be mounted on the casing **1**.

The trunk **7** that is to be disbarked is pressed by way of a spring **8** and a roller chuck **9** with holdfasts against the disks **3** and **4** and at the same time fed forward. The roller chuck **9** is driven by means of an electric motor **10** by way of pulley **11**, a belt as indicated in dash-dotted lines, a pulley **12**, bevel gears **13**, pinion **14**, gear-wheel **15** meshing with the latter and shaft **16**. A hand-lever **17** serves to adjust the trunk **7** and to regulate its motion. Rollers **18** serve as guides for the trunk when being introduced into the machine as well as when being removed therefrom, the trunk sliding in either case in inclined position over said rollers.

In the second example of construction of the disbarking machine with two disbarking disks as shown in Figs. 3 and 4 the two disks **3** and **3'** are both provided with striking tools **5**, the said disks likewise rotating in opposite directions to each other to assist in keeping the trunk **7** in proper position intermediate the two disbarking disks **3** and **3'**. Said disks are driven each by an electric motor **6'** by way of the pulleys **19**, **19'** and belts as indicated in dash-dotted lines. In other respects the motion of the trunk takes place by means of a roller-chuck as had been described above in connection with Figs. 1 and 2.

The disk **3** is rounded-off at its sides as indicated at **3'** in Fig. 5. In like manner the striking tools **5** are rounded-off at their sides, as indicated at **5'** in Fig. 5 in order to fit the rounded-off sides of the disks **3** and **3'**.

According to Figs. 6 and 7 which show a part of one of the disks **3** with one of the striking tools **5** in an enlarged side-view and perspective view, respectively, the striking edge **5''** acting on the back forms an obtuse angle α with a plane **23** laid tangentially onto the peripheral surface of the disk **3**, rotation of said disk being assumed in counter-clockwise direction.

In the third example of construction of the disbarking machine as represented in Figs. 8, 9 and 10 shafts **26** are fixedly mounted on the sheet iron casing **25** of the machine, said shafts **26** carrying rotatably thereabout the disbarking disks **28** with the striking tools **27** thereon. Said disks **28** are rotated by means of the electric motors **31** and **31'** mounted on reinforcing ledges **32** of the casing **25**. Access to the interior of the casing may be had through the door **33**.

As shown in Figs. 11, 12 and 13 the striking tools **27**, of which but one is shown in these figures, are of prismatic or cubic form with striking ledges **27'** soldered to each of the lateral surfaces of the body of the striking tool. The striking tools with the striking ledges as a whole are mounted in suitably shaped depressions in the peripheral surface of the disk **28** by means of countersunk screw-bolts **34**. The acting surfaces of the working edges of the striking tool, moreover, are not directed radially to the disk **28** but form a certain angle with the radius of said disk. The front striking edge or surface of the striking tools, accordingly, forms an obtuse angle α with a plane laid tangentially to the peripheral surface of the disk **28** through the line of intersection between said striking edge or surface and said disk. Preferably this angle α is an obtuse angle, as otherwise, that is with a striking edge or surface at a right or not too small acute angle with the periphery of the disk **28**, there will yet be attained a certain although essentially reduced disbarking effect principally on account of greater wastage in bark, because in such case there is exerted more or less a milling action instead of the pronounced striking action which is a prominent feature of my present invention. By unscrewing the screw-bolt **34** the striking tool may be taken out of the disk **28** and again inserted thereinto after having been turned through an angle of 90 or 180 degrees about its horizontal or, as the case may be, its vertical axis. In this manner it will be possible to use alternately or successively all seven other edges or surfaces of the striking tool as striking edges as had above been indicated.

The trunk **7** after having been disbarked over about one half of its length is lifted from the disbarking disks by means of the fork **36** which may be actuated by the foot-lever **35** and turned together with said fork in horizontal direction, whereupon said trunk is gripped by the workman at its disbarked end and the fork again lowered so that now the part of the trunk which has not yet been disbarked will rest on the disks **28**.

The guide-roller **37** serves to assist in sliding the trunk out of the machine upon completed disbarking. The chips produced during the operation of disbarking are discharged past the inclined chute **38**.

RICHARD MEHLHORN.

PUBLISHED

MAY 11, 1943.

BY A. P. C

R. MEHLHORN

METHOD OF AND MACHINE FOR DISBARKING TRUNKS ESPECIALLY OF FOLIAGE TREES

Filed Oct. 17, 1939

Serial No. 299,880

4 Sheets-Sheet 1

Fig. 1

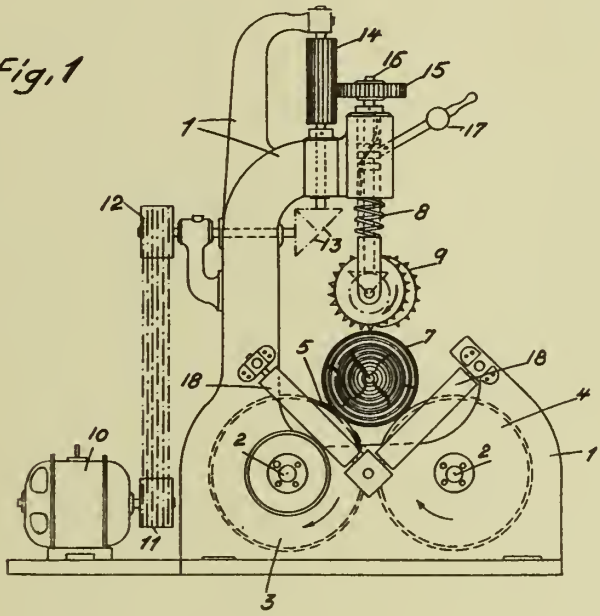

Fig. 2

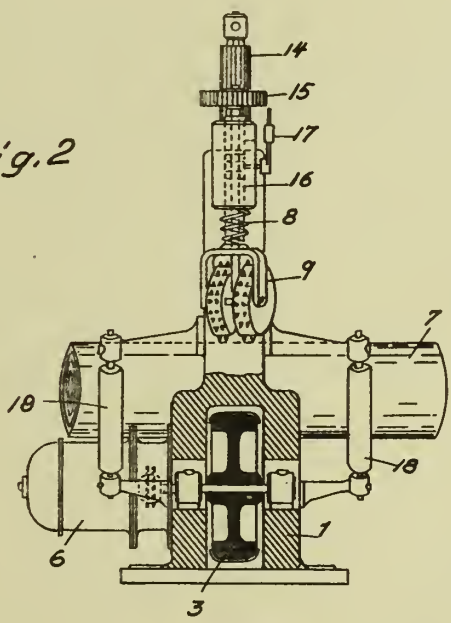

INVENTOR
RICHARD MEHLHORN,

BY Bailey & Larson
ATTORNEYS

PUBLISHED

MAY 11, 1943.

BY A. P. C.

R. MEHLHORN

METHOD OF AND MACHINE FOR DISBARKING TRUNKS ESPECIALLY OF FOLIAGE TREES

Filed Oct. 17, 1939

Serial No. 299,880

4 Sheets-Sheet 2

Fig. 3

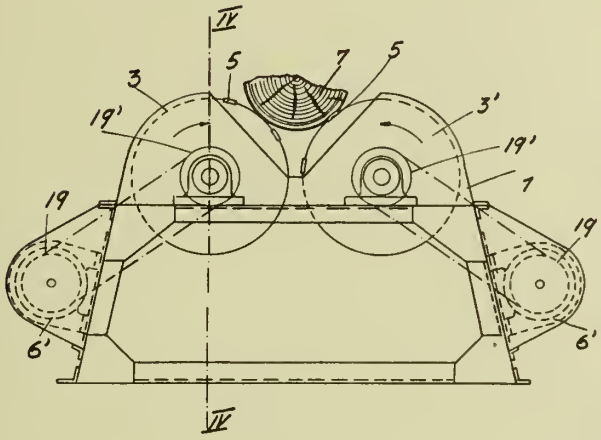

Fig. 4

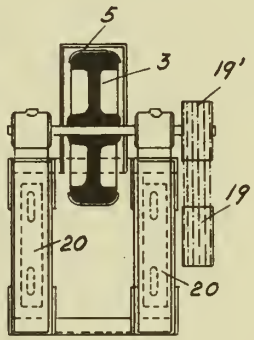

Fig. 6

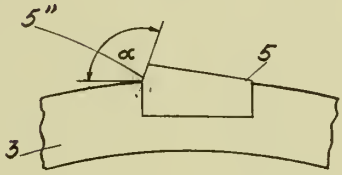

Fig. 5

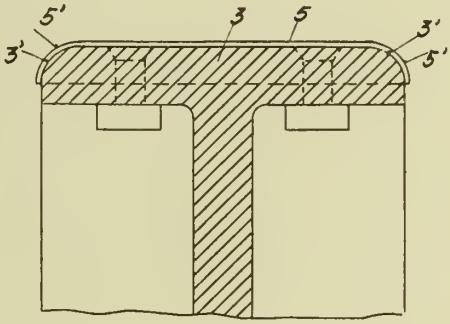

Fig. 7

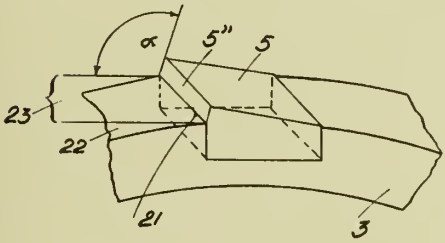

INVENTOR
RICHARD MEHLHORN,

BY Bailey & Parsons
ATTORNEYS

PUBLISHED

MAY 11, 1943.

BY A. P. C.

R. MEHLHORN

METHOD OF AND MACHINE FOR DISBARKING TRUNKS ESPECIALLY OF FOLIAGE TREES

Filed Oct. 17, 1939

Serial No. 299,880

4 Sheets-Sheet 3

Fig. 8

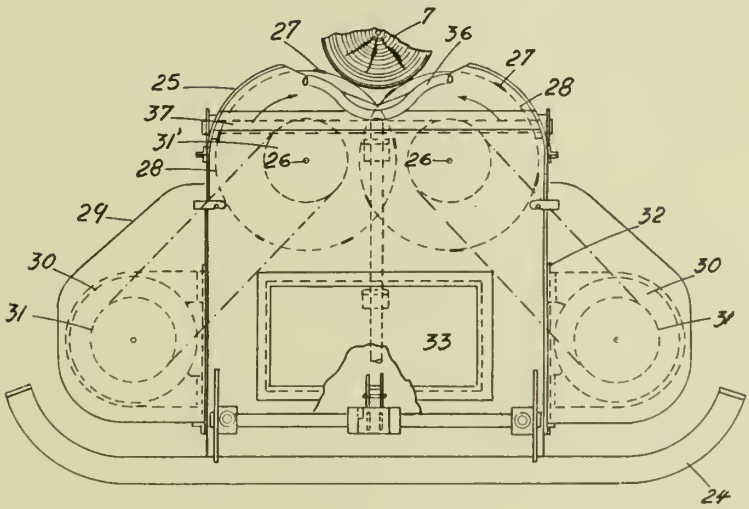

Fig. 9

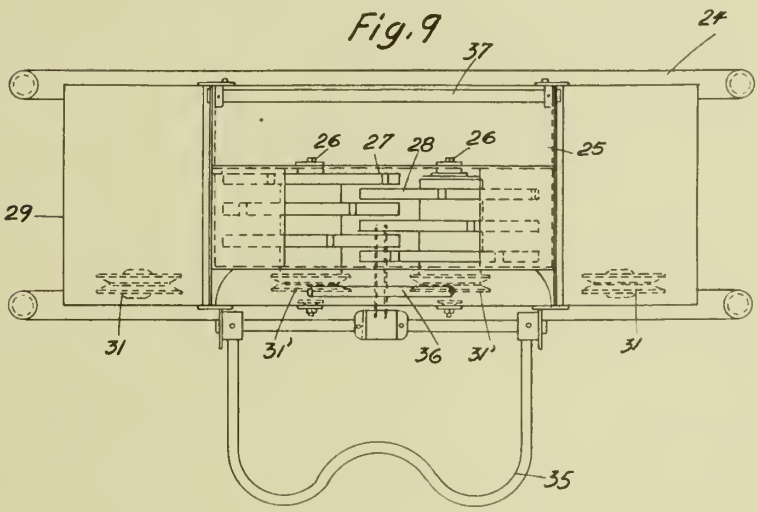

INVENTOR
RICHARD MEHLHORN,

BY Bailey & Parsons
ATTORNEYS

PUBLISHED

MAY 11, 1943.

BY A. P. C.

R. MEHLHORN

METHOD OF AND MACHINE FOR DISBARKING TRUNKS ESPECIALLY OF FOLIAGE TREES

Filed Oct. 17, 1939

Serial No. 299,880

4 Sheets-Sheet 4

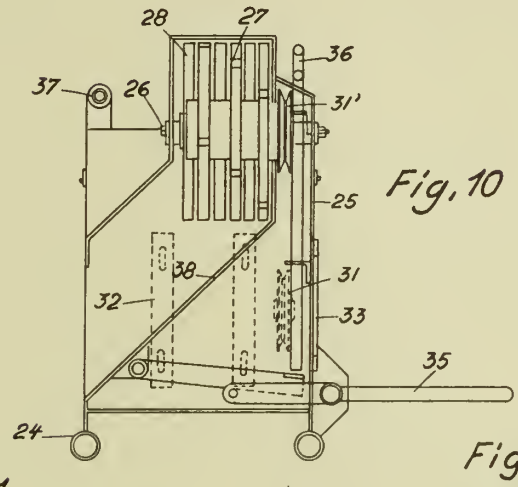

Fig. 10

Fig. 11

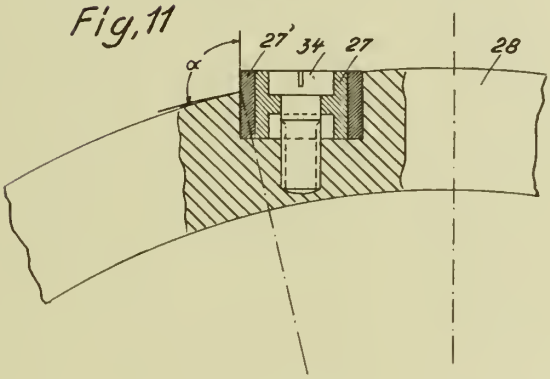

Fig. 12

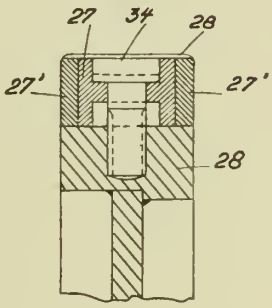

Fig. 13

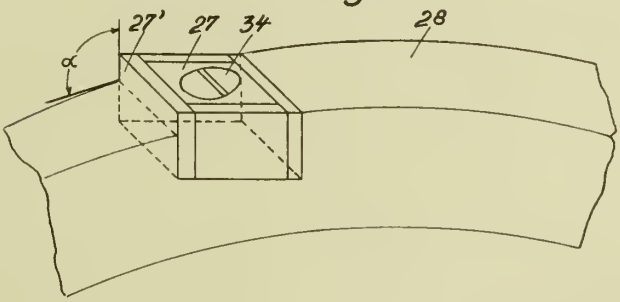

INVENTOR
RICHARD MEHLHORN,

BY Bailey & Larson
ATTORNEYS

Published May 11, 1943

Serial No. 303,121

ALIEN PROPERTY CUSTODIAN

MOTOR WITH CYLINDERS ARRANGED IN ROWS IN V-FASHION

Fritz Gosslau, Berlin-Charlottenburg, Germany; vested in the Alien Property Custodian

Application filed November 6, 1939

The present invention relates to a motor having cylinders arranged in rows and set at an angle to the crank shaft in V-fashion. Each cylinder of the motor according to the invention being provided with a combustion space of approximately the shape of a spherical segment and the admission- and exhaust valves of each cylinder enclosing an angle of more than 35° and a plane passing through both valve axes of each cylinder forming an angle with the axis of the crank shaft of at least 5° and at the most 85°.

The motor according to the invention thereby combines the advantages of a star-connected motor—usability of the spherical head with large valves and best cooling—with those of a motor having cylinders arranged in rows and set in V-fashion—low head resistance, good sight and compact construction—and therefore represents a substantial improvement of the already highly developed air cooled motors having cylinders arranged in rows and set in V-fashion, particularly the aircraft motor. The novel construction results in an inclined echelon or staggered arrangement of the valves extremely favorable for the cooling in which all exhaust valves are uniformly subjected to the stream of cooling air sub-divided due to this arrangement in a natural manner.

In connection with air cooled motors for motor-cars having cylinders mounted in rows it has already been proposed to use valves arranged in parallel to each other in the flat cylinder head, the axis of the valves lying in a plane inclined to the longitudinal axis of the motor, and to coordinate tilting levers having axes extending under an angle to each other.

An air cooled motor also has already been described in which in a cylinder head in the shape of a spherical segment two valves are arranged in inclined relation to each other in a transverse plane vertically to the direction of the row of cylinders.

These known constructions have serious drawbacks concerning a cooling free of objection and a high yield of output. These drawbacks are removed according to the invention in a manner free of objections.

The advantages of the free constructional arrangement of the star-connected motor cylinder regarding the thermodynamics and cooling have, according to the invention, been transferred in a manner free of objections to the arrangement of the cylinders in rows.

In the last years air cooled motors having cylinders arranged in rows have proved such surprising high outputs in flying that for certain competitions special motors have been developed whereby the designers strived to take into consideration the latest knowledge in the construction of aircraft motors and to warrant the highest possible degree of output and cooling at lowest resistance.

It is surprising in connection with these latest models of motors that the combustion spaces of the cylinders never show the form of a spherical segment in spite of the fact that the thermal superiority of this shape of combustion space surely has not been unknown to the designers. All these heavy duty type motors are fitted with a charger in connection with which valves as large as possible are desired. Nevertheless, modern air cooled motors having cylinders arranged in rows are provided with valves inclined at a small angle only, i. e. small valves. The drawbacks of such valves, i. e. high charging pressure required, high charging temperature, exhaust throttling, can under no circustances have been unknown.

If important generally known and simple requirements of the thermodynamics and the rules of flow have been disregarded, hindrances must have been present which are enumerated in the following and are to be removed by the invention. Simple considerations prove that, on account of the small distance of the cylinders from each other due to the overall length of a motor having cylinders arranged in rows, the valves may have a rather small relative inclination only, if all the valves of one row of cylinders are to be arranged one after another in a plane passing through the longitudinal axis of the crank shaft. In this arrangement want of space, therefore, forbids the spherical shape of the combustion space most favorable for obtaining best thermodynamic and cooling results.

If on the other hand, in connection with a spherical head the valve axes of the individual cylinder are arranged in a plane vertically to the crank shaft, no difficulties regarding the space but difficulties regarding the cooling result, because with this arrangement the cooling air must flow between the valve chambers of the foremost cylinder also between those of the second, third and so on as far as to the last cylinder of each row. The air flowing between the valve chambers absorbs such a large amount of heat that it would not be cool enough to warrant a sufficient cooling of the rearmost cylinders even if flowing of the air in contact with the cooling surfaces could possibly be effected. As is well

known, however, the flow of air already is ruptured after passing the first cylinder and the rear cylinders become too hot to obtain in them as high outputs as are possible by the use of a spherical combustion space.

It will therefore be seen that hitherto the valves of the individual cylinders have been arranged in parallel or under a small angle to each other only and always in the main planes of the motor, i. e. vertically or in parallel to the crank shaft and that therefore the hitherto known constructions of air cooled motors having cylinders arranged in rows represent incomplete solutions only considering the construction, the cooling and the thermodynamics.

To substantially improve motors having cylinders arranged in rows the inventor has set the problem to transfer to this construction the cylinder head known per se with a combustion space in the shape of a spherical segment and the large valve dimensions possible only with this shape of combustion space and to provide besides this the most favorable cooling ratios to thereby allow substantially increased outputs per liter of fuel which also may be used in continuous operation.

According to the present invention the arrangement of the valves corresponding to the main planes of the motor is fundamentally abandoned and the plane passing through the axes of two valves belonging together intercepts the crank shaft under a certain angle. Herewith, an inclined echelon arrangement of the individual planes is obtained and the valves may be inclined to each other under such a large angle that the combustion space may be spherically shaped.

A flowing test surprisingly clear acknowledged the supposition that by this means the cooling problem also is solved in a rather ideal manner. In contradistinction to the hitherto prevailing opinions it was found that the cooling air leaving the cooling shaft by no means branches off at right angles to the crank shaft towards the cylinders but under a certain angle which in a highly desirable manner may be made agree with the angle required for constructional reasons by the inclined echelon arrangement of the valve planes.

The invention, therefore, not only allows to transfer the cylinder construction turned out excellently well in connection with star motors upon a motor having cylinders arranged in rows, but, by the trick of the inclined echelon arrangement of the planes of the valve and by the tilting levers as well as the coordinated casings arranged at right angles to each other, it is even possible to provide equally favorable cooling airflowing ratios. This could be proved in a convincing manner by flowing tests carried out.

As mentioned already above, the invention combines the advantages of the star connected motor—usability of the spherical head with large valves and best cooling—with those of a motor having cylinders arranged in rows—low front resistance, good sight—and therefore represents a substantial improvement of the already highly developed aircraft motor with cylinders arranged in rows. The advantages obtained according to the present invention appear in particular in connection with air cooled motors having cylinders arranged in rows, but the arrangement according to the invention also has proved to be of advantage in connection with liquid cooled motors.

In the accompanying drawings the invention is shown by way of example.

In these drawings:

Fig. 1 is a perspective view of a portion of an aircraft motor having rows of cylinders arranged in accordance with the invention,

Fig. 2 is a broken away perspective top view of one of the rows of cylinders,

Fig. 3 is a broken away perspective view of a row of cylinders looking in an inclined direction,

Fig. 4 is a perspective detail top view of two juxtapositioned cylinders, and

Fig. 5 is a diagrammatic view of the arrangement of the two rows of cylinders.

In Fig. 1 an aircraft motor 1 is provided with cylinders arranged in rows 2 and 3. The cylinder heads 4 have a combustion space in the shape of a spherical segment and are provided with the valve casings 5 and 6 as well as with the corresponding gas pipe connections 7 and 8 respectively. The valves arranged in the interior of the valve casings 5 and 6 are not particularly shown. They are enclosed by means of the casings 9 and 10. In correspondence with the spherical shape of the combustion space the shafts are strongly inclined with regard to each other. A plane passing through the shafts intercepts the crank shaft not vertically but under another angle, preferably an angle between 5° and 85°.

The casings 9 and 10 surround the valve springs and the parts belonging to the tilting levers. They are arranged vertically to each other so that the lever ends against which contact the tappets are closely arranged to each other preferably in the range of the outer delimitation of the cylinder row. In this position the passages 12 for the cooling air result between the casings. If within the casing surrounding the motor the stream of cooling air is supplied between the cylinder rows, individual streams, directed obliquely towards the rear and outwardly, branch off above the cylinder heads which streams flow across the valve casings 5, 6. The cooling may further be improved by providing cooling ribs extending between the valve casings in the direction of the flow of the cooling air.

In Fig. 2 a top view of the cylinder row 2 is shown. The cylinder head in the shape of a spherical segment is designated 4. A transversely arranged tilting lever-casing is designated 10, whereas 9 designates a longitudinally directed tilting lever-casing. It will be seen that these casings are arranged about vertically to each other. Moreover, the figure shows that the planes passing through the valve axes intercept the crank shaft under an acute angle.

Fig. 3 shows a cylinder row as it appears when looking in an oblique direction. It will be seen that the end 13 of the longitudinally directed tilting lever-casing 9 and the end 14 of the transversely directed casing 10 are arranged close to each other and that the tilting levers are actuated by tappings 15, 16 which cross each other and are driven by a common cam shaft arranged outside the cylinder row. The longitudinal arrangement of the casing 9 has the advantage that the covering of the motor and also that of the body at this portion may obtain a shape very favorable from the point of view of air flowing.

Fig. 4 shows in perspective top elevation two juxtapositioned cylinders and illustrates the manner in which the relatively obliquely arranged tilting lever-casings surround a passage 12 across which the stream of cooling air, obliquely flowing

towards the cylinder head, may freely pass. The tappets in this case being arranged at the flowing off side.

Fig. 5 diagrammatically shows the two rows of cylinders, the arrangement of the valves and the subdivision of the stream of cooling air in connection with a motor having two rows of cylinders. The cylinder heads are designated **4**. The valves **18**, **19** are arranged in planes which are inclined under an angle α to the longitudinal axis of the motor. The individual streams of the cooling air indicated by their centre lines **20** flow in an inclined direction across the valve chambers. The cooling ribs between the valves of each cylinder not shown in the drawings are arranged in the direction the individual air streams have at this point.

The constructional arrangement according to the invention is of great importance in connection with air cooled aircraft gearings may, however, also be used in connection with any other motors. The invention may also be employed in connection with motors supplied with cooling air by means of a special blower.

The drawings only show examples of constructions.

FRITZ GOSSLAU.

PUBLISHED

MAY 11, 1943.

BY A. P. C.

F. GOSSLAU

MOTOR WITH CYLINDERS ARRANGED IN ROWS IN V-FASHION

Filed Nov. 6, 1939

Serial No. 303,121

3 Sheets-Sheet 1

Fig. 1

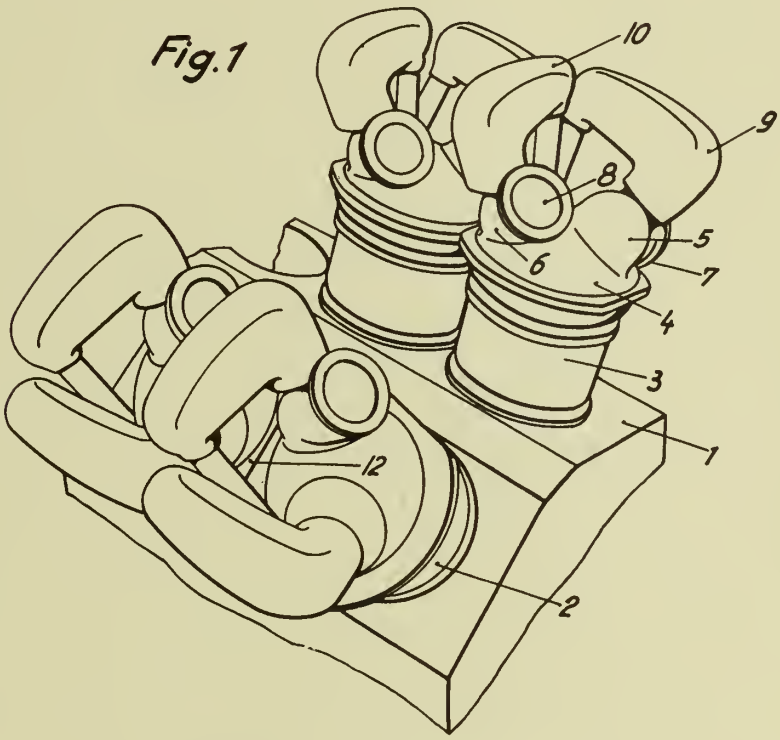

Fig. 2

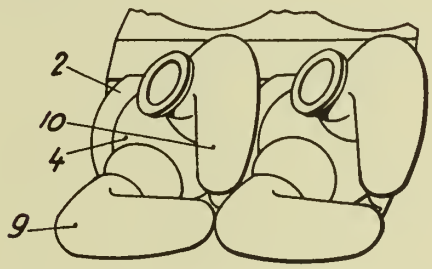

Inventor

F. Gosslau,

By

E. F. Wenderoth

Attorney

PUBLISHED

MAY 11, 1943.

BY A. P. C.

F. GOSSLAU

MOTOR WITH CYLINDERS ARRANGED IN ROWS IN V-FASHION

Filed Nov. 6, 1939

Serial No. 303,121

3 Sheets-Sheet 2

Fig. 3

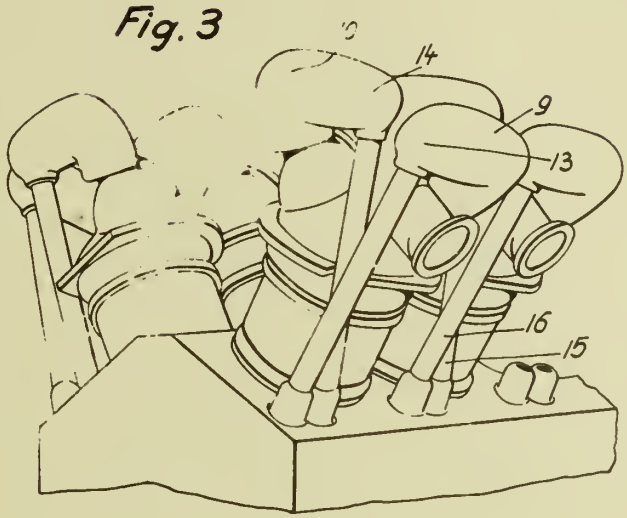

Fig. 4

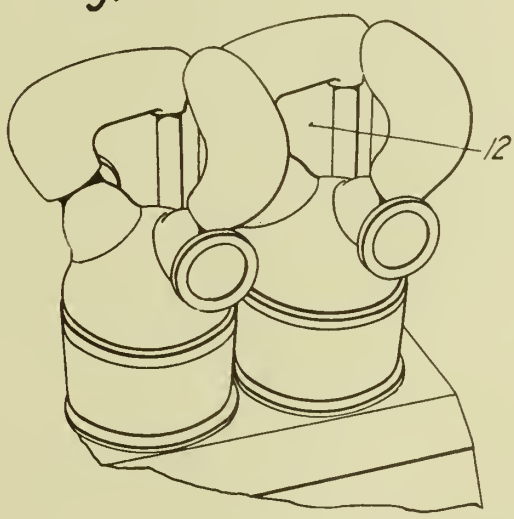

Inventor

F. Gosslau

By

E. F. Wenderoth

Attorney

PUBLISHED

MAY 11, 1943.

BY A. P. C.

F. GOSSLAU

MOTOR WITH CYLINDERS ARRANGED IN ROWS IN V-FASHION

Filed Nov. 6, 1939

Serial No. 303,121

3 Sheets-Sheet 3

Fig. 5

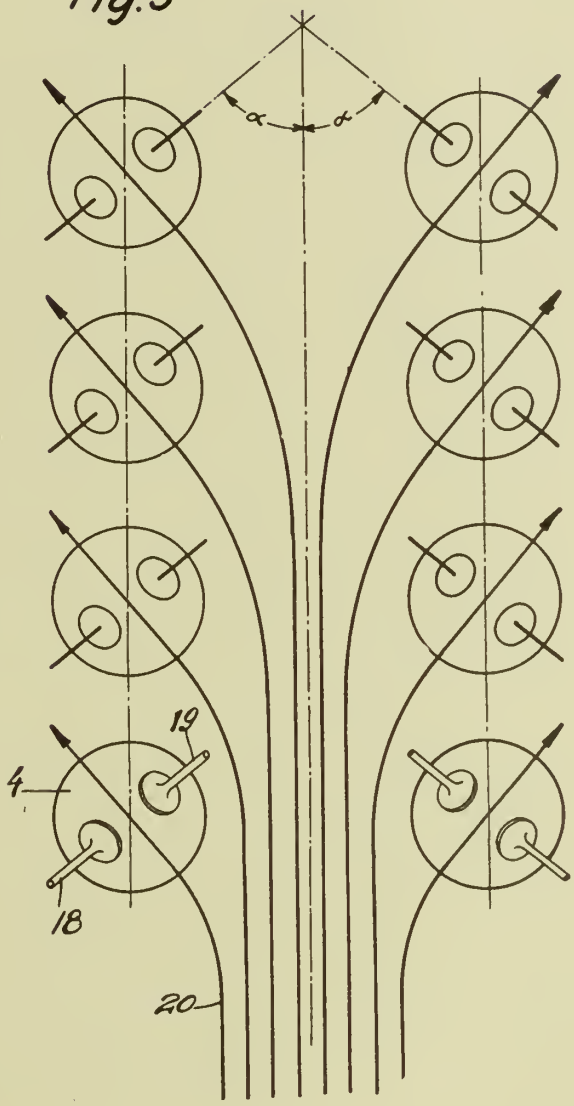

Inventor

F. Gosslau,

By E. F. Wenderoth

Attorney

Published May 11, 1943

Serial No. 304,214

ALIEN PROPERTY CUSTODIAN

METHOD OF INCREASING THE VOLUME OF ORGANIC SUBSTANCES, PARTICULARLY VEGETABLE SUBSTANCES

Joachim Böhme, Berlin-Schoneberg, and Karl Suntheimer, Hamburg, Germany; vested in the Alien Property Custodian

No Drawing. Application filed November 13, 1939

This invention relates to a method of increasing the volume of organic substances, particularly vegetable substances.

When treating organic substances, particularly vegetable substances under the action of the electric field produced by high-frequency currents, for instance, under the action of ultra-short waves it has occasionally been observed that an increase in volume of the substance under treatment could easily be detected, the increase being obviously brought about by the electric field. Thus, for instance, such an increase in volume has been ascertained when treating cereals and tobacco as well. Formerly it was assumed that the increase in volume occurred always automatically when treating the substances under the action of the electric field produced by high-frequency currents and that the increase in volume depends only upon the value of the voltage applied; however, it has hitherto not been possible to ascertain whether an increase in volume occurred or not. Even when employing high-frequency generators of a considerable output the substance under treatment had often experienced no increase in volume.

The object of the present invention is to provide a method, whereby a permanent increase in volume may be attained with certainty. According to the invention the temperature of the substance to be treated must be increased as quickly as possible, for instance, withon 30 seconds to about 30 to 50 degrees centigrade or more and then the substance is preferably cooled down at once. Consequently, the increase in volume depends according to the invention upon as rapid a heating of the substance as possible and the increase is the greater, the more rapid the temperature increases. To attain such a rapid increase in temperature it is therefore not sufficient as had hitherto been assumed to increase, for instance, the voltage or power of the high-frequency generator, but the generator must be rated for a predetermined minimum power referred to the mass or the weight of the substances to be treated, i. e., the high-frequency generator must be so rated that for every gram of the substance under treatment a wattage of about 4 to 5 watts or more is available. This has been substantiated by a number of tests carried out at different wattages. For instance, an increase in volume of tobacco by more than 20% has been attained when treating one gram of the substance in accordance with the above-mentioned data.

It may be assumed that the co-called wood or xylem cells which have their open ends under the palisade tissue of foliage leaves and serve to convey water are enlarged by the high-frequency treatment, since they are very thin and extremely elastic. The water contained in the cells is first heated during the treatment and expands thus bringing about also an enlargement of the wood cells. When the substance is cooled down no water loss occurs so that no thermal reaction of the substance treated takes place and therefore the quality thereof is by no means impaired.

The increase in volume of tobacco is of particular advantage to the dressing which may consequently be effected under considerably more favorable conditions. The same applies to any other organic substances, particularly vegetable substances. The increase in temperature up to about 40 to 50 degrees centigrade which occurs when the volume of the tobacco increases by approximately 20% does not affect by any means the quality of the tobacco. The volume may be increased according to the invention to a still greater extent; however, in this case the quality of the tobacco is under circumstances impaired.

KARL SUNTHEIMER.
JOACHIM BÖHME.

Published May 11, 1943

Serial No. 304,413

ALIEN PROPERTY CUSTODIAN

HIGH GRADE STEELS FOR BUILDING PURPOSES

Roland Wasmuht, Dortmund, Germany; vested in the Alien Property Custodian

No Drawing. Application filed November 14, 1939

Recently it has been discovered, that the commonly used high grade steels for building purposes, which up to the present are used in rolled state, possess certain inconveniences in so far as, when they are used in thicker dimensions, unfavourable physical properties occur in the interior of the sections, especially a comparatively low notch strength. If the bending tests, which have been recently proposed for the testing of steels for building purposes with longitudinally welded on caterpillar weld are carried out, surprisingly small bending angles are ascertained at the testing of the commonly used steels for building purposes at the moment when the bending test is applied to section cross-sections which are thicker than 30 mm. The bad notch test values and also the small bending angles of the commonly used steels for building purposes at the caterpillar weld bending test do not make it advisable to employ these steels for big welded building elements. Quite recently a number of accidents have really occurred in building constructions, in which section thicknesses of more than 30 mm. have been employed.

By thorough experiments it has been proved, that these inconveniences of the commonly used high grade steels for building purposes do not occur, if steels are employed which have been obtained by melting according to metallurgical points of view. Surprisingly it has been ascertained, that the physical properties of the high grade steels for building purposes remain very favorable also when employed as thick sections, provided these steels had been smelted as "fine-grained steels." The testing to fine grain is effected according to the method of Ehn. Such steels are called fine-grained steels, which at the cementation test by Ehn show a grain size in the class 5 to 8. The improvement of the physical properties of the steels for building purposes, especially their favorable behaviour at the testing of the notch strength and at the weld caterpillar bending test, occur fundamentally in all the instances, in which the metallurgical treatment of the steel has been carried out so that a fine-grained steel is produced. It has further been ascertained that it is immaterial, in which manner the fine-grained steel has been produced, be it for instance by special carrying out of the boiling period, be it by smelting overheating, be it by addition of aluminium or by special alloying.

A particularly extensive improvement of the notch test as well as of the behaviour at the weld caterpillar bending test takes place if these fine-grained steels are submitted to a normalising reheating or to a heating above A_{c3} and to subsequent accelerated cooling. Also the refining treatment causes in these fine-grained steels a considerably stronger improvement of these properties than is the case with coarse-grained steels.

Example

50 mm. thick sections, steel for building purposes *St* 52, analysis:

C	Si	Mn	Cr	Cu
Per cent 0.18	*Per cent* 0.43	*Per cent* 1.08	*Per cent* 0.35	*Per cent* 0.45

		Ehn grain-test	Noteh test strength at DVMR test from the core of the section	Bending angle weld eaterpillar bending test 50 mm
			Mkg/cm²	*Degrees*
1	Steel for building purposes of usual manufacture Rolling state.	Class 2	4	8
2	Steel for building purposes smelted as fine-grained steel Rolling state.	Class 6	10	12
3	Steel for building purposes as fine-grained steel obtained by smelting, normally reheated.	Class 6	16	25

These examples show, that it has been possible to produce welded building elements from steels for building purposes which, also in thick dimensions, show excellent properties down to the core as regards notch test strength and bending test. By the employment of steels for building purposes according to the invention it is possible to produce large welded building elements with employment of heavy rolled sections. The employment of heavy sections is more economical than the putting together of heavy girders from thin individual lamellae. It is advisable, to make use of the invention at the production of welded building elements from sections with more than 25 mm. thickness.

ROLAND WASMUHT.

Published May 11, 1943

Serial No. 304,428

ALIEN PROPERTY CUSTODIAN

METHOD OF, AND APPARATUS FOR, STERILISING ORGANIC OR SYNTHETIC MATERIALS, ESPECIALLY CHIRURGICAL SEWING THREADS

Bernd Braun, Hans Veit and Fritz Hammer, Melsungen, Germany; vested in the Alien Property Custodian

Application filed November 14, 1939

Organic or synthetic substances and materials which cannot be sterilised by water or steam from water, especially chirurgical sewing threads, have been sterilised up to now in the majority of cases in a chemical way, in that the respective substances or materials have been subjected to the action of aequeous or alcoholic solutions of chemical bodies said to exert a bactericidal effect. The action of these chemical bodies is due to the fact that they form together with the albuminous bodies, of which the bacteria and the spores consist, compounds which entail dying away of the bacteria and the spores. These chemical methods cannot, however, be employed selectively solely with the bacteria and the spores but they exert an action also upon the chemically very kindred albuminous bodies of the substance or material to be sterilised. When treating the respective substances or materials in a manner suitable to the object in view it is possible to sterilise them, say, for instance, the starting material of catgut, i. e., the submucosa of the mutton gut, in an aqueous solution of iodide of potassium without a far-going chemical change of the albuminous bodies of the tissue.

In the further working-up of the catgut threads made of that sterile material and transforming them into the usual commercial packages it is, however, extraordinarily difficult to protect them from a re-infection and to kill by an after-sterilisation in an alcoholic solution the air bacteria, especially the spores thereof, which have found access to them by the indispensably necessary manipulations. Treating the threads with an aqueous solution is out of the question, as the catgut threads swell in such a solution already after a short time of storing and lose thereby their shape.

It would be possible to attain sterility by a suitably high concentration of the chemical agents and a suitably long period of action of the same, but that would entail also such a chemical change of the albuminous bodies of the catgut that the tensile strength thereof would be reduced very considerably, in such a degree, that the threads would become practically useless.

In order to remove this uncertainty as to the sterility it has been endeavored to effect the sterilisation in a physical manner by rendering the catgut sterile by means of heat. As, however, at that temperature at which absolute sterility is warranted again the tensile strength of the catgut is impaired in consequence of its chemical consistency, it has again been endeavored to heat it in high-boiling anhydrous liquids, such as toluol, xylol, cumol, and the like, but also these methods entail likewise a reduction of the tensile strength of the catgut and can be carried out only if the catgut has been deprived of its entire content of moisture prior to that treatment.

Thus, sterility and tensile strength have up to now been two conditions contradicting one another. Another way to sterilise catgut has been the use of gases exerting a detrimental effect upon the breathing ferments of the bacteria and of the spores and killing them thereby without, in fact, reducing the tensile strength of the catgut threads. As it is, however, on the one hand, possible that spores are present also in the interior of the dried threads and cannot, therefore, be killed by the respective gases, and as, on the other hand, some of the gases suitable for the purpose in view are highly poisonous, also this method of sterilising has been abandoned.

It has, furthermore, been suggested to sterilise the catgut in vapors produced from a mixture of alcohol and phenol in the proportion of 10:0.5, but as the boiling point of phenol lies at 182° C and, therefore, the heat requisite to evaporate it is such at which the tensile strength of the catgut is again reduced and, besides, also the sterilising effect of such a mixture is not strong enough to kill the several sorts of bacteriae, especially the spores thereof, present in the raw gut, also this procedure could not be successful. Besides, the apparatus designed for carrying out that procedure has been proved as unsuited, in that a part of the condensed vapor could drop down upon the catgut whereby certain portions in the same were rendered fragile by reason of the non-uniform action of the vapor as such and of the drops formed by the condensed vapor.

Counter to all known methods of sterilising chirurgical sewing threads the present improved method is chiefly characterised by the feature that the substance or material to be sterilised is subjected to the action of a continuous current of vapor formed by volatile organic compounds, especially halogenised, nitrated or/and sulphurised ones. These organic compounds, as, for instance, methyl-iodide or ethyl-iodide, have in vaporised state such a high bactericidal effect that sterilisation can be effected not only in their pure atmosphere, but also in a mixture thereof with, or solution in, other organic solvents in a certain distinct concentration, for instance 96%-ethyl alcohol.

In a suitably designed apparatus the vaporised sterilising agent can be condensed by return-cooling and be thereafter again vaporised so that

it flows in a circuit, its efficiency is increased and the operating costs are reduced.

For determining the effect of the sterilisation carried out in the just mentioned manner, silk threads have been infected with a mud of highly resistent garden soil whereafter they were subjected to the action of the sterilising agent. In a bacteriologic examination 14 days after the incubation in an aerobic and an anaereobic broth no growth could be ascertained.

The height of the temperature used while carrying out the process with a normal content of moisture in the catgut threads should, according to experience, not exceed 70° C. in order to prevent a reduction of the tensile strength of the threads. If the catgut threads are more strongly drained prior to the sterilisation, higher degrees of temperature (up to 150° C.) can be employed, but in this case the completely brittle threads must be immersed in a 90% alcohol so as to give them again the normal content of moisture. To generate the vapor, preferably volatile organic compounds are used, the boiling point of which remains within admissible limits, but it is, anyhow, possible to make use also of compounds having a higher boiling point, provided, the pressure within the apparatus is reduced, as is, therefore, also the boiling point of the respective organic compound, so that also in this case the higher temperature cannot exert any detrimental action upon the tensile strength and the elasticity of the catgut. Owing to this uniform manner of treating the material at a moderate temperature the threads become softer and more supple than has been attainable with the sterilising methods known up to now. According to the present improved method not only raw catgut or preliminarily sterilised catgut can be securely sterilised, but also heat-proof materials, such, for instance, as silk, thread or twine and synthetic sewing materials. Furthermore, laminaria pins and animal bladders per se and in finished packs enveloped with paper or enclosed in glass tubes can be securely sterilised and finished, the invention presenting, therefore, obviously a highly improved method warranting sterile packing of the sterilised materials.

Two constructional forms of apparatuses for carrying out this improved method are illustrated diagrammatically and by way of example on the accompanying drawings, on which Figure 1 is a vertical section through the one of said apparatuses and Figure 2 is likewise a vertical section through the other thereof.

Referring to Fig. 1, 1 denotes a vessel consisting of glass and containing the evaporable liquid sterilising mixture. Above the vessel 1 is a receptacle 3 likewise consisting of glass and containing the substance or material 4 to be sterilised.

The vessel 1 and the receptacle 3 are connected with one another by a tube 2. On the top of the receptacle 3 is an S-shaped tube 5, the upper end of which terminates in a return-flow cooler 6. From the lowest portion of the tube 5 extends downwardly a pipe 7, by which the liquid collecting in the cooler 6 is conducted back into the vessel 1. Another return-flow pipe 8 extends downwardly from the bottom of the receptacle 3 likewise into the vessel 1.

The receptacle 3 is surrounded with an electric heating jacket 9 for heating said receptacle and its contents, and also the vessel 1 and the contents thereof can be heated by an electric heating plate 10. We wish it, however, to be understood that also any other heating means, for instance a gas-heated water-bath, can be used instead of said plate 10.

The vessel 1 is closed by a stopper 13 through which pass the tube 2 and the pipes 7 and 8. From the tube 2 extends laterally a pipe 12 provided with a cock 11. The lower ends of the pipes 7 and 8 are bent upwardly so as to prevent the vapor produced in the vessel 1 from passing into said pipes. The tube 2 is assumed to consist of a piece of rubber-hose drawn at its ends upon short branches (not shown) provided at the vessel 1 and the receptacle 3. This piece of rubber-hose may be interiorly stiffened by a piece of glass tube (not shown). Anyhow, also the tube 2 may consist of glass and a shut-off cock (not shown) may be inserted thereinto below the place where the pipe 12 is branched off. Also the pipes 7 and 8 may be provided with such cocks (not shown).

The practical employment of the apparatus is about as follows: About 200 ccm of ethyl-iodide are introduced into the vessel 1 together with about 5 liters of 96%-ethyl-alcohol or another, easily boiling, liquid substance and the mixture is then heated until it evaporates. The vapor escapes through the tube 2 into the receptacle 3 and penetrates therein the material 4 to be sterilised. Then the vapor passes through the tube 5 into the cooler 6 from which the condensed steam flows back into the vessel 1 through the tube 7. Condensed vapor forming in the receptacle 3, for instance, at the commencement of the sterilising procedure passes likewise into the vessel 1 through the pipe 8.

When the material 4 has been subjected to the action of the vapor for a sufficiently long time, the tube 2 is closed. If this tube consists of rubber, closing the passage can be effected simply by a clamp or the like. Now the cooler 6 is removed and instead of it an air-filtering device (not shown) is connected up to the tube 5. Now the cock 11 is opened and a vacuum pump or the like is connected up to the pipe whereby the receptacle 3 will be evacuated. At the same time sterile air flows through the above-mentioned filtering device into said receptacle and penetrates into and through the material 4. This procedure is repeated until the material 4 has been completely freed from the smell of the sterilising agent, whereafter the packs can be closed and made ready for despatch.

Referring now to Fig. 2, 14 denotes the vessel containing the sterilising agent and 15 is a vat containing glycerine and being heated by an electric heating shell 17 whereby also the sterilising agent will be heated. The temperature of the glycerine bath can be read at a thermometer 18 inserted into a circuit comprising, besides said thermometer, also the thermic regulator 21 and wires 19 and 20, as shown. The regulation is such that the sterilising liquid is continually kept at boiling temperature.

The vessel 14 is closed air-tight by a stopper 23 through which passes a tube 24, as well as a pipe 25 provided with means for shutting it and serving for introducing the sterilising agent into the vessel 14 and withdrawing it therefrom, and a pipe 26 which is more fully dealt with hereinafter.

The vapor generated in the vessel 14 rises through the tube 24 into the receptacle 23 which is closed by a removable cover 27 and contains the material 28 to be sterilised. This material is supported by a grate 29 supported in turn by a ring 30 preventing the vapor from streaming

along the inner wall of the receptacle **23** so that it is compelled to pass through the material **28** over the entire sectional area of the same.

Into the cover **27** is inserted an outlet tube **32** and held fast therein by a stopper **31**; into said tube extends a thermometer **33** which is retained in place by means of a stopper **34**. The thermometer is inserted into a circuit comprising a thermic regulator **37** and wires **35** and **36**, of which the wire **35** is connected with said thermometer and the wire **36** with a heating wire **38** embedded in the wall of the receptacle **23**. The regulation is effected in this way so that the temperature of the vapor streaming through the receptacle **23** is maintained at such a height that condensation of the vapor within the receptacle is prevented.

The outlet tube **32** is connected with a vapor return pipe **39** to which is connected up a cooling device **40**, a short pipe **41**, another cooling device **42** and a pipe **26** which extends down into the vessel **14** and leads the condensed vapor back into said receptacle. The cooling devices are preferably formed by bulged portions **40** and **42** of the pipes passing through them and by casings enclosing said bulged portions and being connected up to water pipes **43** and **44**. Between the two cooling devices is inserted a cock **45**, and between this cock and the cooling device **42** there is established, by a short pipe, a communication between the pipe **41** and a small vessel **46** to which a small filtering device **53**[a] is attached. The two branches extending from this device are provided with cocks **47** and **48**. The cock **45** is open while the sterilisation procedure is going on and the cock **47** is closed during this time. The vessel **46** serves for making tests as to the chemical composition of the condensed vapor which finds access into said vessel when both the cocks **47** and **48** are open, the condensed vapor being then drawn off through the device **53**[a] in filtered state. It is not necessary to interrupt the sterilisation procedure during this time.

The pipe **41** is also connected with a pipe **49** establishing a communication between the pipe **41** and some means, especially a vacuum pump, for producing an air-pressure below atmospheric pressure so as to render possible the employment of a liquid organic compound, the boiling point of which is higher than admissible for the material to be sterilised, and to reduce, thus, the temperature of the vapor to a degree not detrimental to that material. The measure of the reduction can be adjusted by a pressure regulator **50** connected up to the pipe **49** by a pipe **50**[a] into which a filtering device **53**[b] is inserted. The height of the reduced pressure can be read at a pressure gauge **51** connected up to the pipe **39**. Besides the regulation made possible by the pressure regulator **50**, a fine regulation is made possible by a lipped valve **52** located in a filtering device **53**[c]. The three filtering devices are able to free the eventually entering air from bacteria carried along with it.

When the sterilising procedure has been finished the sterilised material is dried and freed from the adhering smell of the sterilising agent. For this purpose first this agent is sucked off from the vessel **14** through the pipe **25** whereby any further generation of vapor is prevented and now the filtering device **53**[a] is attached to the small test vessel **46**, the cock **45** is closed and the cocks **47** and **48** are opened. Now the air under reduced pressure will pass from the pipe **25** through the vessel **14**, the sterilised material **28**, the tube **32**, the pipe **39**, the cooling device **40**, and the pipe **49** which is connected up to a vacuum pump or the like, as already mentioned. This last phase of the procedure is continued until the material **28** has been perfectly dried and freed from the smell of the sterilising agent. Finally, the cover **27** is removed whereafter the completely finished material **28** can be withdrawn from the receptacle **23**.

BERND BRAUN.
HANS VEIT.
FRITZ HAMMER.

PUBLISHED
MAY 11, 1943.
BY A. P. C.

B. BRAUN ET AL
METHOD OF, AND APPARATUS FOR, STERILISING ORGANIC OR SYNTHETIC MATERIALS, ESPECIALLY CHIRURGICAL SEWING THREADS
Filed Nov. 14, 1939

Serial No. 304,428

2 Sheets-Sheet 1

Fig. 1

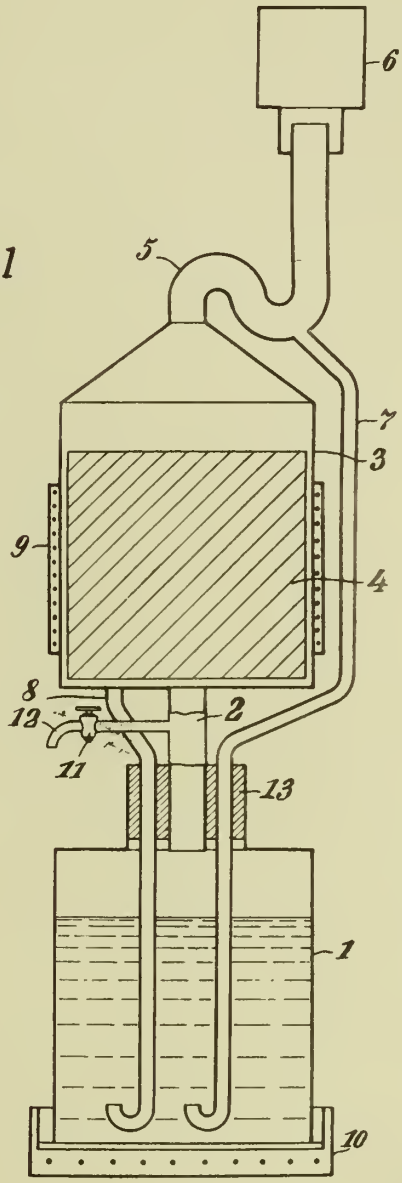

Inventors,
Bernd Braun,
Hans Veit,
and
Fritz Hammer,
by Francis A. Appleman,
Attorney.

PUBLISHED
MAY 11, 1943.
BY A. P. C.

B. BRAUN ET AL
METHOD OF, AND APPARATUS FOR, STERILISING ORGANIC OR SYNTHETIC MATERIALS, ESPECIALLY CHIRURGICAL SEWING THREADS
Filed Nov. 14, 1939

Serial No. 304,428
2 Sheets-Sheet 2

Fig. 2

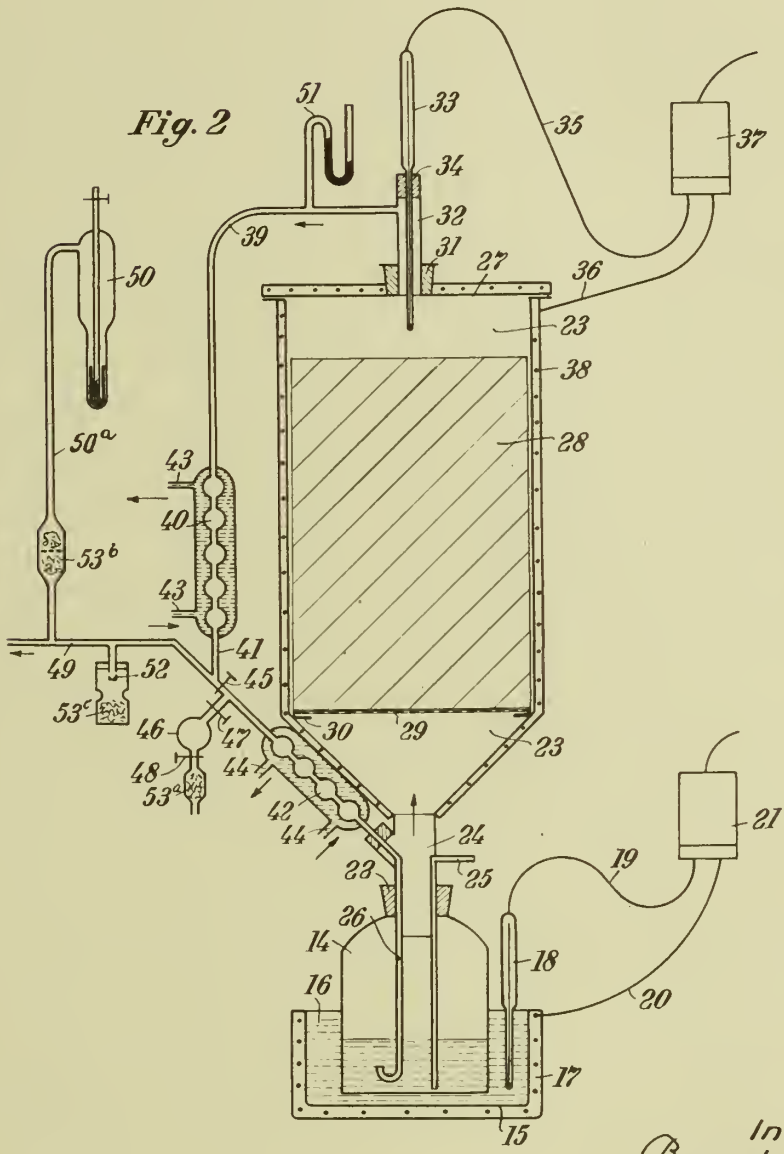

Inventors,
Bernd Braun,
Hans Veit, and
Fritz Hammer,
by Frank S. Ackerman,
Attorney.

Published May 11, 1943

Serial No. 305,404

ALIEN PROPERTY CUSTODIAN

PROCESS FOR SIZING OF FIBROUS MATERIALS

Rudolf Anton Hirsch, Vienna, VII, Germany; vested in the Alien Property Custodian

No Drawing. Application filed November 20, 1939

This invention relates to the sizing of fibrous materials such as threads.

As raw threads lack the necessary strength to resist the mechanical strains to which they are subjected in weaving looms, they are sized before weaving. This sizing consists in impregnating the threads with an adhesive liquid which is not removed until after weaving.

The present invention relates to an improved process for the preparation of a sizing liquid of this kind. On going into a sizing shop, one notices a white deposit beneath the sizing machine which is a result of fraying or of the shedding of certain additional weighting substances.

This fraying occurs when the fibres adhering to the thread do not lie close to the threads but become friable as a result of excessive drying and fall away at the first contact with a mechanical resistance. The goods thus suffer not only a loss in weight but an increase in the roughness of the outside of the thread. The shedding of weighting substances occurs when the sizing fluid is not homogeneous, does not adhere to the thread in the dry state and consequently does not serve its purpose.

The hitherto known sizing products have also other disadvantages. The usual fecula sizes are not made sufficiently homogeneous by employing the hitherto known products. They do not keep and they often give off an odour which is objectionable to the workman.

All these disadvantages are overcome by the sizing process according to the present invention, which may be applied to all industrial processes which require a size for glueing down fibres, which otherwise have a tendency to fray or fall off, and in particular to those processes which include smoothing and calendering, or the like while applying heat; that is, operations such as ironing, polishing and varnishing, which are employed in bleaching and in the manufacture of certain so-called bedded papers or cardboard.

The process according to the present invention consists in its essentials in using for the production of fecula, or the like, a homogeneous mixture of a caustic base in an aqueous solution and polyvalent alcohols such as glycerine. If this mixture is employed, the fecula, or the like which is used for making the size, may be weaker than that used hitherto. At the same time, the process results in the production of a size which is more powerful and which leaves the threads more flexible. Fraying and the shedding or the loss of weighting substances are almost entirely prevented.

Thus with more economical means a better product is produced. Still better results are obtained by adding a softening agent or a fatty solvent. The following are examples of the process.

Example 1

In preparing a sizing product for treating threads and fabrics, the following mixture may be used:

	Grams
Caustic soda of 40° Bé	60
Glycerine	40

or alternatively

	Grams
Caustic soda of 40° Bé	60
Glycerine	39.5
Methyl-glycol (or of Igepont T)	0.5

The proportions may vary within a fairly wide range according to the rapidity of drying which is required or according to the fibre to be treated. With 60 grams of caustic soda, the quantity of glycerine used may vary between approximately 8 grams. On the other hand, the caustic soda may be replaced by any other caustic alkali such as potash or the caustic alkali carbonates.

The sizing product is thus prepared by mixing approximately 35 kgs of fecula with 600 litres water and 350 grams of a liquid as mentioned above. A certain amount of water may be added. In practice, this process results in a saving in fecula of approximately 20% over the process hitherto used.

This process and product may be applied not only to the sizing of threads, but in all operations in which it is necessary to increase the resistance and elasticity of fibres or threads while at the same time smoothing them in particular for dressing, twisting, polishing or sewing threads, the varnishing of fabrics, and drying.

Example 2

In the case of laundering process, instead of the fecula, the starch usually employed in this industry may be used. It is added to the mixture of caustic alkali and a higher polyvalent alcohol such as glycerine.

The inventor has found a proportion of 1% of this mixture gives satisfactory results. The following proportions are advised:

Starch	grams	400
The mixture of caustic soda and glycerine	do	4
Water	litres	100

It has been found that the use of a starch prepared in this way improves the polish and reduces the temperature to which it is necessary to heat the iron.

When sizing papers, it is preferable to employ the fecula described previously, the proportions of which remain the same.

By "fecula" the inventor means not only feculae from tubercles but also the meals themselves from which feculae are extracted.

RUDOLF ANTON HIRSCH.

Published May 11, 1943

Serial No. 306,031

ALIEN PROPERTY CUSTODIAN

PRODUCTION OF ARTIFICIAL LEATHER

Carl Ludwig Nottebohm, Weinheim/Baden, Germany; vested in the Alien Property Custodian

No Drawing. Application filed November 24, 1939

This invention concerns a process for the production of artificial leather.

It is already known to produce artificial leather by impregnating fibre fleeces, such as are produced for example by carding, with binding agents. The transport and the handling of the fibre fleeces before the impregnation is very difficult as the fibre fleeces are very loose and tender and may easily be damaged in their structure. Such damaged fibre fleeces yield non-uniform products. The impregnation itself becomes difficult as well, especially if impregnation rollers with a higher pressure are used, because the binding agent will penetrate the loose fibre fleeces and thus will cause the fibres to stick to the rollers which are soiled by the binding agent. This again will damage the surface of the fleeces.

When impregnating in a bath one had to shift by leading the fibre fleeces between metal wire nets or sieves. This method, however, does not suit roller impregnation. Neither was it possible to avoid the shown disadvantages by felting the fibrous masses considerably before the impregnation. Hereby a sufficient coherence is produced but the qualities of the artificial leather suffers, as the considerably felted fibrous masses were more difficult and less uniform to impregnate than the loose fibre fleeces.

It has now been found that the shown disadvantages can be avoided by swelling the fibres of the fleeces' surfaces before the impregnation with binding agents by a treatment with solving or swelling agents. Hereby the fibres of the surface are joined so tightly that a resistant layer is obtained which coats the fleece on one side or on both sides somehow like a wide net and thus protects the fleece from mechanical damages and prevents the fibres from sticking to the surface of the rollers.

In carrying out the invention fibre fleeces are employed which were produced from natural or artificial fibres of vegetable or animal origin, for example hemp, flax, cotton, jute, rami, bast fibres, wood fibres, hair, skins or leather fibres, wool, silk, regenerated cellulose, staple fibre, fibres of cellulose esters or ethers and such like. Before being worked up the fibres may be subjected to various known treatments, for example they may be disintegrated by boiling, treated with oxidising or reducing agents or impregnated with wetting agents or mercerised. The fibres, if desired pre-treated, are then passed through a carding machine or like apparatus and are thus worked up into a coherent fleece of more or less considerably felted fibres.

The fleeces thus obtained are now treated with solving or swelling agents for the superficial fibres. Only such amounts of these agents are used which will cause a considerable swelling of the superficial fibres or will bring them to the point of dissolving, which has the effect of an intimate assembly of the fibres.

The solving and swelling agents naturally must be adapted to the nature of the fibre from which the fleeces are obtained. Proceeding from fleeces obtained from vegetable fibres, such as hemp, flax, cotton, jute or rami, primarily a solution of copper oxyde in ammonia is used. The swelling of these vegetable fibres is facilitated by a treatment, by which the fibres are made sensible towards the swelling action, for example by mercerising. During this treatment a splitting up of the micelles and consequently a diminution of the molecules takes place. Fleeces of artificial fibres from regenerated cellulose, for example artificial silk or staple fibre, regenerated from a solution of copper oxyde in ammonia or from viscose solution may be swollen by alkali hydroxyde, for example sodium hydroxyde. Fleeces produced from cellulose, regenerated from nitro cellulose also may be swollen by organic solvents, like acetic esters or acetone. If the fleeces originate from fibres from cellulose esters, for example cellulose acetate or cellulose formate, generally alkali hydroxyde may be used as a solvent. Furthermore organic solvents, such as acetic ester, acetone, formic acid, pyridine, formamid may be used. Also for the purpose of swelling fibres from cellulose ethers, for example methyl cellulose, organic solvents, such as formic acid, ethyl alcohol, benzine and benzenes may be used. Fibres from water soluble cellulose ethers also may be swollen with water.

Albumen containing fibres, such as wool, skin or leather fibre or casein wool may be swollen with alkali lye. Natural silk is swollen with copper oxyde solved in ammonia. Fibres which are produced from skin by swelling and tearing out, such as are described in French Patent No. 764,-642 already may be swollen under the influence of hot water or steam.

After this pre-treatment the fleeces may be dried although the drying is unnecessary, as the fibre fleeces as a rule are not impregnated immediately after the pre-treatment, but are at first rolled up, the solvents evaporating at the same time without difficulty. They are, of

course, regenerated in an apparatus suitable for the purpose.

According to a special embodiment of the invention the superficial layers of the fleece are produced from fibres different from those used for the body of the fleece. For example the fleece may be produced from vegetable fibres, such as hemp, flax, cotton, jute or rami. During its production one side or both sides of the fleece are covered with a superficial layer of acetyl cellulose. The thickness of these superficial layers may be varied. A gauze-like layer, as it is taken from the comb of a carding machine does already suffice. The fibre fleeces thus produced are now treated with solving or swelling agents for the superficial layers. This embodiment is advantageous in so far, as only the superficial layers of the fleeces are wetted by the solving or swelling agents and thus form a protective layer for the fleece itself. According to this embodiment any fibres may be used for the production of the fleece whilst for the superficial layers, especially if they are thin, also more expensive fibres may be used, which are swollen or brought to the point of dissolving by small quantities of solvents or cheap solvents. Preferably artificial fibres, especially acetyl cellulose are used for the production of the superficial layers.

The fibre fleeces pre-treated according to the invention may easily be rolled up or of and transported, the union of the fibres remaining undisturbed. The impregnation of the fibre fleeces on one or on both sides may be effected between rollers or by immersion in baths. Fleeces which have been coated only on one side with a protective layer are impregnated on the unprotected side. It is of great advantage to impregnate two or more fleeces simultaneously by leading the fleeces between rollers and introducing binding agents between them. If one side protected fleeces are impregnated that way they are thus lead between the rollers that the protected sides face the rollers while the fleeces are assembled with the other sides. The impregnation may be effected by one of the applicant's prior processes according to patents . . . . . (U. S. Applications S. N. 192,893 and 202,136).

A great variety of binding agents may be used for impregnation. As natural binding agent rubber may be employed, as synthetic binding agent use is made of artificial phenol or urea resins, polymerisates of unsaturated organic compounds, in particular polyvinyl compounds, polyacryl compounds, polystyrenes and also rubber-like polymerisation products of unsaturated hydrocarbons. If desired, mixed polymerisation products, for example of vinyl chlorides with vinyl esters or other polymerisable substances, having an olefine double bond, for example unsaturated hydrocarbons are employed. A solution of the binding agent in organic solvents may be used. The best results are obtained by employing aqueous emulsions or suspensions, for example natural or artificial latices.

By the pre-treatment according to the invention the tearing and damaging of the fibre fleeces as well as the sticking of the fibres to the surface of the roller is avoided even at a high pressure of the rollers.

The further treatment of the impregnated products is effected in usual manner by aid of drying, pressing, calendering and dressing. It was found that the structure of the superficial layers obtained from fibres, which are soluble in the solvents of the lacquers, often is advantageous for the process of lacquering, during which a swelling of the superficial fibres is effected, whereby an intimate bond of the fibre is attained. The fibrous character of the surface of the impregnated products becomes more or less blurred in proportion to the degree of swelling. The swollen outer fibre layer may easily and intimately be joined with the inner layers by consecutive calendering. The obtained products excel in a smooth surface.

CARL LUDWIG NOTTEBOHM.

Published May 11, 1943

Serial No. 306,501

ALIEN PROPERTY CUSTODIAN

MANUFACTURE OF MULTICELLULAR GLASS

Bernard Long, Paris, France; vested in the Alien Property Custodian

No Drawing. Application filed November 28, 1939

The present invention relates to the manufacture of so-called multicellular or foam glass.

For manufacturing such a glass, it is known to create bubbles by the formation of gas in the body of a mass of glass taken in the liquid state or in the powdered state. This evolution of gas is produced at a suitable temperature for the glass to possess an appropriate plasticity, that is to say that said glass must not be too fluid, so that it retains, in its mass, the bubbles formed, and that on the other hand it must not be too viscous in order not to obstruct the free formation of said bubbles.

One of the desirable qualities for such as glass consists in its lightness and the same is obviously directly proportional to the intensity of the evolution of gas.

The purpose of the present invention is precisely to raise this evolution of gas to a high degree of intensity and it consists in obtaining all or part of said evolution by means of reactions which, at the temperatures at which glass welds to itself, produce a gas and simultaneously liberate a substance having a high vapour tension.

According to a particularly advantageous embodiment of this process, the reaction used for causing simultaneously an evolution of gas and the liberation of a substance which has a high vapour tension at the temperature in question, consists in the reduction of an oxygenated compound of such a substance.

Among these substances may be mentioned, in particular, arsenic, cadmium, zinc, antimony, lead, etc. The reduction of the oxygenated compounds of these substances may be effected by means of carbon or coal.

Thus for example in the case of arsenic, the following reaction are effected:

$$2As_2O_3+3C=3CO_2+2As_2$$
$$2As_2O_5+5C=5CO_2+2As_2$$

With the other substances mentioned, the reactions used would be similar.

It may be considered that the considerable swelling that has been observed is due to the fact that the simultaneous presence, inside each of the bubbles, of a gas such as CO_2 and of a vapour such as that of arsenic, has the result of favouring the change of the said substance into the state of vapour, that is to say of influencing the production of vapour of said substance according to a phenomenon which may be compared to that of the boiling of liquids containing dissolved gases. In particular, if the substance liberated possesses, at the temperature of treatment, a vapour tension which is approximately that of atmospheric pressure, the presence of a gas in the various bubbles that are produced by the reaction may effect the complete conversion of said substance into its vapour.

Said conversion will be better effected as the quantity of the gas evolved is greater. Consequently, and considering the above reactions by way of examples, it is observed that it is advantageous for the substance with a high vapour tension to be liberated from an oxide which is in the most intense state of oxidation. In particular, in the case of arsenic, it is advantageous for the oxygenated compound to be taken in the pentavalent state. In order to obtain this result, known means may be used, for example the addition of oxidizing compounds of manganese, such as manganese dioxide, manganates and permanganates, etc.

For the same purpose, it is recommended to produce the glass, which is intended to be used for the invention, by means of an oxidizing fusion.

The incorporation, in the vitreous material, of the elements—oxygenated compounds, reducing substances—required for the reaction, may be effected in different forms and by any appropriate means.

It is possible, for example, to introduce and disperse said elements in a vitreous material, after same has been brought to the liquid state.

It is also possible to mix them directly, in the powdered state, with glass likewise in the powdered state, and then bring the mixture to a high temperature.

It is further possible to incorporate said elements independently, for example by previously preparing a glass containing the oxygenated compound, then crushing the glass, mixing it with the reducing substance in the powdered state and finally raising the mixture, as in the previous case, to the high temperature at which glass welds to itself.

This latter method of operating offers the advantage of retarding the start of the bubble-generating reaction until the instant when the glass has acquired a certain degree of fluidity and consequently begins to come into intimate contact with the reducing powder. The generation of the bubbles therefore only occurs at the instant when the glass has precisely reached the state of plasticity that is suitable for the formation of multicellular glass.

By applying this method to the case of arsenic, I have found that it is possible to use

doses of arsenious anhydride varying between one and five parts to one hundred parts of sand.

In this same case, the dose of manganese compounds will be so adjusted that at the end of the fusion for preparing the glass, same will have a slight pink colour.

Glass containing large doses of arsenic has enabled me to obtain readily plates of multicellular glass having a regular structure, middle sized pores, of 0.15 apparent density. It has also been possible to obtain densities of 0.12 and 0.10.

On the other hand, as mentioned above, it is possible to incorporate the oxygenated compound in the form of a powder containing the carbon and prepared beforehand, said powder being then intimately mixed with the glass powder. This method of carrying out the process is particularly advantageous because it enables use to be made, for the glass powder, of a glass of any nature which is obtained for example from products called "cullet" or waste scraps of ordinary glass.

For example, a powder of ordinary glass, to which is added a mixture of 0.3% of carbon powder and of 2% of arsenious anhydride As_2O_3, enables a multicellular glass having an apparent density of 0.20 to be obtained without difficulty. In practice, the doses of carbon powder may vary between 0.2 and 0.5% approximately and the doses of arsenious anhydride between about 0.5 and 5%.

In the practical application of the invention, account must be taken of the degree of the vapour tension of the substance liberated, at the temperature at which the vitreous mass reaches the suitable state of viscosity for swelling or foaming.

According to the invention a composition will be chosen for the vitreous material, which produces a glass, the softening point of which will be higher as the substance to be liberated requires a temperature which is itself higher for developing an efficient vapour tension. Thus, in the case of antimony and of lead, care should be taken that the composition of the glass is such that the state of viscosity suitable for foaming is only acquired by said glass above about 1100° C., which will lead to the use of special so-called high softening point glass.

On the contrary, such a precaution is not necessary when the substance liberated is, for example, arsenic, owing to the fact that the vapour tension of this substance is already considerable above 300° C. and that between 700° and 900° C. ordinary glass acquires the suitable state of viscosity.

The same applies to the use of the oxygenated compounds of cadmium and of zinc, although in these two cases it is advantageous to choose a glass whereof the softening point is higher than in the case of the oxygenated compounds of arsenic.

BERNARD LONG.

Published May 11, 1943

Serial No. 308,213

ALIEN PROPERTY CUSTODIAN

METALLIC SAW BLADE FOR SAWING STONE, MARBLE PLATES AND THE LIKE FROM STONE BLOCKS

Franco Bandini, Rome, Italy; vested in the Alien Property Custodian

Application filed December 8, 1939

The present invention relates to a metallic saw blade for sawing stone, marble plates and the like from stone blocks.

The process now used for sawing into plates stone blocks utilizes the abrasive power of the siliceous sand or similar products which by means of blades moving horizontally and alternatively is brought to rub against the block to be sawed.

This process is slow and requires a dear and encumbrous installation.

According to the present invention these inconveniences are removed owing to the fact that for sawing plates from stone blocks an analogous system employed as for sawing planks from trunks of trees comprising substantially a toothed blade tended in the form of a ring between two fly wheels performing a rotary motion. By advancing the trunk against the edge of the toothed blade the teeth of the same cut the wood.

Such an arrangement is obviously not directly applicable to cutting stone since the teeth would be immediately put out of service as soon as they come into contact with the stone. A convenient shape has been consequently thought out and provided for the blade exhibiting rectilineal and hollowed parts, so that in the functioning operation the abrasive is gathered in the concavities of the blade and entrained by this blade in its motion so that the cutting of the stone may take place.

By way of example a form of realisation of the invention is illustrated in the accompanying drawing in which the only figure provided shows the profile of a metallic sawing blade according to the invention.

As shown in the drawing the body **1** of the blade shows on one side plane parts **2** and hollowed parts **3**, the ones succeeding to the others. In the form illustrated the hollowed parts have a semicircular shape, but it is understood that this shape may be conveniently shaped always according to the fundamental idea of creating in the blade spaces which may gather the abrasive and convey it to be inserted between the same blade and the stone to be cut.

Both sides of the sawing blade may be equally shaped.

Instead of a single blade two may be employed overlying and in contact to one another preferably with the cavities staggered.

The present invention has been illustrated and described in a preferred form of realisation but it is clear that constructive changes may be practically introduced therein without surpassing the limits of protection of the present industrial patent.

FRANCO BANDINI.

PUBLISHED

MAY 11, 1943.

BY A. P. C.

F. BANDINI

METALLIC SAW BLADE FOR SAWING STONE, MARBLE PLATES AND THE LIKE FROM STONE BLOCKS

Filed Dec. 8, 1939

Serial No. 308,213

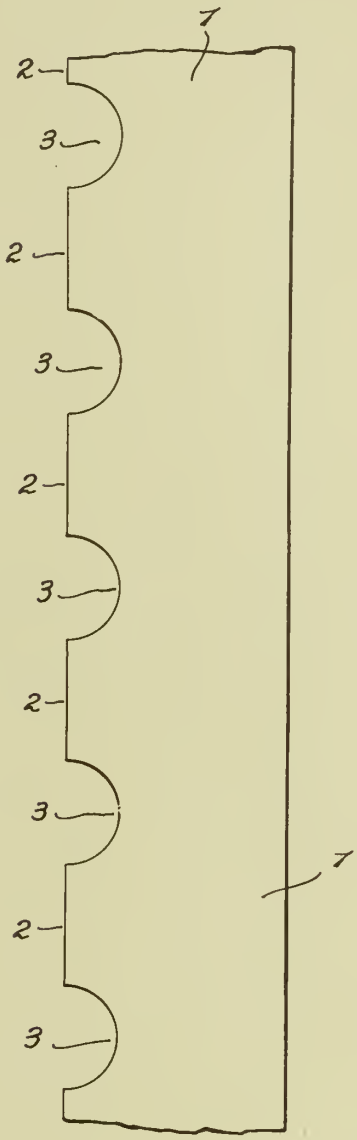

Franco Bandini
INVENTOR
By [illegible]
his Atty.

Published May 11, 1943

Serial No. 308,380

ALIEN PROPERTY CUSTODIAN

METHOD OF CHANGING THE PHYSICAL AND CHEMICAL PROPERTIES OF THE SURFACE OF OBJECTS OF SILICIOUS MATERIAL

Edwin Berger and Harald Schäfer, Jena, Germany; vested in the Alien Property Custodian

No Drawing. Application filed December 9, 1939

It is a well known fact that the behaviour of the surface of a glass object can be quite different from that of the glass beneath, as is proved, for instance, in the case of fresh fractures. This difference very often obtains when the surface is not coated with a layer of glass of another composition or origin, or with varnish, resins or other suitable material. After a short time, the action of water on a surface of fracture has gone far to remove the alkali of the glass and to thus create a very thin hydrolized surface layer which is poor in alkali and retards further attacks by water. To increase the effect of this retardation, the suggestion has been made to submit glass objects to prolonged boiling in water or to treat them with acid solutions, hot acid, for instance sulphuric acid, or with acid vapours. Experience has proved, however, that permanent protective layers cannot be obtained in this manner, to say nothing of the fact that acid solutions strongly attack many glasses, lay open polishing scratches and entail roughness and other irregularities of the surface. The produced hydrolized, i. e. gelatinous, surface layer, which is richer in silica, obviously remains pervious to water. It is more vulnerable mechanically, ultimately changes and, especially when heated to over 100° centigrades, becomes chinky and porous, thus preparing the way for further attacks.

It is also known that the permanence of the resistance of glass surfaces can be further improved by the influence of acid gases for instance at the softening temperature of the glass in question, obviously because of a fusing of the gelatinous surface layer, which is richer in silica. The use of this proceeding is restricted, however, since the necessary heating to near softening temperature entails in the glass surface and the glass deformations and other changes which, to say the least, render their use for instance for optical lenses or prisms more difficult. This proceeding is also precarious on account of the alkali showing near the said softening temperature a tendency to travel and, accordingly, to penetrate into the surface layer and to thus reduce the achieved improvement more or less.

According to the invention, an effective and permanent improvement of the surfaces of glass and of those of other silicic, i. e. ceramic, objects as well as other important technical changes as to physical and chemical properties can be arrived at also at temperatures considerably below that required for softening (as a rule below 400 centigrades) by adopting the following three measures. The surface of the object to be treated is coated with a lixiviated layer; substances containing hydrophobe groups are introduced into this layer; and the structure of the surface is made to close and solidify by interior changes. The new method can be carried into effect especially by causing the object to be treated to react at a temperature below its melting point in consequence of exposure to acids and substances containing hydrophobe groups.

Providing a lixiviated layer on the surface to be treated is effected either by lixiviating this surface or coating it with a gelatinous layer of, for instance, water-glass. A lixiviation of the surface does not require the object to consist of components which are easily soluble and components that can be less easily dissolved. Prolonged watering can produce, for instance also on quartz, a similar surface, which can be proved by the absorption effect with respect to, for instance, certain pigments. The entire body need not naturally consist uniformly of the material to be treated in the above-described manner; it may be for instance of a non-silicious material coated with silicious material. On the other hand, the object can be at the outset entirely of a material which, in the sense of the invention, is to be considered as lixiviated. For instance the narrow free edge of the water-glass layer by means of which two glass objects are cemented to each other can be rendered more resistant by introducing substances that contain hydrophobe groups and solidifying this edge.

By substances containing hydrophobe groups are to be understood materials that dissolve in water either not at all or only to a very slight extent, as for instance grease, oil and other hydrophobe carbohydrates, sebacic acid etc.

The aforesaid three measures can be taken simultaneously or subsequently to each other. The lixiviation can take place at the same time as the treatment with substances containing hydrophobe groups. It is also possible, however, to begin with producing the lixiviated layer, to expose the object to substances containing hydrophobe groups and, finally, to effect the solidification.

In general, a lixiviation of glass objects by acids (excepting fluorhydric acid) is to be preferred to that by means of water, since acids attack also the bivalent oxides and thus produce such a structure of the surface as is looser and more receptive of the hydrophobe substances. By a milder or a protracted lixiviation, a suitable surface layer is obtained even when the objects to be treated contain only as small a percentage of silicia as 0.1%.

Paraffins, stearic acid, oleic acid and other hydrophobe substances with a high boiling point have proved to be very suitable. If polished or non-prepared glass objects are heated in these substances, in the presence of acids, water adheres to these objects either only with difficulty or not at all, even subsequently to cleaning, prolonged boiling in grease-dissolving substances, or

after treatment with other kinds of otherwise dissolving substances. This condition cannot obtain when the objects are merely smeared over with such materials and then cleaned. The process taking place is probably as follows. Similarly to the action of watery acid solutions, that of acids produces a surface layer which is rich in silicic acid and perhaps gelatinous, whereupon this layer is penetrated by the hydrophobe substance, modifies at the temperature required by the treatment and solidifies, thus preventing the hydrophobe substance from being dissolved.

Means for changing the structure of gelatinous layers by interior modifications in such a manner that this structure closes and solidifies are known. The most simple means is heat. It is also possible, however, to use in the new method other proceedings of any, for instance electric, kind which effect interior modifications of the gelatinous part and the solidification thereof.

The most simple manner of carrying the new method into practice consists in immersing the object to be treated into a bath which contains acid and hydrophobe groups and has a temperature below that at which the object begins to soften. As the possibilities of chemical attacks on the object are very different, depending as they do on the composition of the object, and as the resulting surface layer is prone to modify and solidify more or less easily, according to its content of gelatine-forming agents, the most suitable composition of the bath, the height of the temperature and the duration of the exposure are very different. In general, the lixiviation will have to be the stronger and the temperature the higher, the more silica or other gelatine-forming agents are contained in the glass. Good results can be obtained in most glasses for instance with paraffin substances containing oleic, stearic or other acids and at temperature above 100 centigrades. Half an hour of exposure at approximately 200 centigrades may do eventually. A treatment with hydrophobe substances which are completely acid-free, for instance with specially purified paraffin, is not, however, effective. Many of the substances containing hydrophobe groups do not, however, require a special addition of acid, since they are acids at the outset, or because acid is produced in them at the temperature of the treatment.

The lixiviated layer can be produced before the treatment with the substances containing the hydrophobe groups, this lixiviation being effected by water and watery solutions, for instance by aqueous acid solutions. In this case, it is easier to obtain comparatively thick layers. The effect aqueous acid solutions produce on polished glass objects or the simultaneous presence in the bath of water and acids soluble in water very often entails, however, that polishing scratches are rendered visible. In general, a slight content of water in the bath permits to accelerate the formation of the desired surface layer. Avoiding mineral acids in the water permits the prevention of scratches.

If the hydrophobe substances have been introduced into the surface layer at a low temperature, or if the treatment in the bath has been too short to cause a solidification of the structure of the surface layer obtained, the solidification can be accelerated and completed in air by subsequent heating to higher temperatures. It will be convenient, as a rule, to cause the hydrophobe substance to act above a temperature of 100° or to heat the object ultimately to above 100 centigrades.

It has been proved further that also other substances absorbable on the lixiviated surface layer, for instance organic dying substances, can be lastingly introduced into the surface when they are caused to act during or after the lixiviated layer having been produced, but before solidification. This possibility to introduce such substances can be used for instance also for causing glass surfaces to have special catalytic or fluorescence properties or, generally speaking, to obtain such properties which are not peculiar to the material to be treated.

The objects treated by the described method have in addition to their opposition against adhesion of water, which can be turned to account practically for instance for inactivating and immunizing containers or for influencing condensations on surfaces, a capacity of resistance against attacks by steam or water, acids and weak lyes which is in most cases very pronounced and higher than twice the ordinary resistance. This fact is to be appreciated especially when glasses poor in silica are concerned, which are easily stained, and which are often used for optical purposes on account of their special properties. The new method permits the practical use of glasses that are even poorer in silica than those employed so far, which may not have an SiO_2 content lower than 30%. Exactly these easily stained glasses give a clear idea as to the difference existing between the effect of a mere coating with hydrophobe substances and that of introducing these substances into the surface. Simply coating the glass does not protect from the action of water and acid solutions, in spite of an immunity of the surface against adhesion being ostensibly produced, but merely entails a retardation of this action, in contradistinction whereto glasses treated according to the new method remain unchanged even in the long run.

Hot concentrated lyes and fluorhydric acid, however, noticeably attack even the glasses submitted to treatment, so that the glass substance is not made entirely inaccessible by the protection treatment. It is surely due to this fact that thin glass layers submitted to the method and used for instance in glass electrodes permit the passage of electric current very well in spite of the slight adhesiveness of water. However, the method concerned by the invention permits, on the other hand, to use for the said purposes glasses which are rich in alkali (and may contain even more than 20% thereof) and which are, accordingly, highly conductive electrically and would, if devoid of a protective layer, be attacked very strongly by the solutions to be tested.

The thicknesses the layers are to have in order to afford good protection are very slight in general and in most cases hardly measurable. Thicknesses of few mμ will do. Greater thicknesses influence the reflection capacity, the magnitude of which is determined first of all by the refractive index of the object to be treated. When noticeably thick, the surface layers, which the method has caused to be richer in silica, and which have therefore a lower refractive index, reduce the reflection capacity by interference, it being possible without detriment to largely reduce this reflection capacity at thicknesses of the layer of 100 mμ.

EDWIN BERGER.
HARALD SCHÄFER.

Published May 11, 1943

Serial No. 308,486

ALIEN PROPERTY CUSTODIAN

METHOD FOR JOINTING VENEER BY MEANS OF ARTIFICIAL RESINS IN ALCOHOLIC SOLUTION AND/OR COLLOIDAL AND/OR BY MEANS ARTIFICIAL RESINS SOAP AND VENEER AND PLYWOOD OBTAINED BY SAID METHOD

Rudolf Ludwig, Lissone, Italy; vested in the Alien Property Custodian

No Drawing. Application filed December 9, 1939

The object of the present invention is a method for obtaining veneer joints withstanding the influence of bacteria, moisture, temperature changes, resisting to alcalies and to acids. The invention covers also said veneer and plywood itself.

The present art in jointing veneer sheets knows, barring the skew joints, the metal wire clamps for holding together the veneer sheets, the seams, the cutting out of swallow tails with relative assembling of the veneer sheets, the bonding head to head of the ends of the veneer sheets overlap covered by strips of tissue or paper, cut-out or plain, and finally the spreading with animal glue of the united edges of the veneer sheets.

In this last process, after the glue is dry, the edges of the veneer sheets are moistened, immediately before glueing, with a solution of formaldehyde in order to swell-up like a jelly the dried glue on one hand and on the other hand to hasten, by means of pressure and heat, the setting and the hardening of the glued connection. The heat required for melting and hardening the glue is applied by means of machines of various designs operating either continuously in the direction of the glued joint or intermittently in a direction at right-angles to the direction of said joint by means of heating plates, travelling-bands, chains or plates. The side pressure required for bonding is obtained in the continuous machines by means of friction rollers arranged in pairs, somewhat inclined one towards the other and also to the feeding direction of the veneer sheets.

In the machines operating intermittently, the pressure required for bonding is provided by the friction of the veneer sheets themselves, retained on the heating plates by means of pressure-bars and moving at right angles to the joint to be bonded; or other-wise the two sheets to be jointed are seized directly by four heated bars and transoms being pressed one against the other. Due to the thickness of the sheets of veneer to be glued, which is only a few thousandths of an inch thick and due to their fragility and brittleness, the side pressures, thus obtained do not reach by far the pressures required for bonding with artificial resin glues.

All the methods and machines used to this purpose, barring the tendency of trying to obtain the greatest efficiency at the minimum cost, are designed and achieved, according to the requirements of cabinet-makers, viz. with the idea of avoiding unsightly joints.

When on the contrary, veneer strips are to be employed for external or covering layers by glueing them according to the method stated above, for technical wood-construction which have to undergo very high stresses, as for instance in veneer plywood sheets for airplanes or plywood for propellers or plywood for transoms, gear-wheels, dies and angle joints for wooden frames, the result is generally unsatisfactory so as to compel the user to use only whole veneer sheets without joints.

Therefore, for instance in most of the tender rules for the manufacture and inspection of plywood sheets for airplanes, it is forbidden to use veneer sheets with joints on the face and back layers.

But in order not to render impossible due to said rules the use of back veneers exclusively without joints or defects, in the manufacture of plywood sheets for airplanes, it has been found necessary to allow for knots or other defects up to a certain limit and to reduce on the other hand the minimum dimensions of the finished sheets to 1 x 1 meter.

If in some specifications for the inspection and reception, it may be allowed to accept veneer with joints, under certain restrictions, it cannot be denied that all the joints of veneer in the assembled plywood, bonded with a film of artificial resin, become joints of least resistance to mechanical stresses upon the sheets, and also to the influence of bacteria. This is one of the main arguments of the promoters of all-metal plane designs against the use of wood arguments, in which all the other advantages of the wood constructions are forgotten or neglected, namely: lower cost, simpler construction, easier repairs of the planes and finally the elasticity of the wooden frames reacting right to the limit breaking stress. When the glueing of the single layers one upon the other, is made, with fluid artificial resins or soap-solutions of the same the spreading on the veneer edges is made during the spreading on both sides of the artificial resins solutions on the veneer strips also of the inner layers themselves and the tight bonding of the veneer strips one with the other is no more necessary, as usual with any other bonding of plywood with fluid glues.

In the following phase of the bonding operation under pressure in the glue hot-pressing machine, the dried films of artificial resin acquire new plasticity and fill-up all eventual joints which do not close perfectly, binding the plywood edges and converting the resin to the irreversible state.

This process is however not applicable in the

manufacture of cover-sheets made out of strips bonded with artificial resins. For such a manufacture it is however indifferent to bond the single layers with a film of artificial resin at a later period of phase of manufacture or by spreading directly the resin solutions.

A spreading of artificial resin or of resin soapy solutions thereof on the veneer edges and the use of any of the known machines for obtaining a veneer bonding joint with an artificial resin is not a possible proposition, as, barring the higher temperature and compression pressures required for obtaining the setting of the glue, the time required for converting the artificial resin or resinous soap to an irreversible and insoluble condition, would reduce production in practice to a non allowable minimum.

According to the invention, instead, the bonding of the veneer joints with artificial resin in a single operation is given up. It is sufficient, for instance in a first phase to connect the veneer strips smeared on their edges with artificial resin, in the jointing machine, running at very high speed by means of strips of paper or similar material just to obtain full plywood boards for coverings, which can be manipulated readily, whilst the necessary heating process with the inherent necessary time delay for the conversion of the artificial resin or soap of said resin is put-off to the further phase of operation under the plywood press proper. Thus in this press simultaneously with the plywood sheet, is also automatically achieved the bonding of the single joints of the face and bark veneers without any particular loss of time.

This new achievement of a process, known in itself of temporarily jointing veneer strips in the jointing machine by means of adhesive strips, whilst putting-off the setting under high temperature and in a certain length of time of the artificial resin to the further phase of the operation wherein the bonding proper of the plywood sheet is achieved, is made possible because the artificial resin in the joint is being isolated by means of the adhesive layer of the strip of paper or of tissue. Said strip, after the bonding is achieved and after a proper moistening, may be torn off readily.

With this division of the bonding operation of the veneer joints in two phases: namely in a first phase in which the strips of veneer already provided with artificial resin or resin soap on their edges are temporarily jointed and in a second final jointing phase whereby the artificial resin is converted, the following advantages are obtained:

By means of the veneer jointing glued with artificial resin, besides all the advantages already stated, it is possible to abandon all restrictive specifications relatively to the application and the number of veneer joints in the outer layers for high duty material, because the resistance of the joint in artificial resin is greater than the breaking stress of the timber in any direction at right angles with the fibres.

A better utilization of the raw materials is then possible with a greater uniformity in the final product, because all faulty parts may be cut away and replaced with a jointed piece of veneer. Therefore it is again possible to turn out sheets of larger sizes and it is possible in the construction of airplanes to better utilize the materials with less loss of time in erection, because it makes a real difference to be able to work on sheets of say 2,5 square meters surface, rather than with sheets of 1.50 sq. m. or less (say 1 sq. m.).

The invention covers also the products, namely the veneers and plywoods obtained with this method.

It is to be understood that in practice the details for achieving the invention may vary in any way without thereby exceeding the limits of the invention.

RUDOLF LUDWIG.

Published May 11, 1943

Serial No. 308,846

ALIEN PROPERTY CUSTODIAN

MATERIAL FOR ARRESTING SOUNDS AND HOLDING WARMTH

Masaichi Tominaga, Hasunuma-cho, Kamata-ku, Tokyo, Japan; vested in the Alien Property Custodian

Application filed December 12, 1939

This invention relates to a material for arresting sounds and holding warmth consisting in that, between the two deer-hair plates which are prepared from straight deer hairs combined each other in immersing and pressing them in a solution of resin mixed with a small quantity of rubber latex, strips of the same deer-hair plate are arranged in a row at small and same intervals and sticked to the plates, one surface of the formed triple deer-plate having a strong paper sticked with a thick layer of mixed adhesives of sodium silicate, casein and a small quantity of rubber latex.

The object of my invention is to obtain a light and effective material for arresting sounds and holding warmth, which is prepared from porous and light deer-hairs in several different layers so as to absorb all sorts of sounds, and which is recommendable for such conveyors as trains, airplanes, motorcars etc. I have specially chosen the deer-hair to be the raw material for the present invention, because the deer-hair abounds in hollows and is far lighter than other animal fibres.

The deer-hairs used in the present invention must not be curled and must be washed beforehand in a solution of caustic alkali and also treated with such a fire-proof solution as sulphate of ammonia, phosphate of ammonia or boric acid. According to my invention, the treated deer-hairs are, after drying, levelled to a layer, and, immersing and pressing the layer in a solution of resin mixed with a small quantity of rubber latex, a porous and light deer-hair plate is obtained. Between the two deer-hair plates thus obtained, strips of the same plate are arranged in a row at small intervals and sticked to the plates on both sides of the individual strips, one surface of the formed triple deer-hair plate having a strong thick paper sticked with a thick layer of mixed adhesives of sodium silicate, casein and a small quantity of rubber latex. The construction of the invention is illustrated in the accompanying drawing, in which

Figs. 1 and 2 are diagonal views of deer-hair plates and strips manufactured according to the foregoing method; Fig. 3, a partly sectioned diagonal view of the material for arresting sounds and holding warmth according to the present invention.

1 is a porous and light deer-hair plate manufactured in immersing and pressing non-curled straight deer-hairs in a solution of resin mixed with a little of rubber latex. **2** is strips of the said plate. The strips **2** are inserted between and sticked to the two deer-hair plates **1** and **3** at small and same intervals **6**. On one surface of the formed triple plate, a strong thick paper **5** is sticked with a thick layer **4** of mixed adhesives of sodium silicate, casein and a small quantity of rubber latex.

In the present invention, high frequency sounds are mostly absorbed by the triple deer-hair plate consisting in adhering hollow deer hairs with one another in a spongy form, and remaining sounds are cancelled by their mutual interference in the intervals **6** between the strips **2**. The layer of adhesives **4** such as sodium silicate and casein and paper **5** which are applied on a surface of the plate not only absorb all or most part of low frequency sounds, but also strengthen the deer-hair plate and make the fitting work of the plate easy when it is in use. Furthermore, as the present invention adopts the hollow and light deer hairs as its main raw material, the product is of very light weight, which is a point most advantageous in case it is used for the sound arresting materials in such moving objects as trains, motor cars, airplanes, etc. Besides, the mixture of rubber latex with other adhesives as well as spaces left between the strips give the product flexibility which facilitates the use of the product on curved walls.

As the product according to the present invention is mainly prepared from the porous deer hairs, it can be used also for the purpose of holding warmth.

MASAICHI TOMINAGA.

PUBLISHED

MAY 11, 1943.

BY A. P. C.

M. TOMINAGA

MATERIAL FOR ARRESTING SOUNDS AND HOLDING WARMTH

Filed Dec. 12, 1939

Serial No. 308,846

Fig. 1.

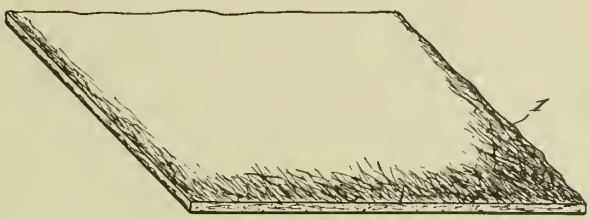

Fig. 2.

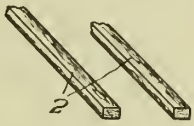

Fig. 3.

Fig. 4.

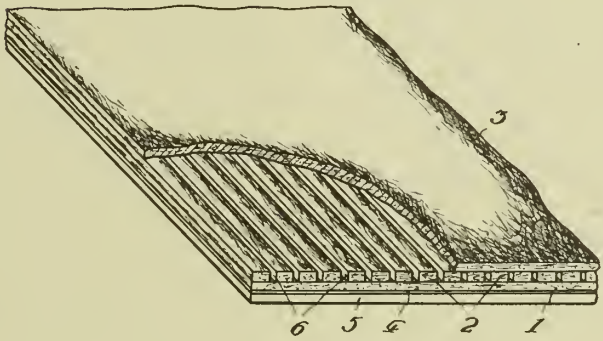

INVENTOR.

Masaichi Tominaga,

BY

Christian R. Nielsen

ATTORNEY.

Published May 11, 1943 Serial No. 309,103

ALIEN PROPERTY CUSTODIAN

AIR CARBURATION SYSTEM

Pier Giorgio Vanni, Milan, Italy; vested in the Alien Property Custodian

Application filed December 13, 1939

This invention relates to an air carburation system and more particularly to a process that allows to obtain the carburation of the air that feeds the internal combustion engines. For this purpose, the use of a piston pump has also been proposed, but such a solution was very complicated. Furthermore, the quantity of fuel delivered to the engine being not constant, there has to be provided a pump for each cylinder of the engine. In order to avoid said difficulties, it is necessary to have a simple pump, capable of delivering, under mean pressures and in a constant and sure way, very small quantities of nonlubricating liquid. In this way, the use of the carburettor may be avoided.

The difficulty arising through the adoption of such a pump depends particularly on the use of a nonlubricating liquid. Then, if the pump is constructed with high watertightness, in order that the pump operation may be satisfactory, the clearances between the parts in movement are too small, and this results in an abnormal wear and easy seizing.

The main object of the invention is the application of a particular and very simple pump, as for inst. the so-called gear driven pump. Through the provision of two loose gearings and some other arrangements, this pump solves the problem. The liquid retaining zones between the parts in movement and the fixed parts must have resilient walls. In this way the desired tightness is obtained and wearing and seizing avoided. According to the invention, said resilient walls are obtained either by making use of the pressure that is provided by the pump itself and that forces the gearings against the casing, or by means of mobile segments or walls that push the gearings elastically upon their sides or flat faces.

A further object of the invention is the provision of such means as to enable the gearings to work without being forced with respect to their axes. It is therefore useful to provide a universal joint between the driving shaft and the driven gearing.

When such a pump is connected to an engine and adjusted for a good fuel dosage, it may feed the engine in a perfect way, either at full load or at any different number of revolutions. But when it is desired to reduce the motor torque, it is necessary to reduce the capacity of the pump and generally the sucked air quantity, in order to obtain a good combustion.

Another object of the invention is the provision of adapted means for regulating the quantity of fuel delivered at each revolution, and, if necessary, for sending the required fuel to the different cylinders. For this purpose, a distribution has been provided by means of rotating disks pressed against each other through the pressure of the liquid. One of the discs is arranged so as to regulate the fuel quantity to be sent to each cylinder through a simple angular displacement.

In order to obtain a fine spraying of the fuel, which has to be mixed with the air, an injector, the turbulent action of which may be regulated, is provided.

Other objects and advantages of the present invention will be more clearly understood from the following detailed description of some preferred embodiments of the invention, which are illustrated in the accompanying drawings, in which:

Fig. 1 is a cross-section of the pump.

Fig. 2 is a longitudinal section of the pump.

Fig. 3 is a longitudinal section of an alternative embodiment of the pump.

Fig. 4 is a longitudinal section of another constructive form.

Fig. 5 is a longitudinal section of a spray nozzle.

Fig. 6 is a longitudinal section of a spraying system.

Fig. 7 is a cross-section of the spraying system shown in Fig. 6.

Fig. 8 is a cross-section of a further alternative embodiment.

Fig. 9 is a cross-section of the same spray nozzle.

The pump (Figs. 1 and 2) has to be driven by the engine which it feeds. This pump consists of a couple of toothed wheels **1** and **2**. These wheels rotate within the body of the pump **9**, pushing the fuel towards the pipe **3**. These two toothed gearings are completely free in their chambers. They have but to be urged to rotate. For this purpose the toothed gearing **2** driving the toothed gearing **1**, is moved by its driving shaft **19** through a universal joint **4**. As said before, the two toothed gearings **1** and **2** send the liquid through their movements into the pipe **3**. In this way a pressure is created. This pressure makes adhere the peripheric surface of the teeth to the chamber walls, creating in this way a good tightness. In order to obtain the tightness upon the two lateral surfaces, a segment **5** is placed along the whole length of the gearing chamber. This segment is biased by the spring **20**, so as to adhere to the side of the toothed gearings with a suitable pressure and assuring in this way a resilient tightness upon the sides of the gearings. A ball valve **6** is pushed on its seats by a spring **7**. When the pressure reaches a predetermined value, the liquid returns towards the suction side of the pump.

The embodiment shown in Fig. 3 has the whole of the lower surface of the pump chamber movable and pushed against the lower flat surface of the gearings **1** and **2**. The sheet **21** forming the lower surface of said chamber is adjacent to a suitable resilient layer **22** of cork or any other suitable material. Said layer is supported

by the supporting member 23. This supporting member 23 is suitably pushed towards the gearings through the screw 24.

The sheet 21 is a Bakelite or fibre sheet, as these materials have the property of allowing rather high pressures, without fear of an excessive wear; this is of particular importance, when the gearings are hardened steel gearings, said hardened steel being extremely hard. When the pump is working, the pressure of the pump overcomes the pressure applied by the cork 22 upon the Bakelite sheet 21. But when the chamber 25 is closed and in communication with the pump chamber, in which enters the liquid, a counterpressure is established immediately, and the wall 21 will adhere again to the toothed wheels.

Now, it may be that it is necessary to feed separately the cylinders. In this case it is necessary to provide that the pump may subdivide and dose the liquid suitably. Figs. 6 and 7 show an arrangement suitable for such a purpose. The shaft 13 drives the rotation of the disk 28, which is provided with a hole 11. This shaft 13 is coupled with the engine shaft through a suitable speed reduction, an arrangement according to the number of engine cylinders. The disk 28 is preferably of Bakelite. Towards this disk is placed the disk 29 provided with a series of holes, such as 12 and 27. This disk may be angularly adjusted by means of the lever 15. Pipes, such as 10 and 18 are provided in a fixed member connected with the pipes feeding the engine cylinders. Through these pipes the liquid leaves, in order to enter the different cylinders. The axes of these pipes are generally in alignment with the axes of the holes 12 and 27. In the chamber 14 the liquid arrives under pressure and forces the disks 28 and 29 upwards, in order to reach the desired tightness. When the disc 28, provided but with the opening 11, rotates, it uncovers successively each inlet of the feeding pipes 10—18. These pipes feed the liquid to the cylinders, as it has been seen before. In this way it is possible to dose separately the liquid feeding the different engine cylinders. Rotating the lever 15, it is possible further to reduce the quantity of liquid, as by said adjustment the time of the opening of each pipe is reduced. In fact, as long as the axis of the pipe 10 is in alignment with the axis of the hole 12, the opening and the closing of said holes coincide. If, however, the hole 12 is displaced with respect to the pipe 10, there will be a delay in the opening of the passage from the chamber 14 to the pipe 10 or an anticipation in the closing of the same passage, according to the sense of the movement. In this way is obtained a regulation of the feeding time, and in consequence of the quantity of liquid that will be fed to the cylinders.

Figs. 4 and 8 show some improvements of the embodiments shown in the other figures. The tightness between the tooth ends and the chamber walls may be improved through a resilient system. Besides the pressure of the liquid, this resilient system aids said teeth to adhere to the chamber walls. For this purpose, the toothed wheel 32, which is seen in cross-section, has a central hole, and a resilient rod 34 aids to push said toothed wheel in the sense determined by the pressure.

In order to avoid the complication of a separate spraying nozzle, the toothed wheel 31 may be arranged in such a way as to cause the desired fuel distribution, and the separate distributor may be entirely dispensed with. In fact, the pump pushes the liquid into the chamber 33 (Fig. 4) through the holes 35 (Fig. 8). After having forced the wall formed by the sheet 39, assuring in this way the desired tightness, the liquid passes through the oblique pipe 30 provided in the toothed wheel 31. The number of revolutions of the toothed wheel 31 is in a suitable ratio with the engine revolutions, so as to deliver to the pipes 36 and 37 and then to the different cylinders the desired fuel quantity. In this way, the desired spraying is obtained. For the regulation of the fuel quantity delivered to the cylinders, it is necessary to provide the following arrangement. Through the pipe 41 the liquid arrives at the valve 38. This valve governs the pressure according to the tension that is given to the spring 40. Said device is provided with a lever 61, adapted to adjust the tension of the spring 40, in order to obtain the desired pressure, as, when the predetermined pressure is overdrawn, the excedent liquid will return through the pipe towards the suction side of the pump. Governing in this way the delivery pressure, it is possible to regulate the discharge speed, and in consequence the quantity of liquid feeding the engine.

Fig. 9 shows the spray nozzle applied to the air suction tube. Fig. 5 shows the turbulence chamber. The tube 57 receives the liquid under pressure from the pump. Through a branched duct the liquid is fed to the valve 56, the action of which is regulated through the spring 55. The other branched duct feeds the liquid to the hole 53, and said liquid will flow tangentially into the chamber 52.

The whole arrangement works as follows: The liquid that enters the chamber 52, starts rotating very quickly, before it can leave through the hole 51. Through this rotation it is pulverised immediately, and this rotation continues until the centrifugal force causes such a pressure at the outlet of the hole 53 that the liquid, necessarily under pressure in the whole pipe, has the force to open the valve 56. A part of the liquid enters then the chamber 52, through the hole 54, and is mixed with the other part, provided with a rotatory movement. There is obtained herewith a diminution in the centrifugal action, without, however, obtaining a less good pulverisation, because, the speed of leaving being high, this speed itself aids to obtain the pulverisation. In this way, considerably greater holes may be provided, and the high pressures are therefore avoided, having all the same a good pulverisation.

When the quantity of fuel per revolution is reduced, the quantity of air to be admitted to the engine has generally to be regulated also. For this purpose, the flap valve 50 is to be provided, upon the pipe that feeds the carburetted air to the engine. This flap valve 50 may, for inst., be connected to the lever 61, Fig. 8, in order to obtain the desired regulation.

Since certain changes may be made in the above embodiments of the invention, without departing from its spirit, it is intended that all the matter contained in the above description or shown in the accompanying drawings, shall be considered as illustrative, and not in a limiting sense.

PIER GIORGIO VANNI.

PUBLISHED
MAY 11, 1943.
BY A. P. C.

P. G. VANNI
AIR CARBURATION SYSTEM
Filed Dec. 13, 1939

Serial No.
309,103

Fig. 1

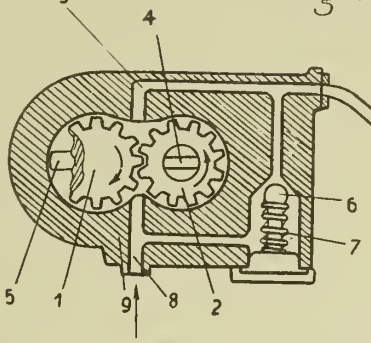

Fig. 6

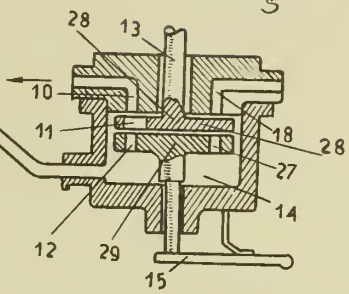

Fig. 2

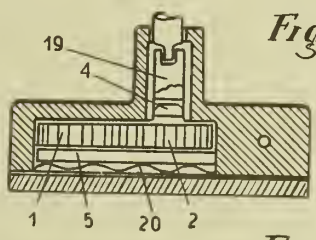

Fig. 7

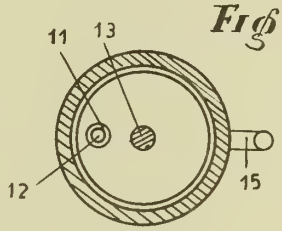

Fig. 3

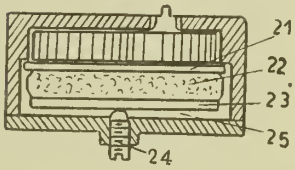

Fig. 8

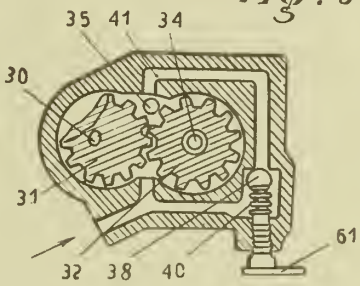

Fig. 4

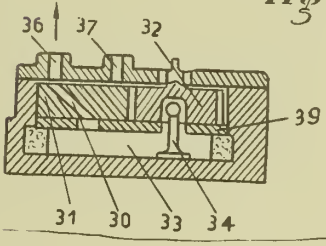

Fig. 9

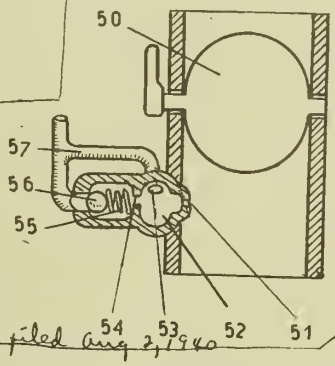

Fig. 5

Canceled per paper # 4A filed Aug 2, 1940

Inventor:
Pier Giorgio Vanni
By Young, Emery & Thompson
Attorneys

Published May 11, 1943

Serial No. 310,581

ALIEN PROPERTY CUSTODIAN

METHOD FOR INCREASING THE DURABILITY OF POLISHED SURFACES OF OPTICAL ELEMENTS

Alexander Smakula, Jena, Germany; vested in the Alien Property Custodian

No Drawing. Application filed December 22, 1939

Amongst the kinds of glasses available for the making of optical instruments there are quite a number whose life is rather limited on account of their polished surfaces notwithstanding the influences of their environs in general and the attacks of the humidity and acid vapours in the air in particular. Being hygroscopic and sensitive to acids these kinds of glasses could not therefore be used to the desired extent despite their often very excellent optical properties.

The invention relates to a method for eliminating this defect. This method consists in a thin layer of a substance indifferent to humidity and acids in the air being evaporated upon the surfaces exposed to the said influences, whereupon the optical element in question is subjected to an annealing process to reinforce the adhesion of the layer to the said surfaces. In this manner the surface of the optical element is closely and securely covered by a layer which, without impairing the optical effect protects the said surfaces so treated from the said attacks. Owing to their high resisting qualities to the influences in question it is in first place the substances quartz (SiO_2) or fluorspar (CaF_2) which come into question for evaporation upon the said surfaces. The power of adhesion depends upon a number of factors, such as f. i., on the properties of the evaporated substance as well as on the kind of glass of the optical element and on the nature of the application. The heat employed in the annealing process must be applied during a period which is conditional upon the aforesaid circumstances on the one hand, but on the heating temperature on the other. Experiments have shown that good results were brought about by the application of a heating temperature of a few hundred degrees Celsius for a period up to a few days.

ALEXANDER SMAKULA.

Published May 11, 1943

Serial No. 310,552

ALIEN PROPERTY CUSTODIAN

PROCESS FOR THE MANUFACTURE OF SIEVE NETTINGS

Emil Hubert, Dessau-Ziebigk, and Herbert Rein, Leipzig, Germany; vested in the Alien Property Custodian

No Drawing. Application filed December 22, 1939

This invention relates to the manufacture of sieve nettings. Metal wire nettings are frequently used for various technical purposes, for instance as sieve grates, covering devices etc., as no other netting material shows the same elasticity and hardness needed for this purpose.

Surprisingly it was found, that wires consisting of polymerized artificial materials like polyvinyl chloride, polyvinyl formals or interpolymers of various vinyl compounds or of vinyl compounds with other unsaturated compounds, are most suitable for the manufacture of wire nettings, especially when these artificial wires are stretched during manufacture. In the same way other artificial materials are useful consisting of linear organic high polymers like condensed ω-amino-carboxylic acids or their functional derivatives, for instance esters or urethanes or of condensation products, which are obtained by intercondensing diamines with dicarboxylic acids or by polymerisation of lactams. As suitable raw materials of the last group may be mentioned the following: long chain condensation products consisting of 6-aminohexanoic acid or of urethane-9-pelargonic acid, also polymerisation products of ϵ-caprolactam hexamethylen or condensation products of hexamethylen-diamine and adipic acid or pentamethylenediamine and adipic acid.

Such artificial wires may be woven or plied just like metal wires without changing anything on the weaving machinery. Artificial sieve nettings obtained in this way approach very closely metal nettings regarding elasticity and resistance towards normal stress. By selecting amongst the above mentioned different groups of synthetic polymers and adding plasticizers and hardeners, it is possible to manufacture wire nettings of different hardness and elasticity.

Wire nettings according to the present invention have the advantage compared with metal nettings that they are of lower weight and not so easily subjected to corrosion in case they stay moist or soiled with sieved material. Furthermore they have the advantage especially when consisting of wires stretched during manufacture, to be shrunk by a heat shrinking process. In this way such fine-meshed nettings are obtained, as it would be impossible in a weaving process with metal wires. Furthermore it is possible to produce mixed nettings consisting of metal wires and wires of linear high polymers or artificial materials with polyvinyl chloride, in which for instance the warp is made of metal wires and the weft of the above mentioned organic high polymers. Also nettings for which metal wires together with organic high polymers of the above mentioned kind are employed, are valuable for many purposes.

EMIL HUBERT.
HERBERT REIN.

Published May 11, 1943

Serial No. 311,428

ALIEN PROPERTY CUSTODIAN

APPARATUS FOR THE AUTOMATIC QUILTING OF ARTICLES OF MATERIAL ESPECIALLY COLLARS

Ernst Sommer, Berlin SW 61, Germany; vested in the Alien Property Custodian

Application filed December 28, 1939

The invention relates to an apparatus for the automatic quilting of articles of material and is characterized thereby, that an article of material is clamped in a clamping carriage so that a uniform portion of the edges to be quilted of the article of material projects beyond the clamping plate of the clamping carriage. With this object in view the clamping plates are shaped according to the contours of the collar to be quilted at those points at which the piece of material has to project beyond the edge. The clamping carriage is resiliently pressed against a stop arranged just in front of the stitch hole of a sewing-machine, in that the lower clamping-plate bears against this stop. The carriage is at the same time positively moved in longitudinal direction by a driving mechanism, so that the front edge of the clamping plate moves along the stop and a quilted seam is produced by the sewing in accurate distance from the edge of the material.

In order to be able to carry out in one continuous sewing proceeding also the transverse seams, which generally extend at right angles or even at an actute angle to the main seam, a transverse movement is imparted to the clamping carriage by means of curved guides.

A spindle with reversing screw threads is provided for the positive movement of the clamping carriage, a nut having a pin engaging in this screw thread is positively moved to and fro on the spindle.

In order that for the production of the transverse seams the uniformly pushing forward movement of the nut can be disengaged, the nut is not connected directly with the clamping carriage but through the intermediary of a bell crank lever, which at its angle is oscillatably mounted on the nut by a transversely extending bolt, one end of the bolt being guided by a curved guide whereas the other end engages by a catch in the clamping carriage. By super-position of the uniformly progressing movement of the nut and of the oscillating movement of the bell crank lever the necessary aboslute movement relative to the machine frame can be imparted during the sewing of the transverse seam to the upper end of the bell crank lever and thereby to the carriage.

The invention provides further arrangements for holding fresh parts of material which have still to be quilted and also arrangements which place the parts of material on to the clamping carriage and adjust them on this carriage, so that absolutely uniform quilted seams are produced on all edges.

Particulars of the devices will be explained hereinafter with reference to the accompanying drawings, in which a form of construction of the invention is illustrated by way of example.

Fig. 1 shows diagrammatically a top plan view of the automatic machine in the scale 1:10.

Fig. 2 is an end view of part of the machine shown in Fig. 1 viewed in the direction of the arrow A in the scale 1:4,

Fig. 3 shows in elevation a part of the spindle, the nut head and the curved guide in the scale 1:4,

Fig. 4 shows in end view a part of the automatic machine viewed in the direction of the arrow B with the locking arrangement for the carriage guide and the releasing arm for closing the clamping device of the carriage,

Fig. 5 shows the carriage in top plan view,

Fig. 6 is a cross section on line VI—VI of Fig. 5,

Fig. 7 is an end view of the carriage as shown in Fig. 5, the clamping plate being opened,

Fig. 8 is a cross-section on line VIII—VIII of Fig. 5,

Fig. 9 shows in side elevation the driving mechanism for the holder of the material and for the reversing device,

Fig. 10 is a top plan view of Fig. 9,

Fig. 11 shows in side elevation the oscillatable disc for driving the rack of the reversing device,

Fig. 12 shows in side elevation another curved guide for guiding the middle anchor pin,

Fig. 13 shows in a section on line XIII—XIII of Fig. 10 the reversing device with clamping device opened,

Fig. 14 shows the same device as Fig. 13 but in the position in which the reversing device is ready to grip a part of material from the holder and in section on line XIV—XIV of Fig. 10.

Fig. 15 shows a guide lever for the releasing mechanism of the clamping device in section on line XV—XV of Fig. 10,

Fig. 16 shows in top plan view the chain wheel and the cam gears on the section line XVI—XVI of Fig. 9.

The automatic machine consists of a driving engine 1 which by a chain 2 drives a gear 3, from which through a transmission shaft 4 a sewing machine 5 of usual construction is driven, the base plate 6 of this machine being embedded in the plate 7 of the machine frame, so that the surfaces of the plates 6 and 7 are in the same plane. Blanks of collar piled up in a pile 8 are singly placed on a holder 9 which will be particularly described hereafter and from which they are taken at the suitable moment in an absolutely automatic manner by a reversing device 10 and

conveyed to the clamping device of a carriage 11.

The carriage 11 is guided by means of arms in a guide rail 12 in both directions of movement C and D. The frame plate 7 of the machine is cut out at 13 at the point where the carriage is located.

A spindle 14 with oppositely directed screw-thread grooves is arranged parallel to the rectangular aperture 13. This spindle 14 is journalled at both ends of the machine in arms 15 and rotated from the driving gear 3 through the intermediary of a worm gear 16 and of a shaft 17. A nut 18 on the spindle 14 engages into the screw-threads of spindle 14 by a catch, not shown in Fig. 3, so that at the rotation of the spindle a to- and fro-movement is imparted to nut 18.

At one side of the nut 18 a bell-crank lever 20 is oscillatably mounted on a bolt 19 extending transversely to the spindle 14, the lower horizontal arm 21 of this bell crank lever having at its end a guide pin 22 adapted to move along a curved guide 23 during the movement of the nut. The upper arm of lever 20 is double fork-shaped. Two fork arms 24, 25 have hub parts 26, 27 which engage from both sides on a bracket 28. The upper portion of each arm 24, 25 is again forked. The fork arms 24, 25 are connected by rods 29, 30 extending transversely to the spindle 14. An arm 31 fixed on the carriage 11 engages between these guide rods.

A slidable sleeve 36 is fixed by means of an arm 35 on the nut 18 and guided on a guide rod 37 extending parallel to the spindle 14. A jib 38 is also fixed on nut 18 and carries in three parallel bores indexing pins 39, 40, 41 pressed into the lower position by springs 42, 43, 44 acting each against a stop. These stops 45, 46, 47 are arranged so that the indexing pins in their inoperative position can still move freely just above a guide plate 48.

The guide plate 48 is arranged parallel to the spindle 14 and has in its upper surface four grooves 49, 50, 51, 52 extending in longitudinal direction. Cams 53, 54, 55, 56, 57, 58 and 23 are arranged in these grooves. The functions of these cams will be explained in the description of the operation of the machine. The guide plate 48 is fixed at both ends on the machine frame by jibs 60, so that it is shiftable by means of grooves and springs transversely to the longitudinal direction. In brackets 61 fixed on the jibs 60 a push rod 62 is mounted adapted shiftable parallel to the longitudinal direction of the guide rod. At each end of this push rod horizontal pins 63 are fixed against which, when the nut is moving, an abutment arm 64 strikes alternately and thus shifts the rod actually in the one or other direction each time when the nut arrives in the extreme position. By two vertical pins 65 engaging in oblique slits 66 of the guide plate 48, this guide plate is moved to and fro transversely to the longitudinal direction.

Above the step-shaped bordering of the jib 38 two rows of oscillatable plates 67, 68, 69, 70, 71, 72 are mounted stepwise by means of oscillatable shafts 73, 74, 75 and 76, 77, 78 which shafts are actually oscillated by the indexing pins.

The oscillatable plate 67 moves, through the intermediary of a lever system not shown in the drawing, grippers 80 which are oscillatably mounted on a shaft 81 and serve for automatically removing the blanks which have been sewn. The plate 68 controls through a lever system 82, 83 in a manner known per se and not illustrated in the drawing the disengager for stopping the sewing machine. The plate 69 controls through the intermediary of a lever system 84, 85 an oscillatable arm 86 which has a nose 87 serving for opening the clamping plate of the carriage.

The plate 70 of the oscillatable plates arranged on the other half of the machine controls, as shown in Fig. 4, through the intermediary of a lever 90, 91 a second oscillatable arm 92, whose nose 93 serves for closing the clamping plate on the carriage. By the lower plate 77 the gear for engaging the sewing machine is actuated, and by the oscillatable plate 78 a bolt 97 is controlled through a slide 95 having an inclined surface 96, said bolt locking the guide bar 12 at the suitable moment.

On the arm 35 of nut 18 a gear element consisting of pinions 101 and 102 is rotatably mounted on a vertical pin 100 (Fig. 2). The lower pinion 101 meshes with a rack 103 fixed on the machine frame on a certain length parallel to the longitudinal direction of the spindle, whereas the pinion 102 meshes with a rack 104 which is shiftable on a dovetailed guide bar 105 extending from the lower surface of the machine plate. An upwardly extending finger 106 is fixed on rack 104 and adapted to slide along one of the edges of the opening 13 in the plate of the machine frame. When the two pinions rotate, the finger 106 is according to the ratio of transmission moved rapidly and in a substantially shorter time over the stroke length than the nut 18. The finger 106 engages at certain positions behind a corresponding finger of the carriage and serves for rapidly returning the carriage.

On the arm 35 of nut 18 two curve plates 107, 108 are fixed parallel the one above the other. In the cam groove of the upper plate 108 engages a guide pin 109 which is mounted on an arm 110 which is mounted by a pin 111 in the machine frame so that this pin can oscillate.

A corresponding guide pin 115 is arranged as shown in Fig. 2 on the other side of the machine frame on an arm 116 oscillatable about a pin 117 and carrying a vertical pin 118 which extends upwards through an oblong hole 119 and is connected by a link 120 with the guide rail 12. The two oscillatable arms 110 and 116 are of similar shape. They differ merely in that the guide pin 115 is situated lower than the guide pin 109 and consequently engages in the cam groove of the lower plate 107 when this plate at the to and fro movement of the nut head is in the right hand position.

The guide pin 109 has a vertical pin 114 which extends through an oblong hole 112 of the machine plate and is connected by a link 113 with the guide rail 12.

The guide rail 12 is connected at both ends by links 125 of the levers 126 oscillatable on the guide rod 37. Springs 127 engage on the rail 12 for shifting this rail in the direction of the arrow E (Fig. 1).

The carriage consists of a base plate 130 on which, as shown in Figs. 5, 6, 7 and 8, an axle 132 is rotatably mounted by means of bearing bodies 131. On this axle 132 three other bearing bodies 133 carry an oscillatable stretching plate 134. The bearing bodies 133 are connected with levers 136 by links 135, these levers being keyed on a control shaft 137. This control shaft 137 is connected through the intermediary of bearing bodies 138 with the base plate 130. The base plate 130 carries at one end a toothed segment 141 on a hook-shaped lever 140 attached to a

bearing body 139, this toothed segment meshing with teeth 142 on the control shaft 137.

Approximately in the middle of the base plate a bell crank lever 144 (Fig. 8) is fixed on a bearing body 143 and acts through a toothed segment 145 on a pinion 146 in the inner side of the shaft. The levers 140 and 144 have flat faces 147 and 148 onto which the noses 87 and 93 respectively of the oscillatable levers press in each extreme position, to thus open or close the stretching plate 134 by simple turning movement.

With reference to Fig. 1 the movement of the carriage 11 will be described.

It is assumed that this carriage is in its inoperative position on the right hand side of Fig. 1. In this position of the carriage, the reversing device 10 is in its oscillating position. At the end of this oscillating movement the reversing device has deposited the blank 201 onto the base plate 130 of the carriage, an accurate depositing on the base plate and especially an adjusting relative to the edge 134*a* being ensured in that the blank is securely held by means of the clamping plate owing to the positive guiding through the intermediary of the levers 300 and 306, so that a certain, uniform strip of the blank projects beyond this edge. The same is valid for the side edges 134*b* and 134*c* over which the blank projects at similar width. Needle pins are provided on the clamping plate 134 at the three edges 134*a*, 134*b*, 134*c* for securely holding, these pins engaging into the fabric when the clamping plate is lowered. To prevent damaging of the needle points holes are made in the base plate 130 at the points opposite the needle pins.

After the reversing device has placed the blank 201 onto the carriage, the nose 93 strikes against the press plate 148 and folds down the clamping plate 134, so that the blank is securely held. This movement is carried out by oscillating of the plate 70 (Fig. 4) by the cam 56 which lifts the indexing pin 39. In this position the nut 18 moves in the direction of the arrow G (Fig. 3). The guide pin 109 then moves along the edge 107*a* (Fig. 3), so that the carriage is moved in the direction of the arrow E in the prepared position for the transverse seam along the edge 134*b*. At the moment when the guide pin has attained the apex of the angle between the guide faces 107*a* and 107*b*, the needle of the sewing machine is at the rear end of the edge 134*b*. At this moment the indexing pin 40 encounters the cam 57, whereby the sewing machine is started. When the movement of the guide pin continues along the guide face 107*b* the transverse seam 134*a* is sewn.

In order that the carriage, in spite of the uniform continuous movement of nut 18, cannot carry out any longitudinal movements, the pin 22 of the bell-crank lever moves on the curved guide edge 59, which is shaped so that on the rods 29, 30 on which the catch 31 of the carriage engages the longitudinal movements of the nut are equalized by a corresponding relative movement to the right, so that the catches 31 remain at rest relatively to the machine frame.

At the moment when the sewing machine needle has arrived in the corner between the edges 134*b*, 134*a*, the pin 22 arrives on an essentially horizontal portion 59*a* of the curve, so that then a movement of the carriage in longitudinal direction takes place. The carriage is then guided after the manner of a copying stencil by a nose 11*a* arranged in front of the stitching hole on the stitching plate, in that the front curved edge of the base plate 130 comes to bear against this nose under the action of spring 127. During this stencil-sewing none of the pins 109 comes into touch with any of the curved guides 107 or 108.

The edge 134*a* having been sewn, the nut 18 has been moved into the left hand position, so that now the left guide pin 109 comes into engagement with the corresponding cam plate 108 and slides along the guide edge 103*a*. The transverse seam 134*c* is sewn. When the needle of the sewing machine has arrived on the rear end of edge 134*c*, also the indexing pins 39, 40, 41 have got on the curved guides 53, 54, 55, so that at the same time the sewing machine is stopped by the middle plate 68, the clamping plate 134 of the carriage 11 is opened by the nose 87 through the oscillatable plate 69, and the grippers 80 are closed, so that the completely sewn collar is securely held in the machine plate.

The guide pin 109 moves then along the guide edge 108*b* of the curved guide and conducts the carriage in the direction of the arrow H into the inoperative position, so that the catch 31 comes out from between the prongs 29, 30 of fork 20 and gets behind the nose 106 of rack 104 which then returns the carriage into the initial position.

In order that during the return movement the indexing pins do not encounter the cams, an arm 64 has in the left hand dead point position pushed towards the right the push rod 62 and at this occasion shifts towards the rear the guide plate 48 by half the distance between two guide grooves, so that the three indexing pins can freely move backwards between the grooves without encountering the cams.

After the carriage has arrived in the right hand dead point position, the catch 106 is again disengaged from the rack. In this disengaged state a new blank is inserted. After the carriage has again carried out the reversing movement in the direction of the arrow B the indexing pin 41 first encounters the cam 58 and disengages through the plate 78 the locking bolt 97 of the guide bar 12, so that the guide bar can be controlled by the cam plate 107 in lateral transverse movement.

In order that at a rapid idle stroke the rail 12 is not guided by the springs 127 on the stop nose, a locking bolt 97 is provided in plate 7 of the machine frame.

From a pile 8 of blanks stamped according to the desired shape of collar one blank 201 is laid into the indented portion 202 of a base plate 203 (Figs. 9 and 10) of a table 9, and adjusted thereby that it bears on the rear edge 204 as well as at the lateral edges 205 and 206.

Above the indented portion 202 a pressing plate 207 is arranged which corresponds as regards shape to the outer edge 208 of the blank 201, and which is dimensioned in width so that a narrow uniform portion of the blank projects from under the press plate 207. The press plate 207 is oscillatably mounted on pins, not shown in the drawing, by means of two supports 209 and 210 and of parallelogram links 212, 214 on jibs 215, 216. The angular jibs 215, 216 are fixed on the two end sides of base plate 203. The upper links 211 and 213 of the parallelogram links are extended to beyond the pins on the supports 209 and 210 and connected the one with the other by a transverse part 217 in order to increase the stability of the machine.

The device 9 for holding the blanks is coor-

dinated to a reversing device 10 which will be hereinafter described in detail.

It consists of a reversing plate 220 (Fig. 14) which is fixed on two arms 221, 222 by means of screws 223 and 224, one end of the arms 221 and 222 being enlarged to form jibs 225, 226 by means of which the reversing plate 220 is oscillatably mounted on a shaft 227. The reversing plate 220 has at its front end two projecting tongs 228. The boundary line of the front edge 229 of the reversing plate 220 corresponds to the mirror-reflected boundary line of the front edge 218 of base plate 203 and has also an inwardly curved shoulder 230 (Fig. 13).

In the front portion of the reversing plate 220 a clamping plate 235 is arranged, the front edge of which corresponds to the shape of the front edge 229 of the reversing plate 220. The downwardly directed nose 236 of plate 239 can engage into the inwardly curved shoulder 230 of the reversing plate 220 (Fig. 13). This construction of the reversing plate and of its clamping plate serves to grip the blank 201 which before the tongues are closed can be pushed against the rear vertical wall of the inwardly curved front edge 230.

The clamping plate 235 is fixed by screws 239 and 240 on two arms 237, 238 which carry at one end hubs 241, 242, by means of which the clamping plate 235 is oscillatably mounted on the rocking shaft 227. Narrow tongues 243 projecting in the direction of the axle 227 and situated approximately at the height of the tongues 228 of the reversing plate 220 are further provided on both ends of the clamping plate 235.

In the arms of the reversing plate 220 as well as of the clamping plate 235 circular apertures 244, 246, 245, 247 are provided which are mutually displaced so that they vertically register when the clamping plate is in the opened position (Fig. 13), but only partly overlap in the closed position (Fig. 14). Into these apertures a rod 210 engages which extends almost over the whole reversing device parallel to the axle 227, said rod having in the region of the two pairs of holes 244, 246 and 245, 247 pistons 251, 252 with conical portions 253, 254 merging into the rod.

A cross pin 256 of rod 250 (Fig. 9) engages in an oblong hole 258 (Fig. 10) arranged transversely to the longitudinal axis of rod 250 in a bell-crank lever 257. This lever 257 is fixed by means of a screw 259 at the end of the upper arm on a several times angularly bent jib 260, on one end of which the reversing plate 220 is fixed. The lower arm of lever 257 has at its end a guide pin 261. On the rod 250 a fork 265 is fixed between the arms 221 and 233 by means of its widened hub 266, so that its fork-shaped end 267 engages over the axle 227 (Fig. 15).

To hold the clamping plate 235 in closed position a spiral spring 268 is wound around shaft 227 and connected with one end on the reversing plate 220 and with the other end on an extension 269 of the arm 245 with such tension, that the clamping plate in the closed position is pressed at a certain tension with its nose 236 into the indentation 230 of the reversing plate 220.

The axle 227 is rollably mounted at one end by a roller 270 on the plate 271 of the machine frame (Fig. 10). At the other end of shaft 227 a spur wheel 272 is keyed which has two guide discs 273. The spur wheel 272 serves to roll shaft 227 on a rack 274. A guide bow 275 (Figs. 10 and 13) is provided for guiding the spur wheel 272 and for preventing the same from disengaging from rack 274, the inner horizontal edge of this bow serving to guide shaft 227 during the downward rolling.

The hereinafter described curve- and lever-drive serves for the mutual movement of the blank holder and of the reversing device.

A sprocket wheel 281 is turned at a low number of revolutions about its axis 282 from the main drive of the machine through the intermediary of suitable transmission gears not shown in the drawing and of a chain 280. A connecting lever 284 is hingedly connected with a cramp pin 283 eccentric to the pivot axle 282 and grips from below with its fork-shaped end over a guide plate 285 (Fig. 12) and its pin 286 connecting the two ends of a fork-shaped arm 287, 288 engages in a slot 287 of this guide plate 285. This slot is composed of a longer lower vertical portion 287*a* and of an upper short inclined portion 287*b* arranged at an angle. The guide disc 285 is rigidly mounted on the machine frame in a manner not shown in the drawing.

The pin 286 is extended at both ends to beyond the two ends 287, 288 of the lever and engages with one end into a guide slot 289 in an oscillatable plate 290, said slot being bent off at an angle several times, and a hub 291 of this plate is mounted on a shaft 292 so that the plate can freely oscillate about this shaft. The guide slot 289 has an upper oblique portion 289*a*, a lower portion 289*b* extending almost in vertical direction, and a middle portion 289*c* which extends almost in horizontal direction and connects the upper and lower portions. The oscillatable plate 290 is connected at its upper end by means of a pin 293 with a fish plate 294 hinged on a rack 274 by a pin 295.

At the other end of the pin 286 two links 296, 297 are scissors-like arranged, their other ends carrying pins 298, 299 which are fixed on two oscillatable levers 300, 301 approximately at the middle of the same. The link 297 has in its lower end an oblong hole 302 so that it can not only oscillate relative to pin 299 but also be shifted by the distance of the oblong hole.

The lever 300, mounted by its lower hub 303 so that it can freely oscillate on the shaft 292, carries at its upper end on a hub 304 over a pin 305 a push-rod 306 which at both ends has outwardly directed slight bends 307, 308. The other end of the push rod 306 is fixed on shaft 227. A steering rod 312 extending parallel to the push rod 306 for the uniform guiding is hinged at the one end on the rocker shaft and at the other end by a pin 313 on the upper hub 309 of a two-armed lever 310, the lower hub 311 of which is mounted on the shaft 292 so that it can freely turn.

The two-armed lever 301 can freely oscillate about a shaft 316 by means of its lower hub 315 and carries on its upper hub 317, through the intermediary of a pin 318, a bearing body 319 which is fixed near one of the ends of the base plate 203 of the holder 9. A second lever, not shown in the drawing, is oscillatably mounted parallel to lever 301 in such a distance from this lever and oscillatable about shaft 316, that its upper end can engage near the other end of the base plate 203 with a bearing part. A bearing body 320 is fixed on the rear end of the base plate 203 and bent towards the rear and connected by means of a fork 321 and of a pin 322 with the oscillatable lever 323, the lower end of which is oscillatable about shaft 292. In this manner the holder is shifted parallel to itself during the

oscillating movement of the levers 301 and 323.

A crank lever 326 (Fig. 16) is keyed on the short shaft 325 parallelly arranged to shaft 282, said crank lever engaging by means of an oblong hole 327 in the tapered end of the crank pin 283. Two cams 328, 329 are further keyed on shaft 325 and mutually displaced, which cams are shaped in manner shown in Fig. 9. A rod 330 rests on cam 328, one end of this rod being fixed to a ring 331 and is oscillatable about the shaft 292. A ring-shaped body 332 is fixed on the other end of rod 330 and carries a vertical push rod 333 and is guided in a guide 334 on the machine frame 271. The push rod 333 has a head 335 which carries a U-shaped bow 336, one arm of said bow engaging under the oscillatable rod 210*a*. This bow serves for the automatic lifting of the clamping plate 207.

The cam disc 329 (Figs. 9 and 16) can come into engagement with a roller 340 mounted on a pin of a sector disc 341 so that it can easily rotate. The sector disc 341 has a hub 342 by means of which it is mounted on the shaft 292 so that it can freely oscillate. On an other pin 343 a pull rod 344 is hinged which is hingedly connected on a middle pin 345 of a two-armed lever 346 which is oscillatably mounted at its lower end on a shaft 347. On the upper end of lever 346 a short link 348 is fixed pivotably about a pin 347, said link having a pin 349 engaging in a guiding aggregate (Fig. 10). This aggregate consists of a guide frame 350 fixed on the machine frame 271 and carrying in a dovetailed guide 350*a* a guide carriage 351, in which the pin 349 is fixed. The pin 345 can carry out a horizontal movement in an oblong hole 352 in frame 350. The guiding carriage 351 has at one end a guide face 353 extending approximately at an angle of 45°, said guide face exerting upon a guide pin 261 during the movements of the carriage 351 a pressure in the direction of the arrow *a* (Fig. 10). Another guide face 355 arranged on a hook-shaped guide element 354 can exert under certain conditions a pressure on the pin 261 from the other side during the movement of the carriage 351 in the direction of the arrow C, this direction being opposite to the direction of the arrow *a*, in order to return in this manner the rod 250 into the original position.

A bell-crank lever 361 is oscillatably mounted on a pivot pin 360 arranged on the machine frame (Fig. 9), the end of the horizontal arm of this lever being adapted to strike at its downward movement against the pin 286, so that the lever is oscillated. The end of the other lever arm is connected by a pin 362 and a link 363 with the pin 345 of lever 346.

The operation of the device for carrying the blanks in connection with the reversing device is as follows:

After a blank 201 has been laid into the indentation 202 of base plate 203 and adjusted by being pushed against the edges 204, 205, 206, which is effected during the running of the machine and when the reversing device 10 is in its lower position, as shown in Figs. 10 and 3, the cam 328 has been turned by continuous rotation of spur wheel 281 so that it moves away from the rod 310, so that rod 330 descends and the bow 336 liberates the rod 210*a*, so that the plate 207 descends and, by gravity, assisted if desired by a spring attached to the links 213 and 214, clamps the blank 201 between the plates 207 and 203.

When the rotation of spur wheel 281 continues, the crank pin 283 moves to beyond the upper dead point position, so that by link 284 the pin 286 is moved downwards in the oblique portion 287*b* of the slot 287. As the portion 287*b* of the slot forms a curve around the link pin 298, the lever 300 is not yet oscillated. Also the lever 301 is not yet oscillated at this downward movement of pin 286, as the lever 297, by means of the oblong hole 302, slides along pin 299. The oblong hole 302 and the portion 287*b* of the slot are of such length that the pin 299 moves through the oblong hole 302 during the same time as the pin 289 moves through the portion 287*b* of the slot.

If, when the movement continues, the pin 286 engages into the vertical portion 287*a* of the slot, the levers 300 and 301 are simultaneously opened like scissors during the whole downward movement of the pin 286 in the slot portion 287*a*. Hereby on the one hand the reversing device is moved through link 306 of lever 300 in the direction of the arrow B (Fig. 9), and at the same time the spur wheel 272 rolls on rack 274 in simultaneously oscillating the reversing device. The lever 301, which during this operation is oscillated in opposite direction, moves the holding device in opposite direction, that is in the direction of the arrow C.

During the downward movement of pin 286, the oscillatable plate 290 is at first not moved, as the portion 289*a* of the groove registers with the groove 287*b* (Fig. 10). Only when the pin 286 strikes against the lower end of the horizontal groove portion 289*c*, an oscillation in anticlockwise direction is exerted upon the oscillatable plate 290 wherefrom results, through the intermediary of the link 294, a shifting in left hand direction of the rack 274 in the direction of the arrow C. The speeds of the links 306 and 294, as they are oppositely directed, are thereby added, so that the relative rolling movement between spur wheel and rack is accordingly increased and also the oscillating movement.

If the pin 286 engages in the lower groove portion 289*b*, the oscillating movement of the plate 290 stops and therewith also the shifting of rack 274.

When the pin 286 strikes against the lower guide face of the slot portion 289*c*, the oscillatable disc 290 shifts rack 274, whereby the oscillating movement of the reversing device is accelerated.

On a comparatively long portion of the lower slot portion 287*a* the oscillating movement of the levers 301 and 300 is only very little for two reasons: The links 296, 297 are then in a more or less stretched position, whereby comparatively great vertical movements of the pin 286 cause only little horizontal movements of the pins 298, 299. On the other hand the crank pin 283 is near the lower dead point position, so that for this reason alone the vertical speed of the pin 289 is little.

During this period of rest of the levers 301 and 300 and consequently also of the holder and of the reversing device the corresponding curvature of the lower slot portion 289*b* of the oscillating plate 290 ensures that the rack 276 carries out such a slight shifting movement, that the tongues 28 of the reversing device can softly bear on to the tongues 29 of the holder (Fig. 10). During this movement the front projecting edge of the blank has engaged into the indentation 330 of the reversing plate 320.

The pin 286 then encounters the lever 291 and

shifts, through the intermediary of the link **263** and of the two-armed lever **346**, the curved guide **354** in the direction of the arrow C, so that the guide face **355** slides along pin **361** and shifts the rod **350** in the direction opposite to the direction of the arrow A, so that by the rod the device is closed.

Shortly hereafter the clamping plate **107** is lifted by the cam **328** (Fig. 9) through the intermediary of the push rod **333** and of the bow **336**.

After the crank pin **383** has again moved upwards to beyond the lower dead point position, the holder and the reversing device are moved the one away from the other at the upward movement of the pin **386**, slowly at the beginning and then more rapidly, the blank clamped in the reversing device with its front edge being oscillated at the same time. This oscillating movement is accelerated when the pin **86** strikes against the upper end of the slot portion **289c** by oscillation of plate **289** in clockwise direction.

ERNST SOMMER.

PUBLISHED

MAY 11, 1943.

BY A. P. C.

E. SOMMER

APPARATUS FOR THE AUTOMATIC QUILTING OF ARTICLES OF MATERIAL ESPECIALLY COLLARS

Filed Dec. 28, 1939

Serial No. 311,428

5 Sheets-Sheet 1

Fig. 1

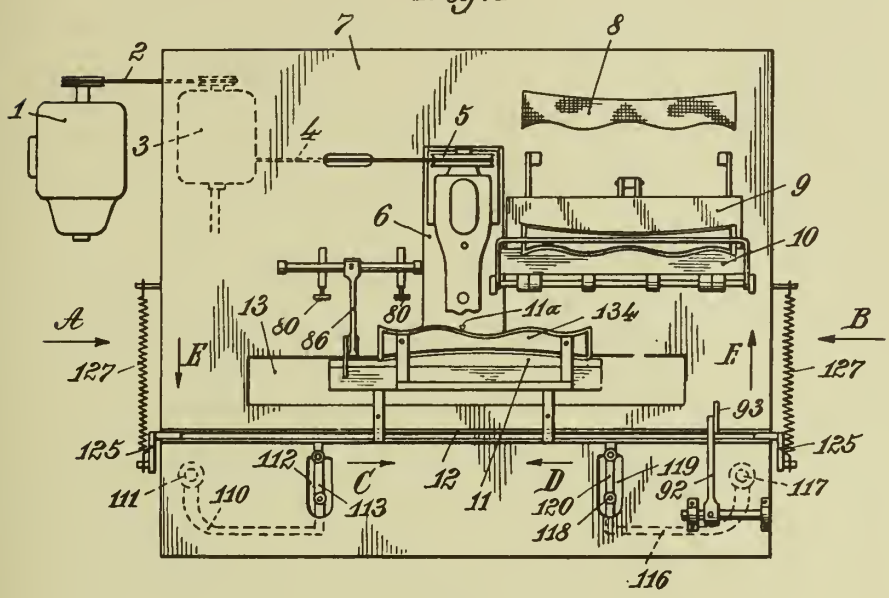

Fig. 2

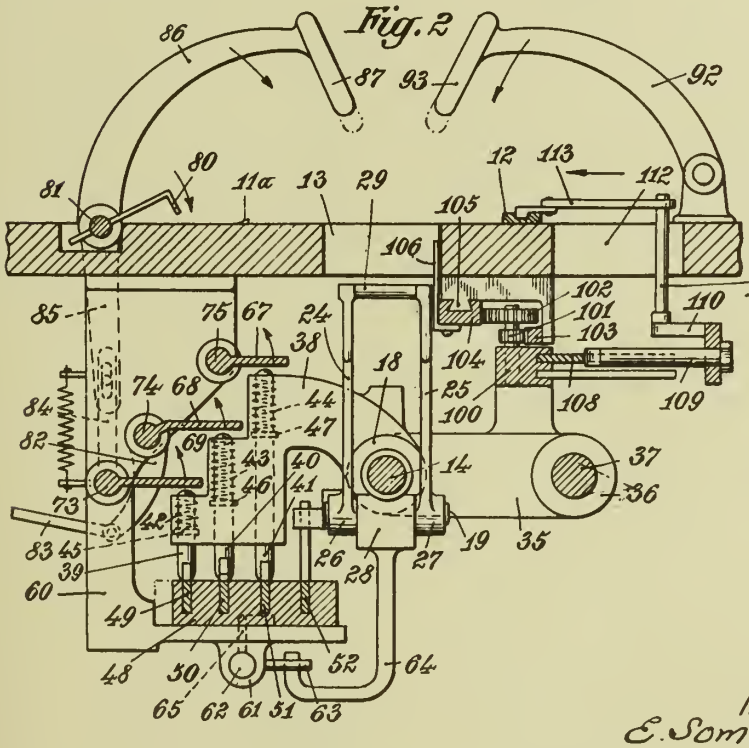

Fig. 2a

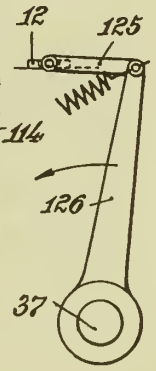

Inventor:
E. Sommer

By: Glascock Downing & Seebold
Attys.

PUBLISHED

MAY 11, 1943.

BY A. P. C

E. SOMMER

APPARATUS FOR THE AUTOMATIC QUILTING OF ARTICLES OF MATERIAL ESPECIALLY COLLARS

Filed Dec. 28, 1939

Serial No. 311,428

5 Sheets-Sheet 2

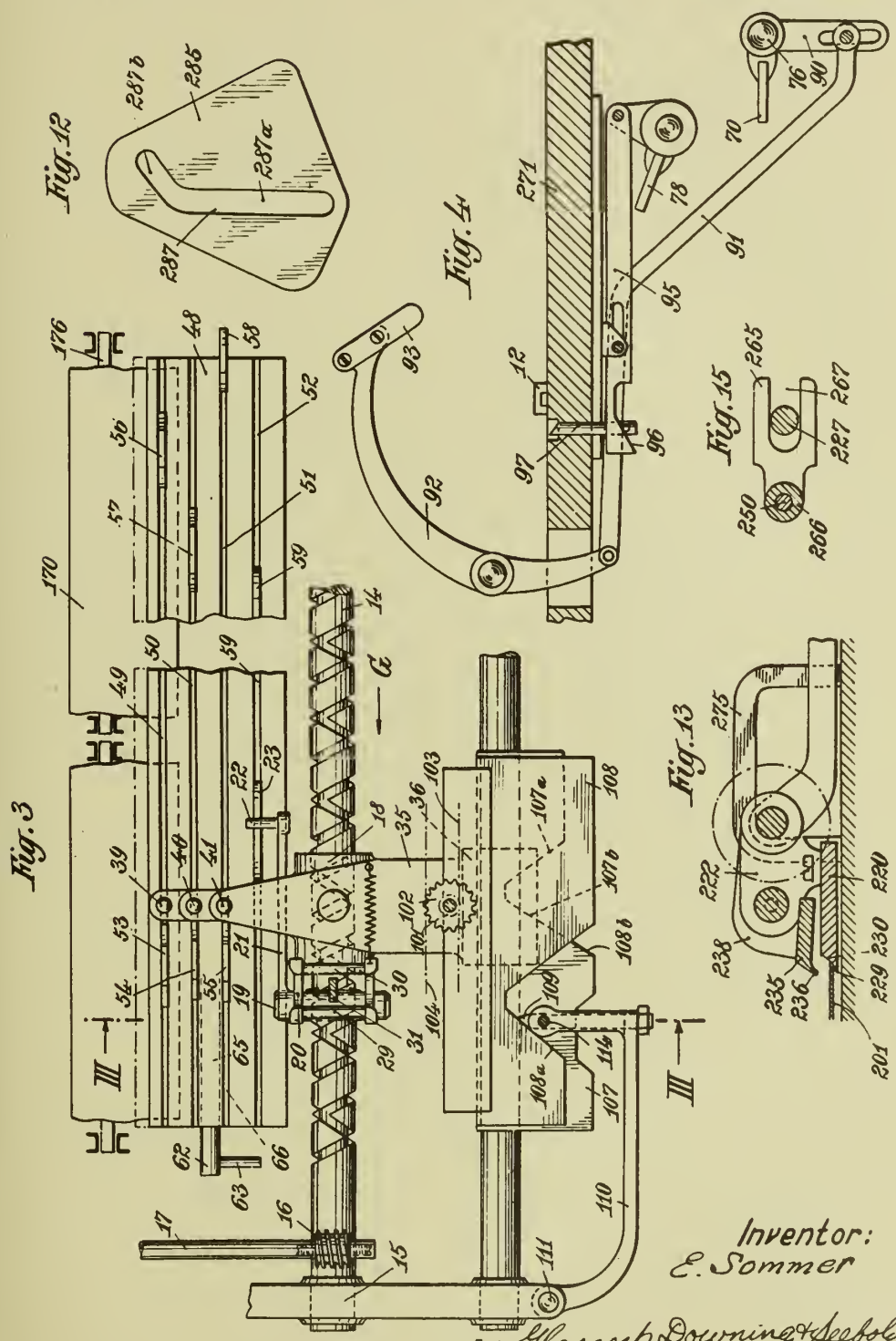

Inventor:
E. Sommer

By: Glascock Downing & Seebold
Attys.

PUBLISHED

MAY 11, 1943.

BY A. P. C.

E. SOMMER

APPARATUS FOR THE AUTOMATIC QUILTING OF ARTICLES OF MATERIAL ESPECIALLY COLLARS

Filed Dec. 28, 1939

Serial No. 311,428

5 Sheets-Sheet 3

Fig. 6

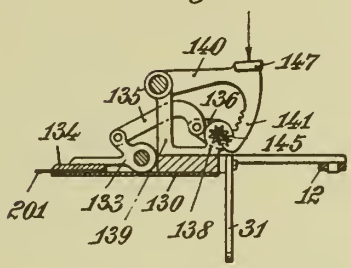

Fig. 7

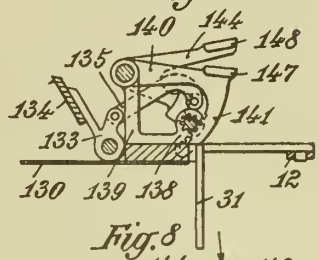

Fig. 8

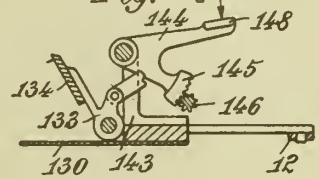

Fig. 5

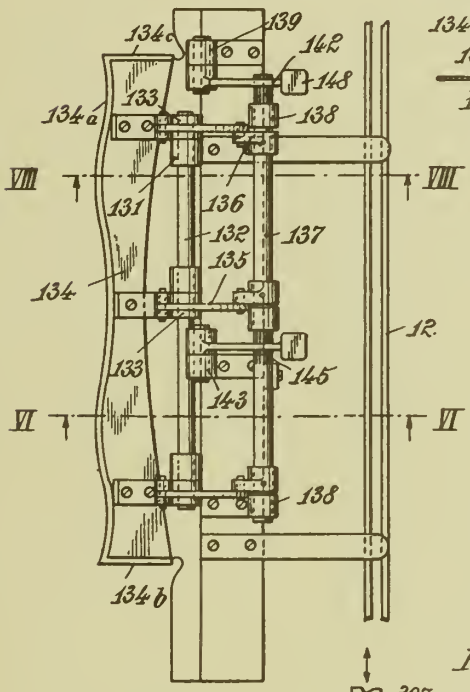

Fig. 11

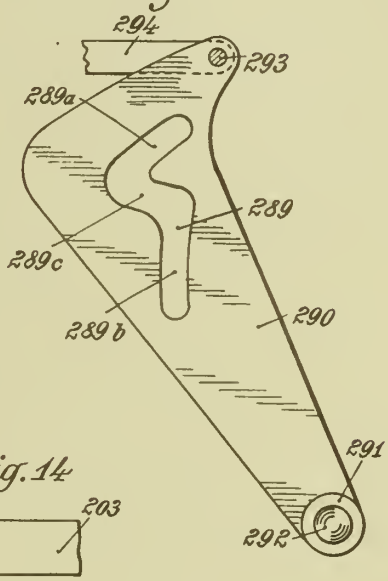

Fig. 14

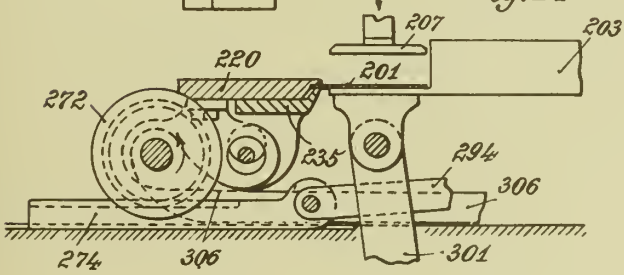

Inventor:
E. Sommer

By: Glascock Downing & Seebold
Attys.

PUBLISHED

MAY 11, 1943.

BY A. P. C.

E. SOMMER

APPARATUS FOR THE AUTOMATIC QUILTING OF ARTICLES OF MATERIAL ESPECIALLY COLLARS

Filed Dec. 28, 1939

Serial No. 311,428

5 Sheets-Sheet 4

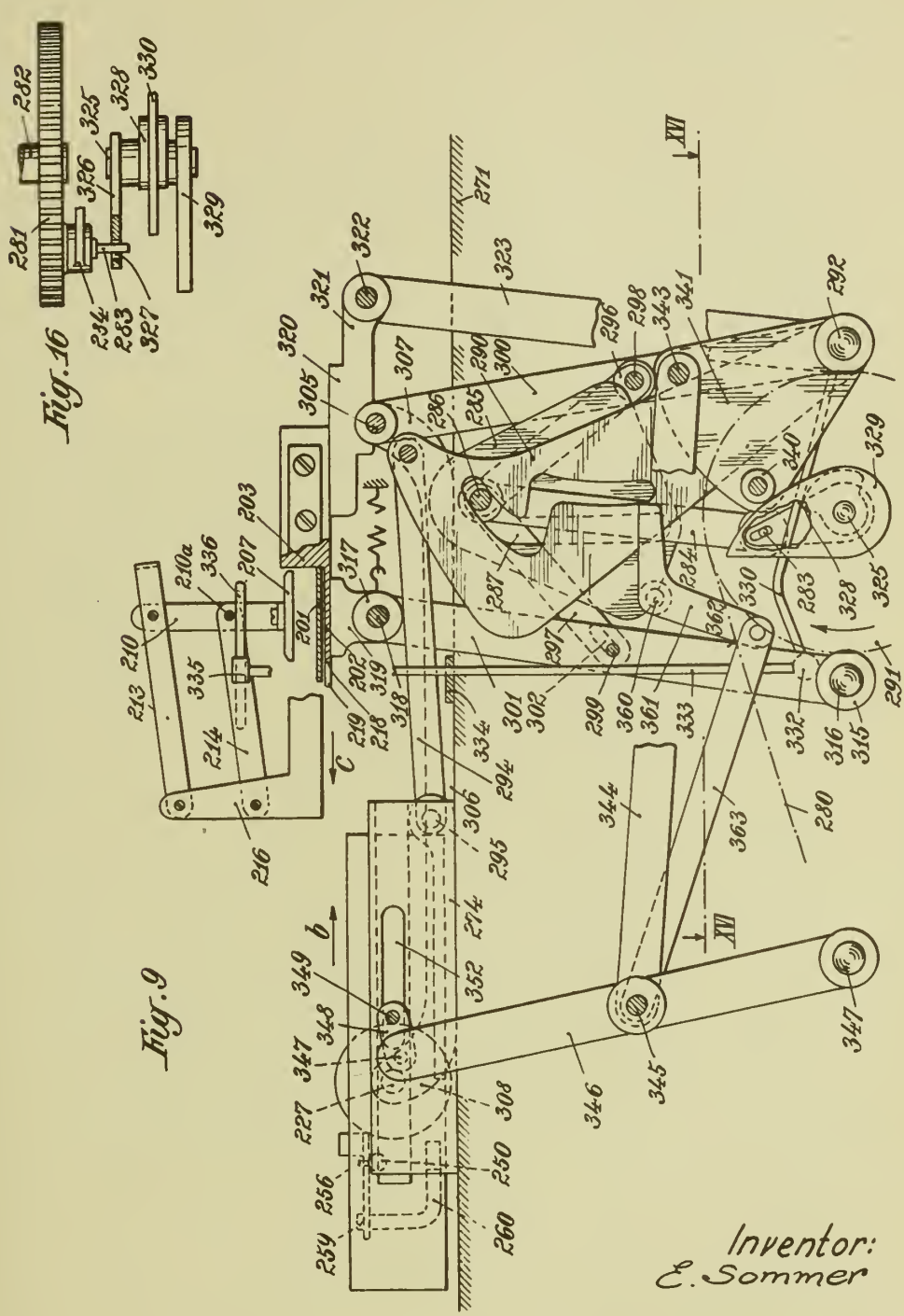

Inventor:
E. Sommer

By: Glascock Downing & Seebold
Attys

PUBLISHED

MAY 11, 1943.

BY A. P. C.

E. SOMMER

APPARATUS FOR THE AUTOMATIC QUILTING OF ARTICLES OF MATERIAL ESPECIALLY COLLARS

Filed Dec. 28, 1939

Serial No. 311,428

5 Sheets-Sheet 5

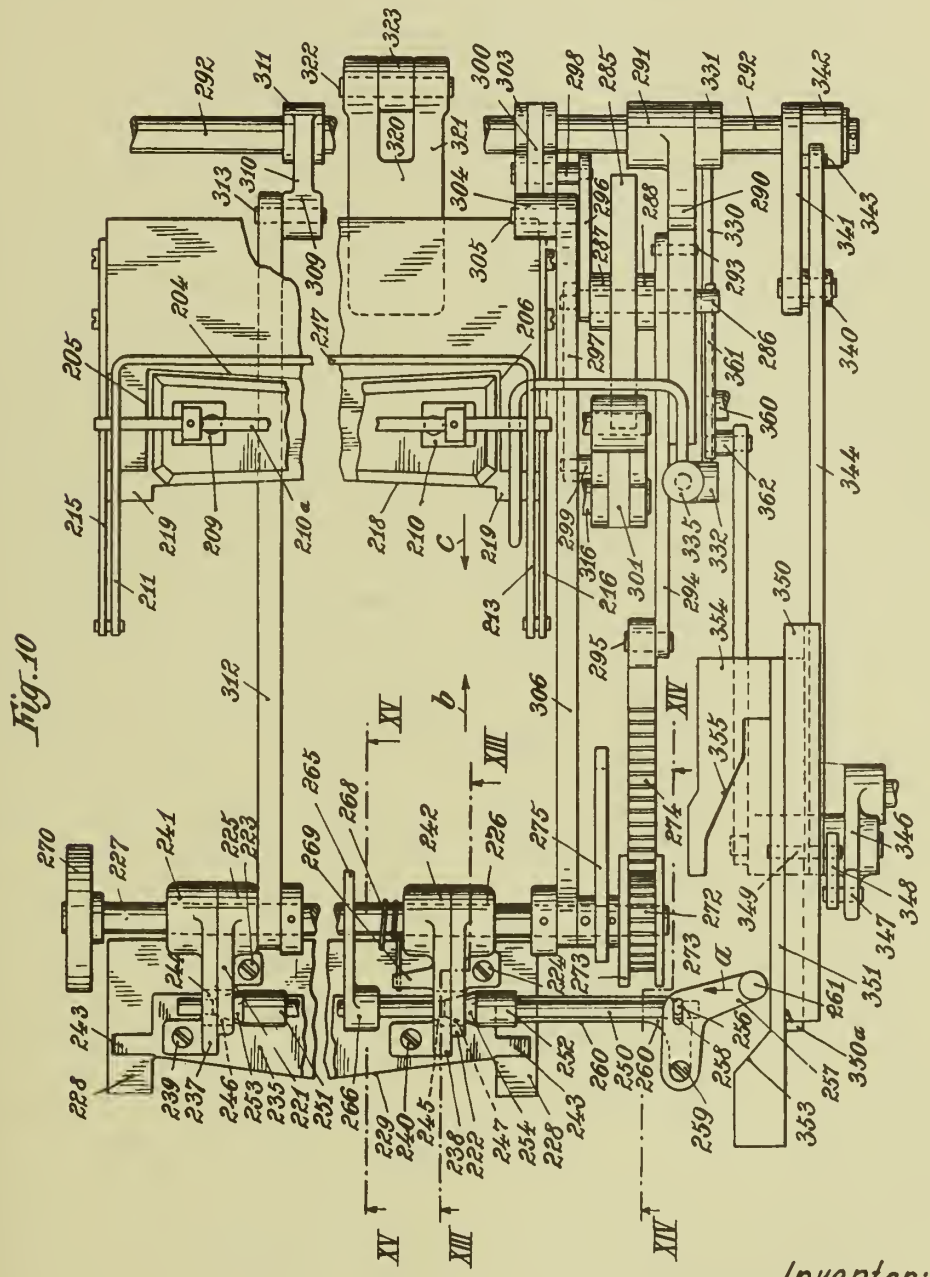

Fig. 10

Inventor:
E. Sommer

By: Glascock Downing & Seebold
Attys.

Published May 11, 1943

Serial No. 312,254

ALIEN PROPERTY CUSTODIAN

PROCESSES FOR THE SUPPLY OF MOISTURE TO PRODUCTS OF FIBROUS SUBSTANCES WITH A BITUMINOUS COATING

Erik Franck Philipson, Copenhagen, Denmark; vested in the Alien Property Custodian

Application filed January 3, 1940

The present invention relates to a process for the supply of moisture to products of fibrous substances with a bituminous coating. The invention has for its objects, first to effect this supply of moisture to such an extent that the product will not subsequently be subject to volume changes owing to the absorption of moisture, second, to render possible the addition of moisture during the manufacture of the product at the same speed at which the product is manufactured, and third, to render possible the supply of moisture by the use of unheated water.

Products of fibrous substances with bituminous coating, for instance roofing pasteboards or felts, insulating pasteboards and similar kinds of pasteboard, insulating jute etc. are known to be manufactured by impregnating the raw material with bituminous substances, at temperatures higher than 100° C. At the same time as the impregnation takes place, a portion of the natural moisture present in the fibres of the raw material will be driven out, and thus a decrease in volume is effected, in such a manner that the impregnated product will occupy a smaller volume than the non-impregnated raw material.

In spite of the surface coating, the fibres of the impregnated product will gradually again absorb their natural content of humidity, corresponding to the conditions of humidity under which the product is used. Therefore the volume of the impregnated product will increase again. The increase in thickness is without importance to the use of the product, while on the contrary the longitudinal and transversal expansion will become plainly apparent by the formation of cross-wise folds in the impregnated product fixed in position at the place of use.

It has therefore been attempted in various manners to add moisture to such impregnated products corresponding to the contents of moisture of the raw product. For instance, watering with hot water of the raw bitumen-impregnated felt has been used, before the surface coating is applied thereto. This method involves the drawback that the bitumen surfaces coatings may easily become filled with small water or vapour bubbles which especially in the case of roofing felts or pasteboards, when influenced by the heat of the sun, will form further blisters and will loosen the coatings whereby the appearance of the roofing will become spoiled, and the length of life of the pasteboard will become reduced.

It has also been attempted to increase the humidity in the finished bitumen-impregnated fibrous substances by depositing rolls of the same in lukewarm water for a longer period, all the way up to several days. Owing to the long time required for supplying the moisture, this method is not very satisfactory from a manufacturer's point of view. The hotter the water used is, the quicker the supply of moisture will be effected, but it is impossible to reduce the time of treatment to less than 3 or 4 hours, because water with temperatures essentially higher than 40° C. cannot be employed, as any sprinkling materials held in the bituminous coatings will become loosened altogether too much at higher temperatures, and similarly the bituminous coating itself will melt, and thus the appearance of the product will be spoiled.

In order to prevent an undesired formation of folds, it has also been attempted to use an impregnation with highly fluid oil. Such a treatment, however, does not lead to the desired result, because water alone, as is well known, can cause the fibres to swell, wherefore such fibres even if they are impregnated with oil may absorb water and hereby increase their volume.

It has finally been proposed during the manufacture to direct the product through rooms that are filled with water vapour, but the quantity of moisture absorbed in this manner is altogether too small to prevent a later absorption of water.

The present invention has also for its object to remedy these various drawbacks, and this and the first named objects are attained in that the air contained in the product is exposed to a change of volume in the presence of moisture. Such a change in volume may either consist in an expansion or a compression of the air contained in the impregnated product. If the impregnated product is exposed to a reduced pressure, in such a manner that the enclosed air can expand, a portion of the air will escape from the product. When subsequently the product is again exposed to a higher pressure, maybe atmospheric pressure, in the presence of moisture, the latter will penetrate into the product, as in the bituminous surfaces there will always be found quite small, maybe microscopic, holes by way of which the moisture will rapidly enter and wherefrom it will distribute itself in the fibres of the product. This forced entrance of moisture will take place during the course of a quite short time, amounting only to a few minutes or less, even if unheated water be used, which is of essential importance to the present processs, as thus any danger of softening or fusing of the bituminous coating of the product will be avoided.

The product may also be subjected to an in-

creased pressure, and thus the contents of air will become compressed at the start, at the same time as moisture penetrates into the interior of the product, and distributes itself in the fibres of the substance. When subsequently the product is again exposed to a lower pressure, maybe the atmospheric pressure, then the previously compressed air will again expand, but the moisture absorbed in the fibres will remain in the interior of the product. The process may be carried out by the use of water and by the use of steam as a source of moisture. Finally, the product may also be exposed to several consecutive treatments, and a partial vacuum as well as an excess pressure may be used.

A vacuum of 4 lbs per square inch to 10 lbs per square inch or an excess pressure of 8 to 20 lbs per square inch will in most cases be suitable.

The drawing shows in outline two apparatuses for carrying out the process.

Fig. 1 shows one apparatus in vertical section, viewed from the side, and

Fig. 2 in the same manner the other apparatus.

The apparatus shown in Fig. 1 consists mainly of a vessel **1**, into which a bell **2** dips down. The apparatus is partially filled with water which is maintained raised in the bell **2** by pumping by way of a nipple **3**. The apparatus has guide and controlling rolls **4** along which a length of bituminous roofing pasteboard **5** is directed, in such a manner that it is directed down into the water in the vessel **1**, and is then directed up into the bell **2**, and subsequently again out from the vessel **1**, as shown in Fig. 1. During its passage through the apparatus, at the speed of manufacture, the roofing felt is thus directed from the vessel **1** up into the bell **2**, while the felt is thus exposed to a rising vacuum. During this upward motion, a portion of the air contained in the roofing felt is sucked out and removed by way of the nipple **3**. During the subsequent downward motion, the roofing felt is exposed to an increasing pressure, and thus the remaining air will again become compressed, and moisture will be forced in, at a high speed.

The apparatus shown in Fig. 2 consists of a deep vessel **6** having guide rolls **4** along which the length of roofing felt **5** is directed, in such a manner that it is directed from the top of the vessel and down to the bottom of the latter, and thence again up to the top and away. The vessel **6** contains water. During the downward motion of the roofing felt the latter will be exposed to a constantly increasing pressure, and thus the air contained in the felt will become compressed, at the same time as moisture will penetrate. During the upward motion, the compressed air will again expand, and will partly escape, while the water bound in the fibres will be retained in the roofing felt.

The process may be performed in many other manners than by using the apparatuses shown here, but both apparatuses are constructed in such a manner that the supply of moisture may be performed during the manufacture of the product itself, by the use of unheated water, and thus security is attained against any injury to the surface of the product.

ERIK FRANCK PHILIPSON.

PUBLISHED

MAY 11, 1943.

BY A. P. C.

E. F. PHILIPSON

PROCESSES FOR THE SUPPLY OF MOISTURE TO PRODUCTS OF FIBROUS SUBSTANCES WITH A BITUMINOUS COATING

Filed Jan. 3, 1940

Serial No. 312,254

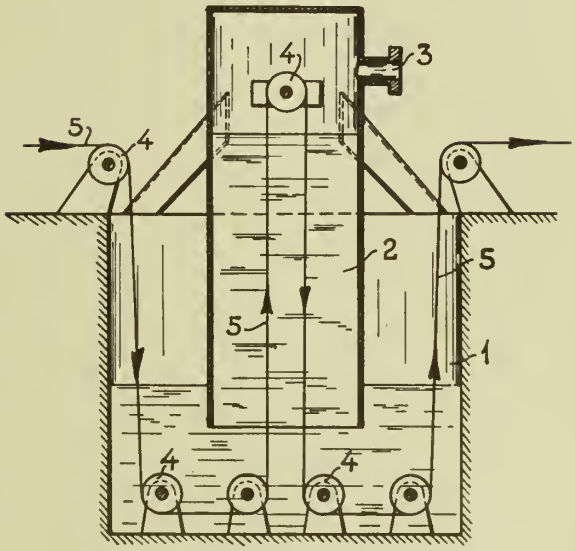

Fig. 1.

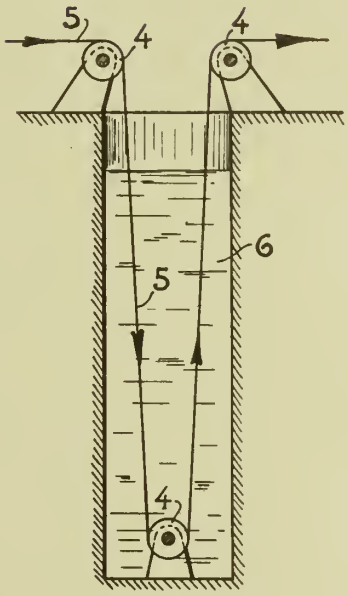

Fig. 2.

Erik Franck Philipson
INVENTOR

By [signature]
his ATTY.

Published May 11, 1943

Serial No. 313,985

ALIEN PROPERTY CUSTODIAN

METHOD FOR PRODUCING METALLIZED DIELECTRIC SHEETS

Hermann Sträb, Stuttgart, Germany; vested in the Alien Property Custodian

Application filed January 15, 1940

This invention relates to a novel dielectric material for condensers and to a method of producing such dielectric material.

It has been heretofore suggested to produce a dielectric for condensers by first applying an insulating coating on one side of a dielectric sheet material which fills up the pores and depressions on the surface of the dielectric material, and then to deposit thereon the metal layer forming the condenser electrode according to a vacuum method. This process has the object of filling up the depressions and recesses on the surface of the dielectric which is to be metallized, by means of an insulating substance in order that the metal layer is applied on an absolutely plane surface and does not form points by penetration into the depressions of the dielectric which points would interfere with the operation of the condenser.

It has now been found that the resulting dielectric layer can be considerably improved and the disruptive strength increased by applying on the supporting sheet a plurality of layers of the insulating coating substance in a plurality of successive operations, to obtain a structure as indicated purely schematically in the figure, showing a cross sectional view, on an enlarged scale, of a metallized paper for the production of condensers, having the invention applied thereto.

The favourable effect of this procedure is probably due to the following phenomenons: The lacquers or varnishes which are preferably used for the production of the coating, or in fact any varnishes and lacquers now known have a relatively low percentage of constituents capable of forming a film, but a high percentage of solvents. Almost all these varnishes and lacquers contain more than 75 percent of solvents. On drying of the varnish or lacquer the solvents evaporate so that the thin spots and depressions will be formed again in the remaining film-forming substances. Therefore, a coating **2** consisting of one layer of varnish or lacquer on the paper **1** would not be reliable with regard to its disruptive strength. By application of a further coating **3**, on the other hand, in accordance with the present invention, the depressions of the lower varnish layer are also filled up and smoothened. Of course, thin spots will also be formed in the second layer **3**, but these will not be exactly above the thin spots of the first layer, but on other points. In this manner, it is ensured that a varnish layer of sufficient strength is provided everywhere between the paper or like support and the metal layer or condenser plating. The chance that any weak points exist in the dielectric layer may be further reduced by a third coating **4**. It is extremely improbable that weak points of all the three layers coincide with each other on a single point of the dielectric and, therefore, the risk of disrupture is further reduced. Tests have shown that where 90 punctures occur per one meter, for example, at a tension of about 950 volts, with a paper having one coating layer, this figure is reduced to about 50 punctures with a paper on which two varnish or lacquer coatings are applied while with 3 coatings not more than 2,5 punctures have been measured. This will show conclusively that the chance for weak spots in all three varnish coatings coinciding on one point is extremely small. The metal coating **5** is applied after drying of the last insulating coating **3** or **4**, in any suitable manner.

In the above mentioned example a paper of a thickness of 9,7 microns has been used. The thickness of the first varnish layer was 0,8 microns, while the thickness of two further varnish layers was 0,7 microns each. Accordingly the paper including its three coatings had a thickness of 11,9 microns. A paper of this thickness without a varnish or lacquer coating would by no means show these favourable values. For example a paper of 9,7 microns thickness, without a coating, for example, was found to have 660 punctures per meter already at a tension of 680 volts.

The successive coatings may be all approximately of the same thickness, but it is also possible to provide a second and third layer of less thickness, to keep the total thickness of the varnish coatings at a low figure. For the same reason, a two-fold coating is in general satisfactory for practical requirements, since the properties of a paper having a double coating meet absolutely the technical conditions. At least for the last coating a heat-resistant coating substance should be used which does not decompose on the subsequent metallising operation and does not yield any gas. The successive coating layers may be all applied in one operation or in a series of operations, immediately following each other, respectively, provided that provision is made for the preceding layer to be dried, by suitable drying apparatus, before the next coating station is reached.

A condenser made of metallized paper in accordance with the present invention has considerably higher values of insulating power and disruptive strength compared to condensers produced of paper to which one varnish coating only has been applied.

The method and apparatus of the present invention have been described in detail with reference to specific embodiments. It is to be understood, however, that the invention is not limited by such specific reference but is broader in scope and capable of other embodiments than those specifically described and illustrated in the drawing.

By way of example a solution of cellulose in an ether may be used as a coating material for the first coatings and a solution of nitrocellulose in an ester may be used for the last coating, since this material meets with the above specified conditions regarding heat-resistant properties.

HERMANN STRÄB.

PUBLISHED

MAY 11, 1943.

BY A. P. C.

H. STRÄB

METHOD FOR PRODUCING METALLIZED DIELECTRIC SHEETS

Filed Jan. 15, 1940

Serial No. 313,985

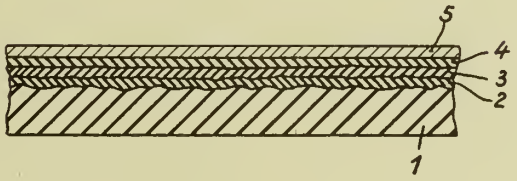

Inventor
Hermann Sträb
by Roy F. Steward
his attorney

Published May 11, 1943

Serial No. 314,190

ALIEN PROPERTY CUSTODIAN

FUEL SUPPLY CONTROL APPARATUS FOR INJECTION INTERNAL COMBUSTION ENGINES

Max Hurst, Stuttgart, Germany; vested in the Alien Property Custodian

Application filed January 16, 1940

This invention relates to a fuel supply control apparatus for injection internal combustion engines.

It has already been proposed to provide two governors for combustion engines which are adapted to act independently from each other on the fuel delivery adjustment member. One governor will be a pneumatic governor and, when the engine is idling, responds to the comparatively high degree of vacuum in the induction pipe of the engine. The second is of the centrifugal type and serves to reduce the fuel supply, when a predetermined engine speed is exceeded. Each of these two regulators has a separate loading spring, adapted automatically to return the governor element to its initial position, which in the case of the pneumatic governor is that position of the governor elements when no vacuum prevails and in the case of the centrifugal governor is the position of rest of the weights close to their axis of rotation.

In known arrangements of this kind the rod which forms the coupling between the two governors and the fuel delivery adjustment member of the injection pump requires an additional loading spring, which assures that the rod remains constantly in connection with the movable governor elements and does not remain standing in any intermediate position. Although in many cases this third spring may be relatively weak, it exerts nevertheless an unfavourable influence on the operation of the governors.

According to the invention this disadvantage is avoided substantially by the fact that neither of the two governors is ever completely out of operation, but that when one of the governors is in operation the inoperative governor holds fixed an axis of the common adjustment rod, which engages with the fuel delivery adjustment member, to render said rod sensitive to the governor in operation. In this manner a positive connection is formed between both governors and the adjustment rod so that the fuel delivery adjustment member is always maintained in the position which is most favourable under the given running conditions, without the necessity of an additional return spring for the rod.

The invention is more particularly described with reference to the accompanying drawings, in which:

Figure 1 is a diagrammatic representation in section of one form of construction of the device according to the invention.

Figure 2 is a detail of Figure 1.

Figure 3 is an enlarged section of an eccentric for one of the governor levers being part of the detail shown in Figure 2.

Figure 4 is a section through a modified form of construction.

Figure 5 is a further detail, and

Figure 6 is a graph showing the relationship between fuel supply and engine speed.

1 is an air filter and 2 an induction pipe through which the combustion air is led, in the direction of the arrow 3, to an injection internal combustion engine which is not shown. In the air feed induction pipe 2 is disposed a rotatable throttle valve 4 which is connected, through a lever 5 and a connecting rod 6, to an operating lever 8 which is loaded by a spring 7. When the engine is stopped the operating lever 8 and the throttle valve 4 stand in the position of rest as shown in the drawings, in which position the throttle valve is almost closed.

9 is an injection pump and 10 is a part of the cam shaft of this injection pump which projects from the pump housing. On the cam shaft is disposed a centrifugal governor 11 which rotates with the shaft. The centrifugal governor has several radial arms 12 on which slide centrifugal masses 13. On the free ends of the arms 12 are adjustable stops 14 against which rest springs 15 which tend to force the masses 13 inwards towards their axis of revolution and have an initial tension which is so adjusted that the masses may move rapidly outwards only when a predetermined maximum speed of rotation such as for example 1,800 revolutions a minute, which the engine may not exceed, has been attained. The outward movement of the masses 13 turns the cranked levers 16, which are connected to the masses, in such a manner that they slide the governor sleeve 17 towards the left in Fig. 1.

The governor sleeve 17 engages with one end of a double armed lever 18 which is loosely disposed on an eccentric 19 and is connected by means of its bifurcated upper end with a control rod 20 which constitutes the fuel delivery adjustment member of the injection pump. When the sleeve is moved towards the left the double armed lever 18 turns in a clockwise direction on the eccentric 19, the displacement of which is prevented in a manner which is hereinafter described, and consequently the fuel delivery control member 20 is moved towards the right, thus effecting a reduction in the fuel supplied to the engine.

The eccentric 19 is loosely disposed on a spindle 21 which is mounted in the housing of the governor in a manner not shown in the drawings and

is connected by a lever 23 with a rod 24. The upper end of this rod is connected to stiffening plates 25 of a diaphragm 26 which, by a sealed joint, is fastened at its periphery to the governor housing. The diaphragm 26 thus forms a movable dividing wall between two governor chambers, the upper one of which 27, communicates through a pipe 28 with that part of the induction pipe 2 which lies behind the throttle valve 4 in the direction of flow 3 of the air. The other governor chamber lying beneath the diaphragm 26 in which is disposed the centrifugal governor, communicated through a pipe 29 with the crank case of the internal combustion engine, which is not shown in the drawings, and through this with the atmosphere. In the governor chamber 27 is disposed a spring 30 which, when the engine is at rest and a small degree of vacuum prevails in the induction pipe, holds the diaphragm 26 and the eccentric 19 in the position shown in the drawings. In this manner, while the centrifugal governor is in operation the non-governing adjustment member 26 of the fluid pressure sensitive governor serves to hold fixed the pivot 19 of the double armed lever 18 which engages with the fuel delivery control member 20.

The conditions are similar when the centrifugal governor 11 is at rest and the other governor is in operation, that is, when the engine is idling. In this case the adjustment member of the centrifugal governor, namely the sleeve 17 which is held in its right hand end position by the springs 15 holds fixed the lower end of the double armed lever 18 while the high degree of vacuum arising while the engine idling moves the diaphragm 26 upwards and turns the eccentric 19 in a clockwise direction about the spindle 21, against the force of the spring 30. Thus the lever 18 is angularly displaced in a clockwise direction about an axis constituted by its lower end to cause a movement of the control rod 20 towards the right, corresponding to the rising vacuum, and consequently the fuel supply is adjusted to the amount required when the engine is idling.

On the right hand end of the spindle 21 is fixed a lever 31 which may be operated through a rod 32 by means of a knob 33 placed within reach of the driver. By pulling the knob 33 a stop 34 on the shaft 21 (Fig. 2) may be brought into engagement with a cooperating stop 35 on the eccentric 19. As soon as the two stops come into contact further pulling of the knob 33 results in the angular displacement of the eccentric 19 against the force of the spring 30. Thus the control rod 20 may be turned into the right hand or off position independently of the two governors. In this manner the engine is turned off.

As will be seen from the large scale drawings in Figure 3, further security is provided in that the fuel supply may be turned off by hand, even when the centrifugal governor, which is designed finally to turn off the engine, is no longer capable of this duty, as would be the case if an important part of the governor were broken, to prevent the lower part of the double armed lever 18 from being fixed. This security device consists of a stop screw 39, screwed into the hub of the lever 18, the end of which projects into a slot 37 in the eccentric 19. The slot 37 extends sufficiently far around the circumference of the eccentric to ensure that its end faces do not come into contact with the stop screw 39 in the course of the normal operation of the two governors. However when the operation of the centrifugal governor as a turning off member ceases, for the reason given above, and the engine threatens to race, the eccentric may be angularly displaced, by pulling the knob 33, until the left hand end of the slot 37 comes into contact with the stop screw 39, and then by further pulling the knob 33, the lever 18 is forcibly turned until the control rod 20 comes into the stop position.

Figure 4 shows a modified form of construction of the invention. In this figure 40 is the control rod of the injection pump, 46 is the diaphragm of the fluid pressure sensitive governor and 47 the sleeve of the centrifugal governor, (not shown). The control rod 40 has a pin and slot connection with a lever 48 which is loosely disposed on a pivot 49 fixed in the casing. On the pivot 50 in the lever 48 is loosely disposed a second lever 51, one end of which is flexibly connected to the sleeve 47 of the centrifugal governor and the other end to the rod 52 of the fluid pressure sensitive governor, which leads to the diaphragm 46. A spring 53 one end of which bears on the diaphragm 46 while the other end bears on the floor of a governor chamber 54, allows the diaphragm 46 to move towards the right, as soon as the vacuum in the governor chamber 54, which communicates through a pipe 55 with the induction pipe (not shown) has risen sufficiently, for example when the engine is idling. Since the sleeve 47 holds fixed the lower arm of the lever 51 the axis of the lever 50 moves to the right, turns the lever 48 in a clockwise direction and thus adjusts the control rod so as to give the small fuel supply necessary to keep the engine ticking over.

When the engine attains its maximum speed then the governor sleeve 47 shown in Figure 4 in its position of rest, moves towards the right. If the throttle valve is completely open, or so far open that the vacuum prevailing in the governor chamber 54 is not sufficient to move the diaphragm 46 from the position of rest, then the lever 51 is caused, by the movement towards the right of the governor sleeve, to turn on its axis 56 and to carry with it the axis 50 in a direction towards the right. Consequently the lever 48 is turned in a clockwise direction and the control rod 40 is carried with it and thus reduces the fuel supply.

In this form of construction a hand operated lever 57 may be provided which shuts off the fuel supply by pushing the control rod 40 towards the right in Fig. 4. The lever 57 is generally inoperative while the two governors are working.

Figure 5 shows a centrifugal governor which, apart from a spring 15a which is compressed by the centrifugal mass 13 when a predetermined maximum speed of rotation has been attained, has also a second spring 60. This spring 60 has an initial tension which does not allow it to contract under idling conditions. However it may be compressed when the engine is rotating rapidly and it governs the fuel supply in such a manner that the injection pump can only supply to the cylinders of the engine an amount of fuel which is combustible without producing smoke at this engine speed. This device is more fully explained with reference to Figure 6.

Figure 6 is a graph in which the fuel supply mm^3 is indicated on the ordinate and the engine speed is shown on the abscissa. The line A in the graph denotes the course of the fuel supply curve of the injection pump during rising speed of rotation of the engine while the control rod remains at the fully open position. From this line A it can be seen how the fuel supply increases with the in-

crease in speed of rotation. n_1 in the graph is the minimum engine speed. n_2 is the maximum engine speed which is not to be exceeded by the internal combustion engine in question.

The line B in Figure 6 is the so called requirement curve of an internal combustion engine. It shows the maximum fuel supply which can be consumed smokelessly by this engine at a given speed of rotation. If the supply curve of the injection pump can be made to correspond to the requirement curve of the engine in such a manner that the two coincide as closely as possible, then the maximum output may be obtained from the engine with smokeless combustion at all engine speeds. This is attained by including the spring 60, as will be seen from the following. The supply curve of the injection pump and the requirement curve of the engine coincide more or less in the example shown, below the engine speed n_a. Below the speed n_a it is not necessary to adjust the curve A to the curve B. The initial tension of the spring 60 is such in these circumstances that it begins to yield to the outward thrust of the rotating weights 13 when the speed n_a is attained. The strength of the spring 60 is such that at n_2 it gives a lower fuel supply, by adjusting the control rod, so that at n_2 the amount of fuel denoted by X in the drawing is injected into the cylinder of the internal combustion engine. At this speed n_2 the weights 13 have moved outwards until they bear on the shoulders of spring plates 61 which slide on the arms 12. Above n_2 the weights 13 move further outwards and carry the spring plates 61 with them against the force of the springs 15*a*. On a further increase of the engine speed, that is when the engine is racing, the weights move sufficiently far outwards to move the control rod into the stop position.

Therefore the centrifugal governor having two built in springs 60 and 15*a* has three tasks to perform. In the first place below the speed of rotation n_a the sleeve 17 must be held in its position of rest so that at idling speed the sleeve forms a support for the governor rod leading to the fuel delivery member. Secondly, at speeds between n_a and n_2 the spring 60 yields sufficiently to allow the weights 13 to displace the sleeve 17 in accordance with the prevailing engine speed so that the control rod of the injection pump is always adjusted at least approximately to give the maximum fuel supply which can be consumed smokelessly when the engine is adjusted for full performance, that is when the throttle valve is open, and finally both springs 60 and 15*a* must yield together when the desired maximum speed n_2 is exceeded so that the fuel supply is shut off.

MAX HURST.

PUBLISHED

MAY 11, 1943.

BY A. P. C.

M. HURST

FUEL SUPPLY CONTROL APPARATUS FOR INJECTION INTERNAL COMBUSTION ENGINES

Filed Jan. 16, 1940

Serial No. 314,190

2 Sheets-Sheet 1

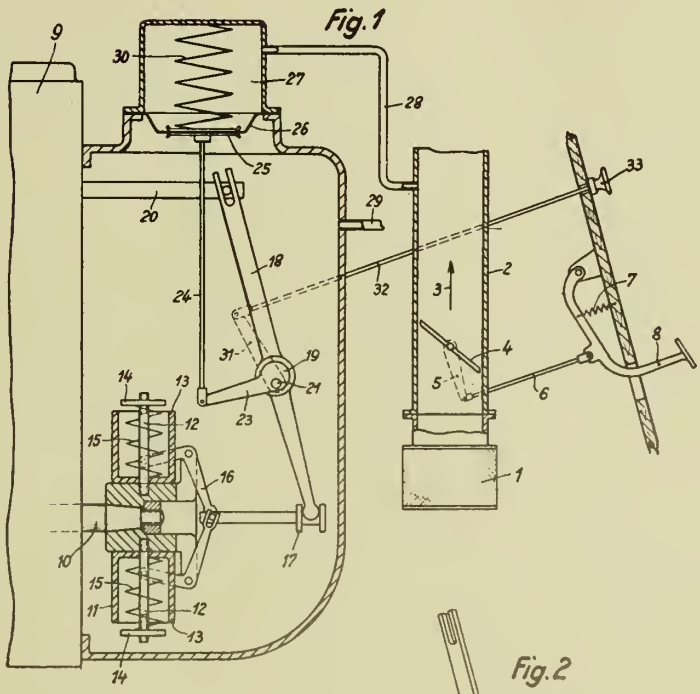

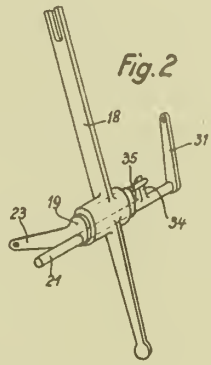

Inventor
Max Hurst
by Roy F. Steward
his attorney

PUBLISHED

MAY 11, 1943.

BY A. P. C.

M. HURST

FUEL SUPPLY CONTROL APPARATUS FOR INJECTION INTERNAL COMBUSTION ENGINES

Filed Jan. 16, 1940.

Serial No. 314,190

2 Sheets-Sheet 2

Fig. 3

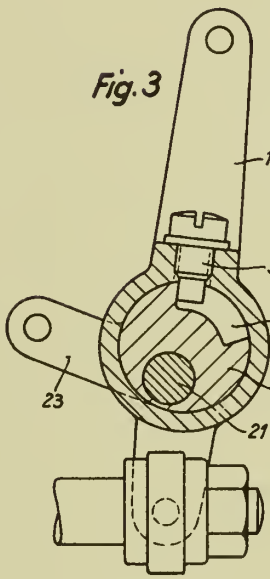

Fig. 4

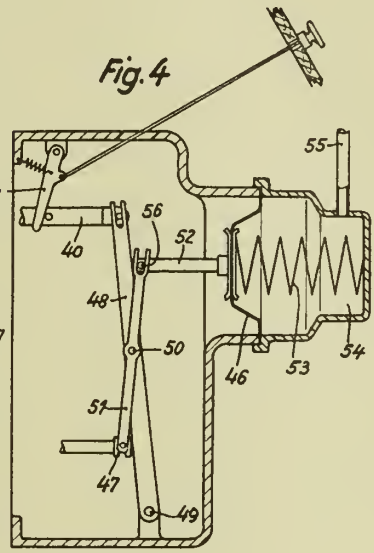

Fig. 5

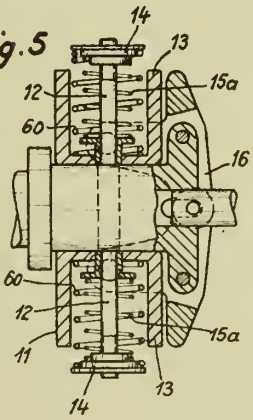

Fig. 6

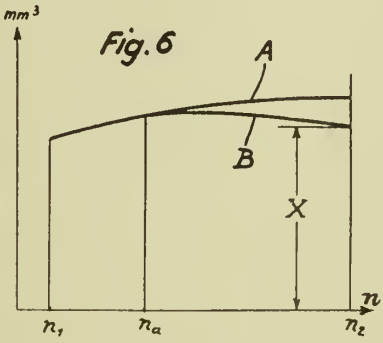

Inventor
Max Hurst
by Roy F. Steward
his attorney

Published May 11, 1943

Serial No. 315,157

ALIEN PROPERTY CUSTODIAN

GUN PERFORATOR

Marcel Schlumberger, Paris, France; vested in the Alien Property Custodian

Application filed January 23, 1940

The present invention relates to firing devices, and more particularly to new and improved apparatus for perforating metallic casings, such as, for example, as are used in oil wells.

A primary object of the invention is to provide apparatus for perforating metallic casings which is characterized by simplicity in handling and increased safety of operation.

Another object of the invention is to provide perforating apparatus which comprises a plurality of interchangeable elements which may be conveniently assembled to form a perforator of the desired character.

A further object of the invention is to provide perforating apparatus having a simplified electrical circuit for firing the gun units of the system.

One feature of the invention resides in the provision of metal perforator elements of elongated shape having at least two longitudinal powder chambers formed in the peripheral portion thereof, with at least one barrel hole extending from each chamber to the lateral wall of the element and passing through the central portion thereof.

Another feature of the invention consists in providing a perforator structure including an assembly of a plurality of elements mounted end to end in series without any common support, each of the elements being provided with elementary powder ignition means, adapted to be automatically interconnected from one block to the next one upon assembly of the series of elements so as to constitute at least one ignition circuit extending therethrough.

According to still another feature of the invention, the powder for each chamber is contained in a cartridge adapted to fit therein and each element is provided with extracting means for simultaneously removing all the cartridges in the element from their respective chambers, when it is detached from the adjacent one.

In an embodiment of the invention each powder chamber contains one cartridge and the powder in the successive cartridges is ignited by electric means.

In another embodiment, corresponding cartridge chambers of the successive blocks are adapted to communicate with one another in series and the combustion of the first cartridge of a series produces the successive ignition of the other cartridges thereof with the interposition of ignition delaying means, so as to ensure a sufficient interval of time between the firing of two consecutive cartridges.

According to an embodiment of the present invention, the connection between each chamber and the next one is inclined with respect to the axial direction of the apparatus so that the successive cartridges of the series being fired are not located along the same generatrix but are disposed along a helix.

According to still another embodiment of the present invention the apparatus includes a circuit-breaker in series with the electrical circuit which is adapted to be operated every time a cartridge is fired for the purpose of interrupting the current flowing through an indicating circuit for verification purposes.

Still another embodiment of the invention consists in the provision of a switch automatically operated by the firing of each cartridge which is interconnected with the electrical means for firing the cartridges in such a manner that the successive cartridges ignited are located on a helix instead of being located on a straight line parallel to the axis.

Other features of the present invention will become apparent from the following detailed description of several specific embodiments taken with reference to the appended drawings, in which:

Fig. 1 is a view in elevation of a perforating gun constructed in accordance with the present invention;

Fig. 2 is an end view of the gun shown in Fig. 1;

Fig. 3 is a view in longitudinal section of a portion of the perforator of Fig. 1 taken along the line 3—3 of Fig. 2;

Fig. 4 is a view in transverse section taken along the line 4—4 of Fig. 3;

Fig. 5 is a view in transverse section taken along the line 5—5 of Fig. 3;

Fig. 6 is a sectional view of a cartridge constructed according to the present invention;

Fig. 7 is a sectional view of a modified form of cartridge;

Fig. 8 is a view in section taken along line 8—8 of Fig. 7;

Fig. 9 is a view in section taken along line 9—9 of Fig. 10 and illustrating a modified form of perforator element;

Fig. 10 is a sectional view taken along line 10—10 of Fig. 9;

Fig. 11 is a view in transverse section illustrating another modified form of perforator element;

Fig. 11A is a view in section taken along line 11A—11A of Fig. 11;

Fig. 12 is a view in longitudinal section of a head element provided with an automatic circuit breaker for verification purposes;

Fig. 13 is a view in longitudinal section taken along line 12—12 of Fig. 13A, illustrating still another form of perforator element;

Fig. 13A is an end view of the perforator element shown in Fig. 13 with the cartridges in position in the cartridge chambers therein;

Fig. 14 is another sectional view taken along line 14—14 of Fig. 13A, showing a cartridge inserted in position, and illustrating the firing circuit therefor;

Fig. 15 is a view in longitudinal section taken along line 15—15 of Fig. 16 of a modified form of perforator element in which a cartridge is adapted to be ignited by the powder gases from a cartridge in a preceding element;

Fig. 16 is a front end view of the perforator element shown in Fig. 15;

Fig. 17 is a view in longitudinal section of a further modified form of perforator element;

Fig. 18 is a sectional view taken along line 18—18 of Fig. 17;

Fig. 19 is a sectional view taken along line 19—19 of Fig. 17;

Fig. 20 is a plan view of a detail of the element shown in Fig. 17;

Fig. 21 is a view in section taken along line 21—21 of Fig. 20;

Fig. 22 is a view in longitudinal section of a head element provided with a switch for controlling the order of ignition of the cartridges in the perforator elements;

Figs. 23, 24 and 25 are also views in longitudinal section of further modifications of the head element shown in Fig. 22, and

Fig. 26 is a schematic diagram illustrating the electrical firing circuits for the gun perforator shown in Fig. 1.

Considering Fig. 1, the gun perforator comprises a plurality of interchangeable perforating elements 10, 10′ and 10″, threadedly secured to one another. The lowermost perforator element 10″ is connected to an end piece 11 to which is secured a rubber guiding member 12 provided with a plurality of radial fins 13 which serve to maintain the perforator in a substantially central position in a bore hole.

The uppermost perforator element 10 is threadedly connected to a head piece 14, including a guide member 15 for the cable 16 on which the perforator assembly is adapted to be suspended in a bore hole, a coupling member 17 and two separable connector elements 18 and 19. Within the elements 18 and 19 is contained apparatus for connecting the electrical circuits of the perforator elements 10, 10′ and 10″ to the various conductors in the cable 16 as will be described in greater detail hereinafter.

Inasmuch as the perforator elements 10, 10′ and 10″ are identical in construction, it will be sufficient to describe only the perforator element 10 in detail. Corresponding parts on the elements 10′ and 10″ will accordingly be designated by the corresponding primed or double primed numbers, respectively.

Referring to Fig. 3, the perforator element 10 may comprise, for example, a cylindrical block provided with three cartridge chambers 20, two of which are shown in the figure, which are disposed parallel to the axis of the block and the axes of which pass through the apices of an equilateral triangle located in a plane at right angles to its axis. Each chamber 20 is provided with a lower tapered portion 21 terminating in a small passage 22 in the lower face of the element 20.

In this embodiment of the invention each cartridge chamber 20 is provided with a barrel hole 23 passing through the axis of the block and extending from each chamber 20 to the external wall of the block diametrically opposed thereto. The barrel holes 23 are preferably located in three different transverse planes as shown in Fig. 4. Within the barrel holes 23 are inserted the bullets 239 which are held in position by suitable plugs 240 which also serve to prevent the inflow of water into the chambers 20.

The element 10 is provided at one end with an internally threaded skirt portion 24 and at the other end wtih an externally threaded portion 25 of reduced diameter, whereby it may be secured to the adjacent perforator elements constituting the apparatus. A recess 26 is provided in the external wall of the perforator element 10 which is adapted to cooperate with a tool to be used for assembling the respective elements of the apparatus.

Within each cartridge chamber 20 is disposed a cartridge 27, shown in greater detail in Fig. 6, which is adapted to be fired electrically as described in detail hereinafer. Referring to Fig. 6, the cartridge 27 comprises a metallic tubular casing 28, the front end of which is internally threaded at 29 to receive the externally threaded portion 30 of a conical closure member 31. The rear end of the tubular casing 28 is provided with a closure member 32 within which is formed a circular aperture 33 tapering rearwardly to a restricted portion 34 which communicates with a larger circular recess 35 formed in the rear face of the rear closure member 32.

The firing device for the cartridge 27 comprises an enclosed tubular casing 36 made of some low resistance material which contains a small amount of powder 37. The powder 37 is adapted to be ignited by a wire filament 38 which is connected at one end to a conducting rod 39 and at its other end to a conducting rod 40. The conducting rod 39 extends through the tubular casing 36, through an aperture 41 in an ebonite plug 42 which is snugly fitted against the rear closure member 32 and into the recess 35. Secured at the end of the conducting rod 39 is a conical contact member 43 provided with a threaded portion 44 on which a second contact member 45 is adapted to be screwed.

The contact members 43 and 45 are maintained out of contact with the rear closure member 32 by an insulating disc 46 disposed between the rear face of the ebonite plug 42 and the rear face of the conical contact member 43 and by a ring 47 of insulating material which is inserted in the space between the second contact member 45 and the wall bounding the circular recess 35.

The conducting rod 40 extends through the other end of the tubular casing 36 and through a narrow bore 48 formed in the conical closure member 31 and it has a pointed end 49 which extends slightly beyond the forward extremity of the conical closure member 31. A sleeve 50 of insulating material is fitted on the conducting rod 40 which serves to insulate the latter from the conical closure member 31.

The pointed end 49 of the rod 40 of each cartridge 27 is adapted to bear against the contact member 45′ of the corresponding cartridge 27′ of the next perforator element 10′, so as to insure electrical contact therewith. Electric current can then flow through contact members 43 and 45, rod 39, filament 38, and rod 40 of perforator element 10, to the cartridge 27′ in perforator ele-

ment 10′, and thus to the entire series of cartridges in the assembled apparatus.

In accordance with the invention, the perforator element 10 is provided with means for extracting the cartridges 27′ from the cartridge chambers 20′ of the adjacent lower perforator element 10′. The extracting means comprises a circular disc 52 provided with a plurality of spaced semi-circular notches 53, (Fig. 4) the centers of which are disposed at the apices of an equilateral triangle, within each of which a cartridge 27 is adapted to be received. To this end, an annular recess 54 is provided about the periphery of the rear closure member 32 of each cartridge 27 within which the semi-circular boundary of a notch 53 is adapted to be received.

The disc 52 is adapted to be secured to the lower face of the perforator element 10 by means of a tap screw 55 which extends through a central bore 56 in the disc 52 into an internally threaded bore 57 in the perforator element 10. The tap screw 55 is provided with a left-hand thread and the assembly is so designed that when it has been tightened up the disc 52 may be rotated freely about its axis.

In operation, three cartridges 27′ are inserted into the notches 53 in the extracting disc 52 and the latter is secured to the perforator element 10 by means of the tap screw 55. The perforator element 10 is then brought into proximity with the perforator element 10′, for example, and the cartridges 27′ are inserted into the cartridge chambers 20′ disposed therein. The externally threaded reduced portion 25 of the perforator element 10 is then screwed into the internally threaded skirt portion 24′ of the perforator element 10′. Inasmuch as the extracting disc 52 may rotate freely about the tap screw 55, this operation may be performed with facility.

After the cartridges 27′ have been fired and the apparatus has been withdrawn from the bore hole, the perforator element 10 is unscrewed from the perforator element 10′. Since the thread on the reduced portion 25 of the perforator element is right-handed, whereas the tap screw 55 is provided with a left-hand thread, the latter cannot be unscrewed from the perforator element 10 during this operation. Hence, as the unscrewing operation proceeds and the perforator element 10 moves axially away from the perforator element 10′, the cartridges 27′ are extracted from the cartridge chambers 20′ and are retained by the extracting disc 52 from which they may be subsequently removed.

As indicated above, the uppermost perforator element 10 is threadedly connected to a head piece 14 which includes means for connecting the firing circuits of the cartridges 27 to the conductors in the cable 16. Inasmuch as the three circuit connections in the head piece 14 are identical, it will be sufficient to describe merely one.

Electrical energy for firing the cartridges 27 is supplied through the cable 16 which is provided with three conductors 58, 59 and 60 (Fig. 26), one for each series of cartridges 27 in the perforating apparatus. Each of the conductors 58, 59 and 60, respectively, is connected to a conducting rod 61 (Fig. 3) which extends through a passage 62 formed within the connector element 18 and which is insulated therefrom by means of an insulating sleeve 63. The rod 61 extends through an insulating disc 64 disposed within a circular recess 65 formed by the cooperating adjacent ends of the connector elements 18 and 19, and its upper end is connected to a contact element 66 mounted within a recess 67 in a second insulating disc 68, also disposed within the recess 65.

The contact element 66 is provided with a socket 69 within which a conducting rod 70 is adapted to be snugly received. The conducting rod 70 passes through an aperture 71 in a third insulating disc 72 disposed on the top of the insulating discs 64 and 68. The three discs 72, 64 and 68 are held tightly in position by means of the tap screws 73 which are screwed into the threaded bores 74 in the connector element 18. The conducting rod 70 extends through an insulating sleeve 75 within a narrow bore 76 in the connector element 19 and it terminates at its upper extremity in a point which is adapted to engage the contact member 45 on the cartridge 27 in the uppermost perforator element 10, which is secured to the connector element 19.

The connector element 19 is also provided with means for extracting the cartridges 27 from the cartridge chambers 20 in the uppermost perforator element 10. This means is identical with the means described above in connection with the perforator element 10.

The lowermost perforator element 10″ is provided with a circular rotatable disc 241 which is secured thereto by means of the tap screw 55″ which is adapted to be screwed into the threaded bore 57″ in the lower portion of the perforator element 10″. The circular disc 241 is provided with three sector-shaped projections 242 which are adapted to engage the pointed ends 49″ of the conducting rods 40″ in the cartridges 27″ in the lowermost perforator element 10″. The disc 241 is adapted to be maintained in close contact with the end piece 11 when the lowermost perforator element 10″ is screwed thereto and it is insulated from the lower face of the element 10″ by a rubber disc 77.

A spindle 78 is screwed into a threaded bore 79 in the end piece 11 and it extends through a central bore 80 in the guide member 12 which is secured thereon by means of a nut 81 and a washer 82 of the conventional type.

To assemble the perforating apparatus described above, the lowermost perforator element 10″ is first fixed upon a support. The cartridges 27″ for the perforator element 10″ are then mounted in the extractor disc 52′ of the next perforator element 10′ and the disc 52′ is secured thereto by the tap screw 55′. The externally threaded reduced portion 25′ of the second perforator element 10′ is then screwed into the internally threaded skirt portion 24″ of the lowermost perforator element 10″. These operations are repeated until the perforator elements 10, 10′ and 10″ have been assembled. Obviously, any number of elements may be used.

The perforator elements 10, 10′ and 10″ are so designed that, when assembled as indicated above, the cartridges 27 constitute three coaxially aligned groups. Each group of cartridges located along a generatrix of the apparatus constitutes an electric circuit extending over the entire length of the assembly, and there are three distinct electric circuits passing each through one of the three cartridge chambers 20 of each perforator element.

Th head piece 14 is then screwed in a similar manner on the uppermost perforator element 10. thus connecting the three cartridge circuits to the three conductors 58, 59 and 60, respectively, in the cable 16. At this point the three car-

tridge circuits may be tested to determine if they are operative.

When the circuit tests have been successfully completed, the rubber disc 77 and the contact disc 241 are secured to the lowermost perforator element 10'' by means of the tap screw 55'', the position of the disc 241 being such that the projections 242 thereon are in engagement with the pointed ends 49'' of the rods 40'' in the cartridges 27''. The externally threaded reduced portion 25'' of the perforator element 10'' is then screwed into an internally threaded skirt portion 83 on the end piece 11, so as to insure a good electrical contact between the disc 241 and the end piece 11.

As shown generally in Fig. 26, the conductors 58, 59 and 60 in the cable 16 are connected to the switches 84, 85 and 86, respectively, which are connected to the variable contact 87 of a rheostat 88. The rheostat 88 is connected to one terminal of a source of current 89, the other terminal of which is connected to ground 90, the circuit being completed through the earth.

In operation, the completely assembled perforator, supported on the cable 16 is lowered into the bore hole, the casing of which is to be perforated. When the desired depth is reached, the switch 84, for example, is closed, causing current to flow from the source 89, through the rheostat 88, the switch 84, the conductor 58, and through the filaments 38, 38' and 38'' of the cartridges 27, 27' and 27'', respectively. The filaments 38, 38' and 38'' are designed so that different current intensities are required to bring them to a red heat, the lowermost filament 38'' being adapted to attain a red heat at the lowest current intensity.

The rheostat 88 is adjusted to give the current intensity required to bring the lowermost filament 38'' to red heat, thus igniting the charge of black powder 37'' in the casing 36''. When the powder 37'' is ignited, the combustion thereof bursts the casing 36'' and thus transmits ignition to the explosive 51'' present in the cartridge casing 28''. The force of the explosion bursts the cartridge casing 28'' at the barrel hole 23'' and the powder gases released drive the bullet 239'' out of the barrel hole 23''.

At the time of the explosion, the ebonite plug 42'' is liquefied by the heat and pressure to which it is subjected and it pushes the insulating disc 46'' towards the rear so as to crush the metal contact member 43'' against the rear closure member 32''. The contact member 45'' is now in electrical contact with the rear closure member 32'' and with the metal of the perforator element 10'' in which the exploded cartridge 27'' is located. Since the pointed end 49' of the conducting rod 40' of the preceding cartridge 27' is now connected with the metallic mass of the apparatus the firing circuit remains closed and operative.

The rheostat 88 is then adjusted to increase the current intensity to the value required to bring the next filament 38' to a red heat, and the operations are continued until the required number of cartridges are fired. The other two series of cartridges may be fired in exactly the same manner.

Figs. 9 and 10 relate to another embodiment of a perforator element 10 constructed according to the present invention. In this modification, the perforator element 10 is provided with a plurality of cartridge chambers 91*a*, 91*b*, 91c and 91*d* (four in the particular example shown by the drawing), the axes of which are symmetrically located therein with respect to two diametral planes located at right angles to each other. The cartridge chambers 91*a*, 91*b*, 91c and 91*d* are of the same general shape as those of the preceding embodiment.

The chief characteristic of the embodiment shown in Figs. 9 and 10 is that each cartridge chamber is provided with two barrel holes. For example, chamber 91*a* is provided with the barrel holes 92*a* and 92*b*; chamber 91*b* has also two barrel holes 93*a* and 93*b*; chamber 91c is provided with two barrel holes 94*a* and 94*b*; and chamber 91*d* has the barrel holes 95*a* and 95*b*.

It will be readily apparent that, since there is an even number of cartridge chambers diametrically opposed to one another, the barrels communicating with the chambers cannot pass through the axis of the perforator element 10. As shown by the drawings, two barrel holes associated with each chamber are located respectively in two planes passing through the axis of the cartridge chamber which are symmetrical to each other with reference to the diametral plane passing through said axis. For example, the respective axes of the barrels 92*a* and 92*b* of chamber 91*a* are located in two planes which are symmetrically located with reference to the diametral plane passing through the axis of chambers 91*a* and 91c.

The construction and operation of a gun perforator having elements of this kind is wholly analogous to that described with reference to the first embodiment of this invention, with the difference that the firing of each cartridge drives two bullets into the casing.

Fig. 7 shows another embodiment of a cartridge made according to the present invention. This cartridge is adapted to be fired automatically by means actuated by the powder gases produced in the corresponding cartridge of the preceding perforator element. The cartridge shown in Fig. 7 includes a tubular metallic casing 96 having a thin walled forward portion 97 forming a main powder chamber 98 and a thicker walled rear portion 99 forming an auxiliary chamber 100 of lesser diameter.

The casing 96 is closed at its rear end by a transverse partition 101 in the rear face of which is formed a circular recess 102 which is adapted to receive a firing pin 103. The firing pin 103 is provided with a conical portion 104 which is adapted to be projected through a small aperture 105 in the transverse partition 101 against a metallic cup 106 inserted in a recess 107 formed in the transverse partition 101, which contains a small disc of mercury fulminate 108 or other similar detonating explosive.

Disposed within the auxiliary chamber 100 is a hollow tubular member 109 containing a slow fuse composition 110 and having an outwardly extending flange 111 which is screwed within the casing 96 adjacent the thicker walled rear portion 99. The tubular member 109 is externally threaded and it cooperates with the auxiliary chamber 100 to form a labyrinth-like passage 112 which communicates with the main chamber 98 through a plurality of apertures 113 formed in the flange 111 (Fig. 8).

The forward portion of the casing 96 is internally threaded at 114 to receive an externally threaded conical plug 115 having a narrow axial bore 116 within which is disposed a pin 117. The forward end of the bore 116 is normally closed

by a thin wall 118 which is adapted to be pierced by the pin 117 when the cartridge is fired.

In operation, if it be assumed that the cartridge shown in Fig. 7 is located in one of the powder chambers 20′ in the perforator element 10′, and that the preceding cartridge in the perforator element 10 has just been fired, the pressure of the powder gases therein will force the pin 117 through the wall 118 against the firing pin 103′ of the cartridge under consideration. The impact forces the conical portion 104′ of the firing pin 103′ against the cup 106′, thereby igniting the mercury fulminate 108′ therein and simultaneously igniting the fuse composition 110′ in the tube member 109′.

The fuse composition 110′ now burns at a rate depending upon the ingredients from which it is made and these may be so chosen that the ignition of the explosive in the main powder chamber 98′ will not take place until after a predetermined period of time has elapsed, corresponding to the interval which it is desired to produce between the firing of two successive cartridges. The gases produced by the burning of the composition 110′ flow into the auxiliary chamber 100′ through the labyrinth-like passage 112′ and through the apertures 113′ into the main chamber 98′. In traversing this path the gases are cooled to a considerable extent by expansion so that when they enter the main chamber 98′ they are cool enough not to ignite the explosive 51 contained therein.

The combustion of the last remnants of the fuse composition 110′ will ignite the powder in the main chamber 98′, the gases from which will force the pin 117′ through the wall 118′ to the firing pin 103″ of corresponding cartridge in the next perforator element 10″ which will then be fired in an analogous manner.

When using cartridges of the type represented on Fig. 7, each cartridge of the upper element will be fired either mechanically or electrically from the surface. For instance, the cartridges of the first perforator element will include a filament which may be ignited from the surface as shown in Fig. 6.

The embodiment illustrated in Figs. 11 and 11A of the drawings features only two cartridge chamber 119A and 119B, in each perforator element 10, the axes of which are located in a common diametral plane. In this embodiment of the invention the barrel hole communicating with each cartridge chamber does not extend straight from the wall of the perforator element, but is bent so that its main portion in which the bullet is adapted to be received is located in a diametral plane at right angles to the diametral plane of the axes of the two chambers.

For example, the cartridge chamber 119A communicates with a bent passage 120A which terminates in a barrel hole 121A extending between the two chambers 119A and 119B and at right angles to the common plane of their axes. An important feature of this modification, and of the modification described above is that it provides a maximum barrel length enabling the bullet to pass through a relatively great distance before it is projected into the casing.

Fig. 12 illustrates a modified form of connector element which is adapted to break a firing circuit each time a bullet is fired, thereby indicating to an operator at the surface that the firing operation has been successful. The general structure of the connector element shown in Fig. 12 is analogous to that of the elements 18 and 19 shown in Fig. 3 except that each of the conducting rods 61 is secured within a recess 122 in a conducting block 123 by means of a tap screw 124. The block 123 is insulated from the connector element 125 by means of the insulating material 126.

The tap screw 124 is electrically connected through a wire 127 to one contact element 128 of a conventional type mercury switch 129 which is vertically disposed within a rubber sleeve 130, and which contains just enough mercury to remain in contact with the contact element 128 when the connector element 125 is at rest. The other contact element 131 of the switch 129 is connected by means of a conductor 132 to a conductive block 133. The block 133 is connected by means of the conductors 134, 135 and 136 to the conducting rod 70 which is adapted to engage the contact member 45 on the cartridge 27 in the uppermost perforator element 10 (Fig. 3).

When the assembled perforator is at rest, the contact element 128 dips into the mercury in the switch 129 so that electric current flows normally therethrough to the firing circuit. However, when a shot is fired, the entire perforator assembly sustains a violent shock which displaces the mercury in the switch 129, thereby temporarily breaking the electrical firing circuit.

The break in the circuit may be readily indicated in any suitable manner, as, for example, by means of a receiver at the surface of the earth which is connected in series with the firing circuit. In this fashion, it is possible to check the firing of the shots by noting the break in the electrical circuit produced by the shock sustained by the perforator assembly.

Figs. 13, 13A and 14 illustrate a further modification of perforator element 10 in which three cartridge chambers 137A, 137B and 137C are provided, the axes of which are located parallel to the axis of the perforator element 10, forming the respective edges of an equilateral prism coaxial thereto. In this embodiment the cartridge chambers 137A, 137B and 137C are provided at their lower extremities with the longitudinally extending conduits 138A, 138B and 138C, respectively, which communicate with the laterally extending barrel holes 139A, 139B and 139C, respectively.

It will be noted that the conduits 138A, 138B and 138C are made of different lengths so that the barrel holes 139A, 139B and 139C lie in different transverse planes. As shown in greater detail in Fig. 13, the barrel holes 139A, 139B and 139C are located in radial planes which are disposed at an angle of 120° with respect to each other.

It will be apparent that in this modification the electrical firing circuit cannot extend longitudinally throughout each cartridge as in preceding embodiments. Accordingly, it is necessary to provide a special firing circuit as indicated in Fig. 14.

Referring to Fig. 14, a cartridge 140 is shown in position in the cartridge chamber 137B, for example, and it is provided with a thin walled forward portion 141 forming a main powder chamber 142 and a thicker walled rear portion 143 forming a passage 144. The front end of the cartridge is closed by a suitable closure member 158. Within the passage 144 is disposed a hollow tubular conducting member 145 which is provided with a metal plate 146 at the lower extremity thereof, the outer surface of both the plate 146 and the tubular member 145 being covered with suitable insulating material 147.

Disposed within the tubular member 145 and concentric therewith is a conducting rod 148 which extends for a short distance beyond the tubular member 145 into the chamber 142 of the cartridge 140, and which is provided at its lower extremity with a metal plate 149, the surface of the metal plate 149 and the conducting rod 148 being encased in suitable insulating material 150. A wire filament 151 for igniting the powder within the chamber 142 is connected at one end to the tubular member 145 and at the other end to the conducting rod 148 and the energizing circuit is traced through the conducting plate 149, conducting rod 148, wire filament 151, the tubular conducting member 145 and the plate 146.

Within the perforator element 10 are provided three longitudinally extending bores 152, the axes of which are disposed substantially at the apices of an equilateral triangle, each of which is adapted to accommodate a conducting rod 153, respectively. The rods 153 are provided with pointed ends which project slightly beyond the front and rear faces of the perforator element 10 and they are insulated from the perforator element 10 by sleeves of insulated material 154.

As shown in greater detail in Fig. 13A, each of the conducting plates 149 is provided with a projecting portion 155, and each conducting plate 146 is provided with a similar projecting portion 156. The cartridge 140 is so assembled that the projection 155 on plate 149 is disposed substantially 180° away from the projection 156 on the plate 146 and it is inserted into the cartridge chamber 137B in such fashion that the projection 156 on plate 146 is disposed adjacent the pointed end of one of the rods 153.

The perforator elements are so designed that when the element 10''', for example, is screwed into the element 10, the pointed end of the conducting rod 153''' of the perforator element 10''' pierces the insulating layer 150 covering the projection 155 of the conducting plate 149 while the pointed end of the conducting rod 153 of the perforator element 10 pierces the insulating layer 147 which covers the projection 156 of the conducting plate 146.

It will be apparent, therefore, that current flowing from the conducting rod 153''' of the preceding perforator element 10''' will pass through the conducting plate 149, the conducting rod 148, the filament 151, the tubular conducting member 145, the conducting plate 146 and the conducting rod 153 of the perforator element 10 to the contact plate 149' of the next perforator element 10'. In this fashion current is supplied to each series of cartridges 140 in the assembled perforator.

It will be noted further that in this embodiment the transmission of current does not take place along the same generatrix of the perforator. On the contrary, the current path is along one generatrix in the perforator element 10, then along a generatrix located at an angle of approximately 115° away on the next succeeding perforator element 10', and so on through the respective elements of the assembled apparatus.

In order that the cartridges 140 may be readily inserted within the respective cartridge chambers, the internally threaded skirt portion 24 of each perforator element 10 may be suitably notched, as, for example, at 157.

In operation, the current through each filament 151 is adjusted as indicated above with reference to Fig. 26 until it is of sufficient intensity to ignite the powder contained within the cartridge 140. When this occurs the pressure of the gases ruptures the forward closure member 158 of the cartridge 140, thereby forcing the projectile 239 out of the barrel hole 139B.

As soon as the projectile 239 has left the barrel hole 139A, the liquid usually present in the bore casing flows through the barrel 139B and the passage 138B into the main chamber 142 of the cartridge 140 so that the firing circuit which was broken by the destruction of the filament 151 is now completed through the liquid. In addition, the destruction of the insulating material 147 and 150 by the explosion has the effect of grounding the broken end of the firing circuit to the mass of the assembled apparatus.

Figs. 15 and 16 illustrate another embodiment of the invention in which ignition is automatically transmitted from one cartridge to another cartridge located along a different generatrix, the radial plane of which makes a given angle with the radial plane of the generatrix corresponding to the preceding cartridge. In this embodiment each cartridge 238 is provided with a forward closure portion 159 having a very narrow bore 160 formed therein. The bore 160 is adapted to register with a narrow inclined passage 161 formed in the perforator element 10, which extends to the cartridge 238' located on a different generatrix in the next perforator element 10'.

In this embodiment when the cartridge 238 is fired the powder gases pass through the narrow bore 160 in the forward closure member 159 of the cartridge 238 to the inclined passage 161 where they are allowed to expand. The expanded gases then pass to the rear end of the cartridge 238' in the next perforator element 10'. Here the gases flow through a restricted aperture 162', and through a passage 163' to the powder contained within the cartridge 238' which is ignited thereby.

The passage through the restricted bore 160 and the subsequent expansion in the inclined passage 161 produces a delay in the transmission of ignition so that a certain interval of time elapses between the firing of the successive cartridges.

In the embodiment shown in Fig. 17, the cartridge 164 is provided with a rear closure member 165 having a passage 166 therein within which is disposed an insulating sleeve 167 having a contact rod 168 therein. In this modification an extractor disc 169 is used which is provided with threaded recesses 170 within which the rear closure members 165' of the cartridges 164' for the next perforator element 10' are adapted to be screwed. Each threaded recess 170 communicates through a narrow passage 171 with a larger sector-shaped recess 172 formed in the lower face of the extractor disc 169 within which is adapted to be received a metallic plate 173 of approximately the same shape, which is enclosed in insulating material 174.

As shown in Figs. 20 and 21, a small portion of the insulation is removed from the lower face of the plate 173 forming a slot 175 and part of the insulation is removed from the upper face of the plate 173 to form a small hole 176, which is adapted to register with the narrow passage 171 in the disc 169 when the plate 173 is disposed in the recess 172 formed therein.

The cartridge 164 is provided with a forward closure member 177 made of insulating material in which is inserted a conducting rod 178. The conducting rod 178 is enclosed in a sleeve 179

of insulating material within a passage 180 in the perforator element 10 and it is provided with a pointed end which is adapted to project through the slot 175 into engagement with one of the plates 173 in the extractor disc 169. A wire filament 243 is connected between the contact rod 168 and contact rod 178 which serves to ignite the powder in the cartridge 164.

When the perforator elements 10'', 10 and 10' are assembled as in Fig. 17, it will be noted that the contact rods 178'' of the cartridges 164'' in perforator element 10'' extend through the lower slots 175'' in the insulation 174'' into engagement with the contact plates 173'', and that the contact rods 168 of the cartridges 164 in the perforator element 10 project through the upper holes 176'' into engagement with the contact plates 173'', as shown in Fig. 18. Similar connections obtain between the perforator elements 10 and 10', as indicated in Fig. 19, so that three continuous firing circuits are produced in the assembled perforator.

It will be apparent that in this modification the successive cartridges 164 through which the firing current passes are located in different radial planes, the angle between the two successive radial planes being approximately equal to the angle subtended by the contact plate 173.

In all of the embodiments described above, three or more electrical circuits in the assembled perforator are electrically connected to three or more conductors in the cable 16. If desired, however, a single conductor might be used, together with mechanism as indicated in Figs. 22 to 25, inclusive, which is adapted to connect the cable successively to each of the circuits in the perforator assembly. These modifications are designed to switch the connection automatically from one series of cartridges to the next whenever a shot is fired.

Referring to Fig. 22, the connector element 18 is formed with a shouldered portion 181, on which a metallic sleeve 182 is adapted to be rotatably mounted. Within the lower portion of the sleeve 182 is disposed an insulating sleeve 183 in which is embedded a conducting ring 184. The conducting ring 184 is electrically connected through a conductor 185 to a conducting sector 186 which is also embedded in the insulating material 183. The conducting ring 184 is maintained in engagement with a contact rod 187 which is electrically connected to an axial conducting rod 188 connected at its upper extremity to a conductor 58 is the cable 16. The conducting rod 187 is insulated from the mass of the perforator element by an insulating sleeve 189 and the axial conducting rod 188 is insulated in a similar manner by an analogous insulating sleeve 190. Each of the conducting rods 70 which carry current to the respective cartridge circuits, has secured thereto a radially extending contact rod 191 which is disposed within an insulating sleeve 192 and which is adapted to engage the contact sector 186 as the sleeve 182 is rotated with respect to the connector element 18.

The connector element 18 is provided with a portion 193 of reduced diameter on which is disposed a coil spring 194, one end of which is secured to the connector element 18 at the point 195 and the other end of which is secured to a link 197 which is connected to the rotatable sleeve 182 at the point 196. The spring 194 tends to rotate the sleeve 182 with respect to the connector element 18.

The rotatable sleeve 182 is provided with a plurality of longitudinal extending teeth 198 which are adapted to be received in corresponding recesses 199 formed in a sleeve 200 which is carried on the connector element 18 so as to be slidable axially without rotation thereupon. The sleve 200 is normally urged downwardly by means of a coil spring 201, thereby engaging the teeth 198 on the sleeve 182 in the recesses 199 provided in the sleeve 200, and locking the sleve 182 in position. Mounted on the sleeve 200 is a rubber ring 202 which is of substantially the same diameter as the diameter of the bore hole.

Before a cartridge may be fired, the position of the sleeve 182 with respect to the connector element 18 must be such that one of the contact rods 191 is in engagement with the sector 186. When this condition obtains, a circuit is completed from the conductor 58 through the conducting rod 188, contact rod 187 engaging contact ring 184, conductor 185, contact segment 186 engaging contact rod 191, and contact rod 70 to a cartridge circuit.

When a cartridge in this circuit is fired the powder gases issuing from the corresponding barrel exert an upward thrust on the ring 202, thereby causing the teeth 198 to become disengaged from the recesses 199 and permitting the sleeve 182 to rotate with respect to the connector element 18. However, as soon as the energy in the gases has been dissipated the spring 201 returns the sleeve 200 to its normal position, thereby engaging the teeth 198 in the recesses 199 and again holding the sleeve 182 in fixed position.

The tensions in the springs 194 and 201 are such as to permit the sleeve 182 to rotate through a sufficient angle after it has been released to move the sector 186 out of engagement with the rod 191 and into engagement with the rod 191 of the circuit corresponding to another group of cartridges.

In the modification shown in Fig. 23, the conducting rod 188 which is in electrical connection with the conductor 58 of the cable 16 terminates in an enlarged portion 203, the lower surface of which is curved at 204 and which is adapted to engage a spherical conducting ball 205. The conducting ball 205 rests upon a cup-shaped member 206 provided with a tubular shaft 207 which is movable axially in a bushing 208 secured within a tubular member 209 fixed to the connector unit 18, and insulated therefrom by an insulating sleeve 244.

The tubular element 209 is provided with an outwardly extending flange 210 at the lower extremity thereof which is adapted to seat a compression spring 211, the upper end of which is seated in an annular recess 212 formed in the lower face of the cup-shaped member 206, thereby maintaining the spherical ball 205 in good electrical contact with the enlarged portion 203 of the conducting rod 188.

At the lower end of the tubular portion 207 on the cup-shaped member 206 is fitted a contact plate 213 which is continually engaged by the actuator 214 of a commutating switch 216. The actuator 214 is made of conductive material and it serves to complete the circuit from the conducting plate 213 to one element of the switch 216. The switch 216 is adapted to connect the conducting rod 188 selectively to the various conducting rods 70 corresponding to the respective groups of cartridges in the assembled perforator.

In operation, when a cartridge is fired, the impact moves the spherical ball 205 laterally rela-

tively to the perforator assembly thereby moving the cup-shaped member 206 axially against the force of the compression spring 211. This action depresses the actuator 214 of the switch 216 thereby connecting the conducting rod 188 to the next series of cartridges which are to be fired.

The modification illustrated in Fig. 24 is similar to that shown in Fig. 23 except that the spherical ball 205 is replaced by a cylindrical conducting mass 217 which is elastically suspended in the connector element 18 by suitable supports 218 made of resilient material, such as, for example, rubber. In this modification the switch 216 is provided with an extended actuator 219 which projects into a conical recess 220 formed in the lower face of the cylindrical mass 217. As in the previous case, when the gun is fired, the mass 217 is moved laterally and the conical recess 220 therein depresses the switch actuator 219, thereby disconnecting the conducting rod 188 from one cartridge circuit and connecting it to a different cartridge circuit.

The modification shown in Fig. 25 is similar to that shown in Fig. 22. In this embodiment, however, the sleeve 182 is adapted to be rotated with respect to the connector element 18 by means of a coil spring 221 which is secured on the connector element 18 at the point 222. The interior wall of the sleeve 182 is provided with a plurality of spaced recesses 223 within which a transversely extending rod 224 is adapted to be received for the purpose of holding the sleeve 182 in fixed position. The rod 224 is continually urged into engagement with the recess 223 by means of a compression spring 225, the lower end of which is seated within an annular recess 226 formed in the wall of the connector element 18 and the upper end of which is seated against a disc 227 secured to the rod 224.

A large mass 228 is suspended within the connector element 18 on an elastic cable 229 and it is connected at its lower end by means of a cable 230 to one arm 231 of a bell crank mechanism 232 which is pivoted at 233. The other arm 234 of the bell crank mechanism 232 is provided with a slot 235 within which a pin 236 on the rod 224 is adapted to be received. The conducting rod 188 which supplies current to the cartridges is connected by means of a conductor 237 to an insulated conducting rod 187 which is maintained in contact with the conducting ring 184 in the sleeve 183.

In operation, when the gun is fired, the shock imparted to the perforator assembly causes the mass 228 to move laterally within the connector element 18. In so moving the mass 228 causes the bell crank mechanism 232 to pivot about the point 233, thereby moving the arm 234 downwardly and disengaging the rod from its recess 223. This permits the sleeve 182 to rotate under the influence of the compression spring 221 through a sufficient distance to bring the conducting sector 186 into engagement with the conducting rod 70 corresponding to the next cartridge circuit which is to be energized. By this time the weight 228 has returned to its normal position and the rod 224 is again moved into engagement with a recess 223 by the compression spring 225.

MARCEL SCHLUMBERGER.

PUBLISHED

MAY 11, 1943.

BY A. P. C.

M. SCHLUMBERGER

GUN PERFORATOR

Filed Jan. 23, 1940

Serial No.

315,157

4 Sheets-Sheet 1

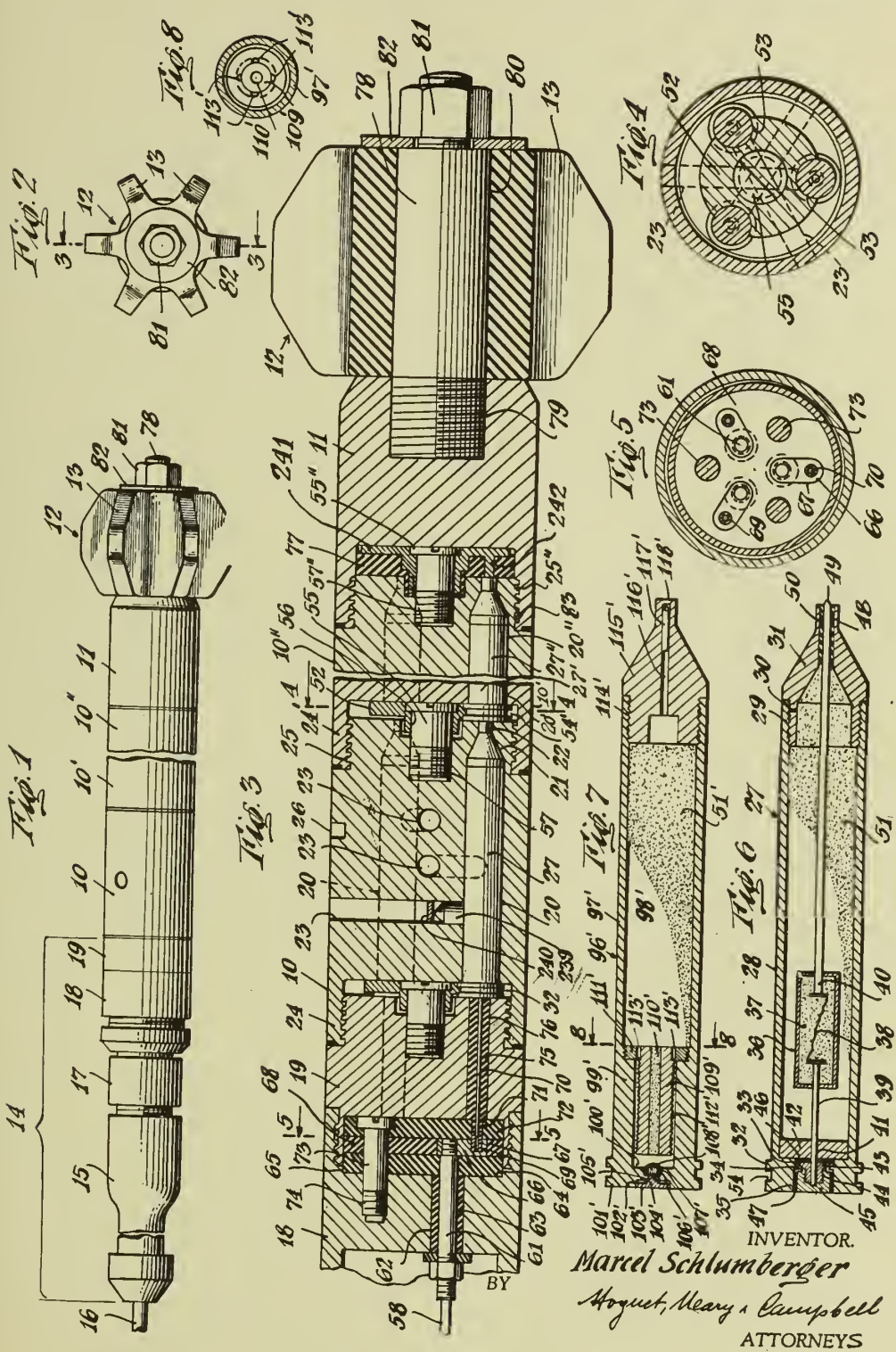

INVENTOR.

Marcel Schlumberger

BY

Hoguet, Meary & Campbell

ATTORNEYS

PUBLISHED
MAY 11, 1943.
BY A. P. C.

M. SCHLUMBERGER
GUN PERFORATOR
Filed Jan. 23, 1940

Serial No.
315,157
4 Sheets-Sheet 2

Fig. 9

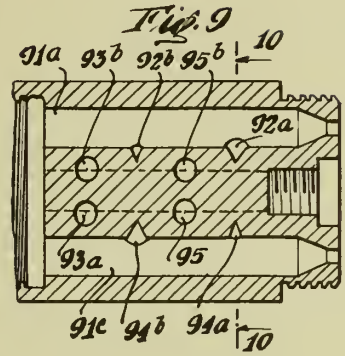

Fig. 10

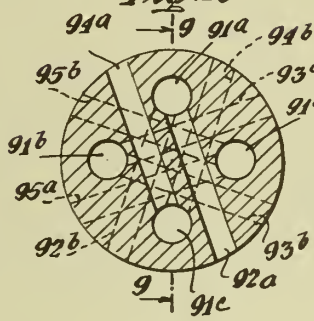

Fig. 11

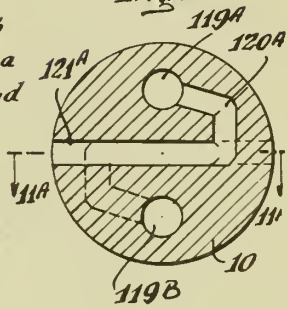

Fig. 13

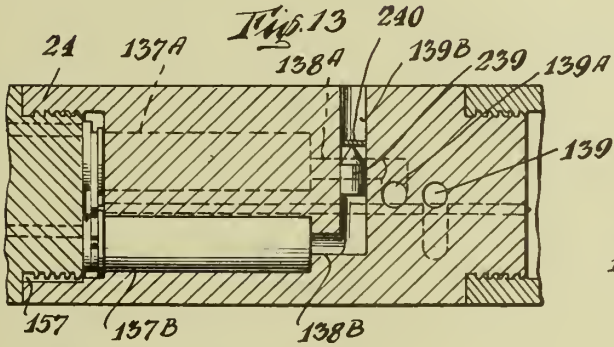

Fig. 13A

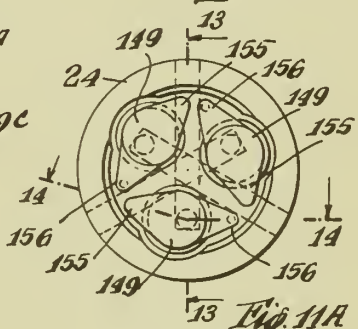

Fig. 14

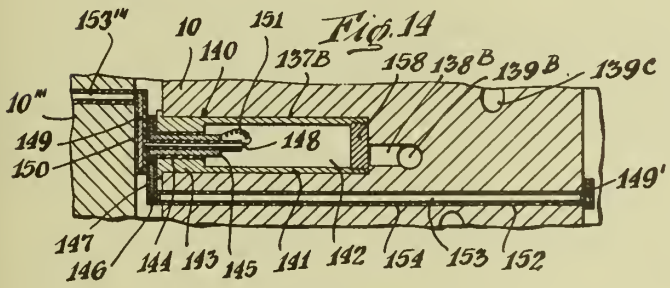

Fig. 11A

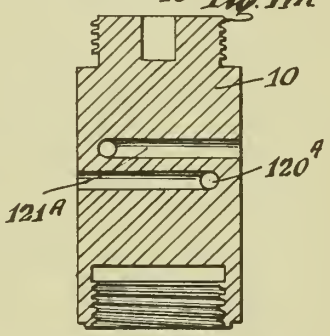

Fig. 15

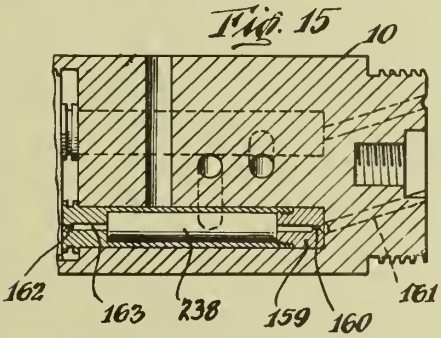

Fig. 16

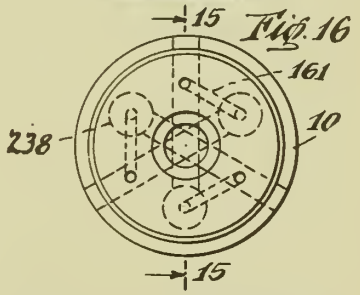

INVENTOR.
Marcel Schlumberger
BY
August, Mearg & Campbell
ATTORNEYS

PUBLISHED
MAY 11, 1943.
BY A. P. C.

M. SCHLUMBERGER
GUN PERFORATOR
Filed Jan. 23, 1940

Serial No.
315,157
4 Sheets-Sheet 3

Fig. 17

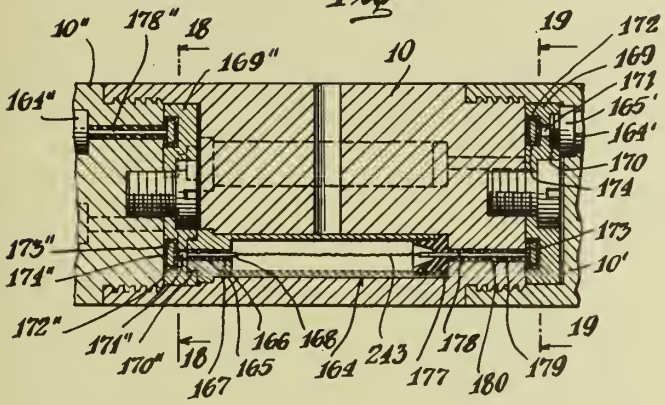

Fig. 18

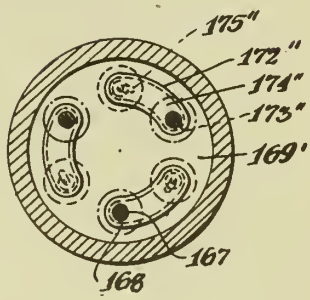

Fig. 20

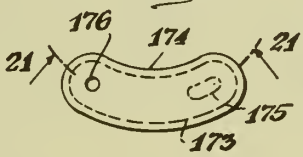

Fig. 21

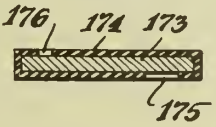

Fig. 19

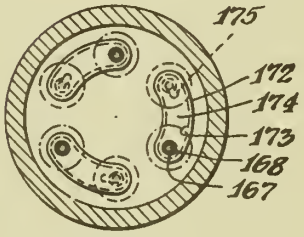

Fig. 12

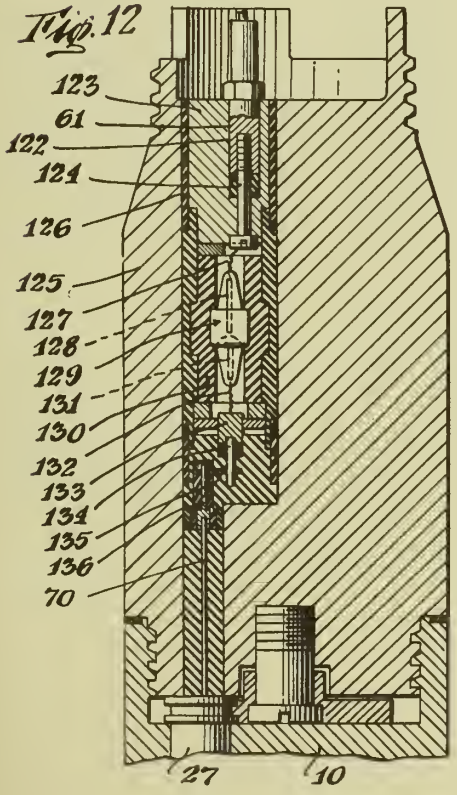

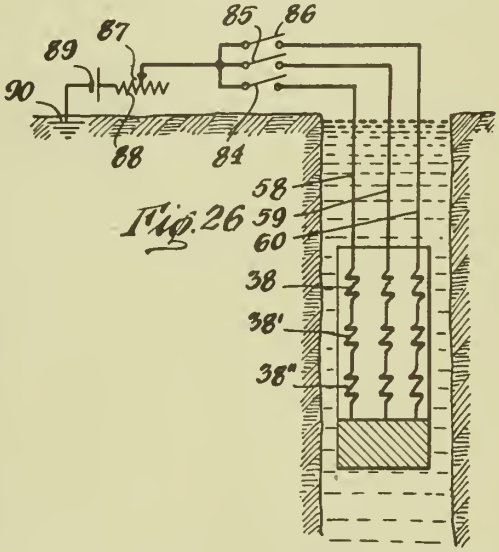

Fig. 26

INVENTOR.
Marcel Schlumberger
BY Hoyt, Meary & Campbell
ATTORNEYS

PUBLISHED
MAY 11, 1943.
BY A. P. C.

M. SCHLUMBERGER
GUN PERFORATOR
Filed Jan. 23, 1940

Serial No.
315,157
4 Sheets-Sheet 4

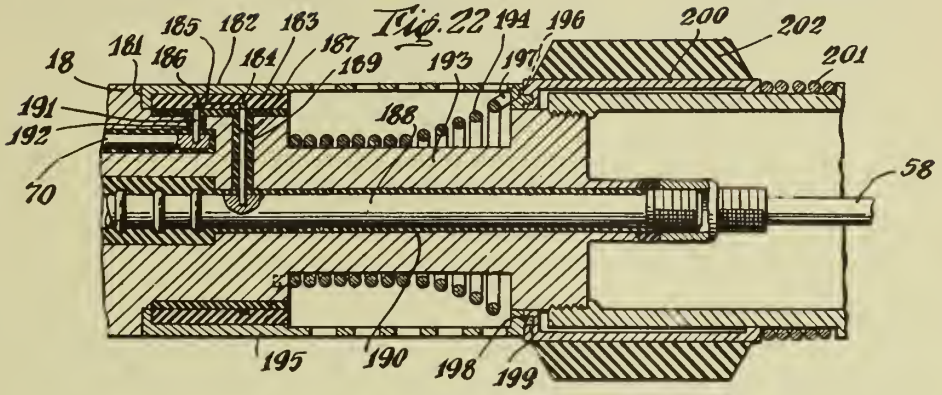

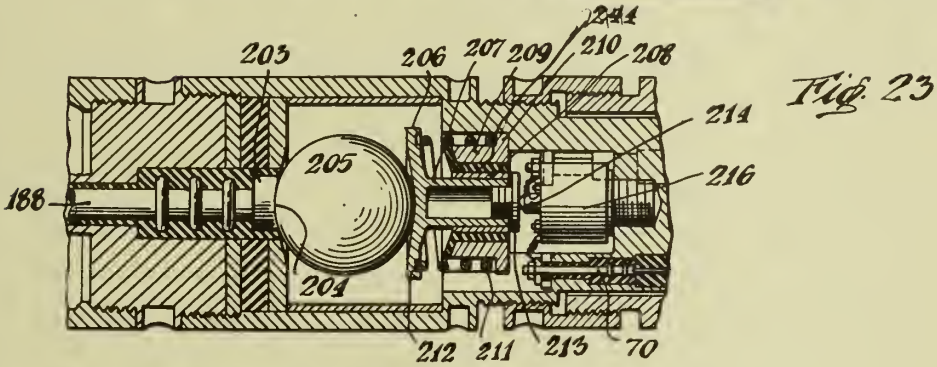

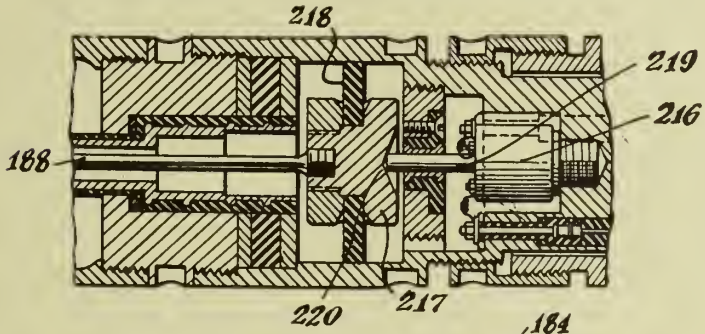

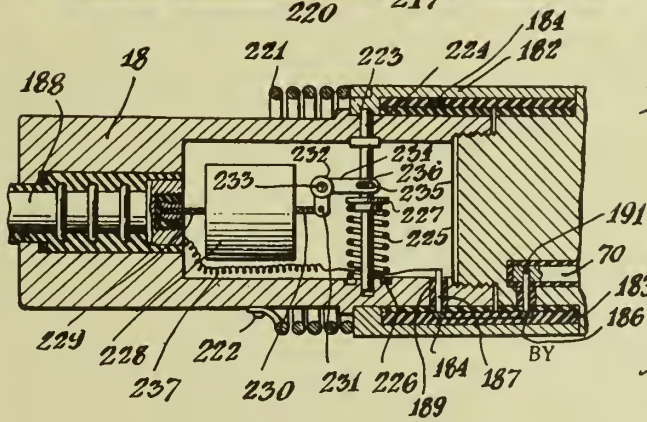

INVENTOR.
Marcel Schlumberger
Mergnet, Meany & Campbell
ATTORNEYS

Published May 11, 1943

Serial No. 315,184

ALIEN PROPERTY CUSTODIAN

PROCESS FOR THE PRODUCTION OF COLOURED PROTECTIVE LAYERS ON CASTINGS, ESPECIALLY DIE-CASTINGS, OF MAGNESIUM BASE ALLOYS

Gustav Siebel and Eduard Nachtigall, Bitterfeld, and Hermann Kocher, Dessau-Haideburg in Anhalt, Germany; vested in the Alien Property Custodian

No Drawing. Application filed January 23, 1940

This invention relates to a process for the production of coloured protective layers on castings, especialy die-castings, of magnesium base alloys.

For the production of objects, such as casings, fittings and the like, for example mounts for field-glasses, cast magnesium base alloys are being used to an increasing extent especially in the form of pressure die-castings. For such pressure die-castings, magnesium base alloys are generally used which contain, in addition to other alloying constituents, at least 4% of aluminium.

In order to impart to the surface of the metal a uniform appearance and at the same time adequate resistance to corrosion, it is customary to subject the surface of the cast objects to dipping or pickling treatment with known agents, such as dichromate solutions. It has however hitherto been impossible, with the known dips to obtain a layer of uniform, flawless appearance on the surface of the casting; moreover it was not possible to obtain uniform surface layers of dark to black coloration on pressure die-cast objects consisting of magnesium base alloys having an aluminium content of over 4%. Since in many cases a uniformly coloured protective layer is of importance, the practice has been to apply suitable colour lacquers on to the layers by brushing or spraying. It has been found, however, that such lacquer films frequently possess insufficient powers of adhesion to the previously treated metal surface and readily crack and peel off during subsequent machining of the objects.

The present invention aims at obviating the foregoing drawbacks and at providing a simple process of producing homogeneously coloured protective layers on castings of magnesium base alloys.

To this end, according to the invention, water-soluble organic colouring materials which are not decomposed by chromate salts are added to the per se known dips or pickling baths, preferably consisting of solutions containing dichromate and sulphate ions.

It has been found convenient to carry out the process in two stages, by first treating the objects in one of the per se known dips and thereupon allowing a dilute dichromate solution containing the organic colouring matter in solution, for example a sulphurised nigrosin or indulin base, to act on the thus previously pickled metal surface, without previous rinsing.

The dipping and/or colouring treatment is or are preferably, but not necessarily, carried out at temperatures which lie a little beneath the boiling point of the solutions employed. By the single or two-stage processes carried out in accordance with the present invention, homogeneous coloured protective layers, which adhere firmly to the metal and at the same time afford to the metal a high degree of protection from corrosion, are obtained.

The adhesion of the protective layer to the surface of the metal is not impaired in any way by the embedded colouring matter.

Example 1.—A field-glass mount, consisting of a pressure die-casting (magnesium base alloy containing 8% of aluminium) is treated, after being pickled bright for a few seconds in nitric acid of about 8% strength and then rinsed with water, with an aqueous solution containing 100 grams of a mixture of 70 grams of magnesium sulphate and 30 grams of dichromate per litre at a temperature of 90° C. After 30 minutes the object is removed from the solution and, without previous rinsing, is dipped in a colouring bath heated to a temperature of 90° C. and containing 50 grams of sodium dichromate and 20 grams of water-soluble nigrosin (see "Farbstofftabellen" Gustav Schultz, 6th edition, 1931, No. 986) per litre of aqueous solution, and is left therein for 15 minutes. After removal from the bath, the casting is washed for a short time in hot water and air-dried. The deep black, tightly adhering protective layer deposited on the metal has a matt appearance and protects the surface of the casting in a high degree against corrosion.

Example 2.—A casing of a wireless apparatus, consisting of a pressure die-casting (magnesium base alloy containing 9% of aluminium and 1% of zinc), after being pickled for a few seconds in nitric acid of about 8% strength and subsequently rinsed with water, is dipped into an aqueous solution heated to a temperature of 95° C. and containing 120 grams of a mixture of 50 grams of sodium dichromate, 50 grams of sodium sulphate and 20 grams of water-soluble indulin (see Farbstofftabelen" Gustav Schultz, 6th edition, 1931, No. 984) per litre, and left therein for 45 minutes. After removal from the bath the casting is briefly washed in hot water and air-dried. A firmly adhering pickling layer of uniform dark-blue colouration is obtained on the surface of the casting.

GUSTAV SIEBEL.
EDUARD NACHTIGALL.
HERMANN KÖCHER.

Published May 11, 1943

Serial No. 316,577

ALIEN PROPERTY CUSTODIAN

VEHICLE MOVING ON RAILS

Rudolf Fuchs, Brunn, Moravia; vested in the Alien Property Custodian

Application filed January 31, 1940

This invention relates to a vehicle moving on rails, which is formed so as to allow running at high speed. According to the invention, this is obtained by that the lower part of the vehicle is submerged between the rails. Thereby, it is achieved that the centre of gravity of the vehicle lies very deep with regard to the rails, to which is due the high stability of the vehicle. The particular arrangement of the vehicle will permit to provide, besides the wheels with horizontal axes, a few pair of wheels having vertical, or almost vertical, axes, such wheels being supported by the inner or outer surfaces of the rails. In this way, the lateral pressures are efficiently parried.

In the drawing, an embodiment of a vehicle according to the invention is depicted by way of example, Fig. 1 showing a side view and Fig. 2 showing a back-view of the same. In Fig. 2, the back-wall of the vehicle is partly broken off so as to discover the arrangement of the wheels. Preferably, the shape of the vehicle resembles that of a cigar. At *b* two couples of wheels are arranged which rest on rails *a*. At *d*, the lower portion of the vehicle is submerged between the rails so that the centre of gravity of the vehicle, relatively to the upper edge of the rail lies deeper than it is the case with the usual railway carriages. In order to have sufficient room for the submerged portion of the vehicle, it is advisable not to lay the rails direct on the ground, but to arrange them on standards standing on the soil. In the submerged portion of the vehicle are arranged couples of wheels *c* having vertical axes. Such wheels *c* are supported by the inner faces of the rails *a*, and will parry lateral pressures. Support of the wheels may, however, also be effected by suitably shaping, and arranging, these wheels on the outer surfaces of the rails.

The wheels *c* may be of conical shape and arranged sloping in respect of the vertical plane. Due to the said support, derailment owing to curves, or wind pressure, is rendered impossible. On the other hand, the stability of the carriage and lack of perturbation will allow to maintain extraordinary high speed. The vehicle according to the invention may be driven by a propeller *f*, and the wheels or a few of the wheels may be provided with a rubber or like tire.

RUDOLF FUCHS.

PUBLISHED

MAY 11, 1943.

BY A. P. C.

R. FUCHS

VEHICLE MOVING ON RAILS

Filed Jan. 31. 1940

Serial No.
316,577

Fig. 1

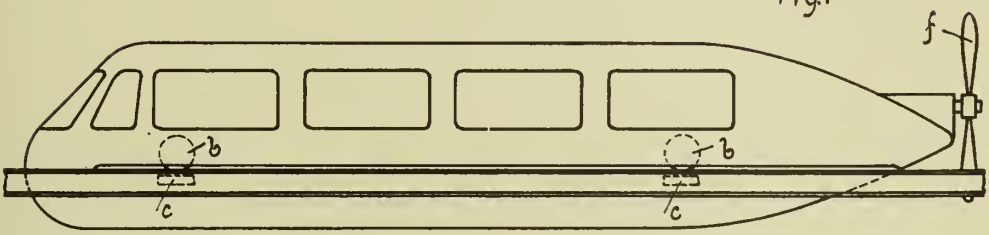

Fig. 2

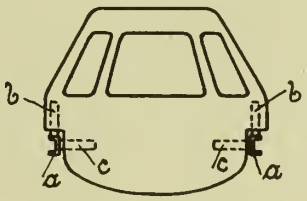

Inventor:
Rudolf Fuchs.
J. Fuchs
Attorney.

Published May 11, 1943

Serial No. 316,636

ALIEN PROPERTY CUSTODIAN

BUILDING PLATE

Artur Schumann, Kustrin-Neustadt, Germany; vested in the Alien Property Custodian

Application filed January 31, 1940

Plates for building purposes are known which consist of an armouring and of a filling substance, the armouring being encased inside the filling substance. The known plates are not always advantageous because, owing to the position of the armouring in the neutral fibre of the cross section, the resistance against bending is not high enough. If the armouring consists of iron, for example iron wires or wire netting, the plate cannot be cut and planed, and it can be nailed only to a limited extent and is also expensive.

These disadvantages are obviated by increasing the bending strength in arranging thin plates of veneer wood on both sides of the filling substance, which consists of saw dust with a binding medium, for example gypsum, and in attaching, for example, gluing, waste wood strips, preferably waste veneer wood strips, to the mentioned plates of veneer wood, in this way forming the armouring. The waste wood strips are arranged so as to cross the fibres of the veneer plates. The preparation of the plate according to the invention is comparatively simple. As only waste wood strips of a low value are used, for example waste ledges, veneer wastes or the like, which are obtained in squaring timber, the cost of making the plate is comparatively low. Of course, veneers may be used instead of the waste wood strips, in which case, however, the cost of making the plate according to the invention will not be as low as when using ordinary waste strips.

The subject of the invention is illustrated by way of example in the accompanying drawing in which:

Fig. 1 is a plan view of a plate according to the invention, and

Fig. 2 is a cross section of the plate on the line II—II of Fig. 1.

In the drawing, *a* and *b* indicate thin wood layers, preferably veneer plates, *c* is a filling substance, *d* and *e* are waste wood strips (waste veneer strips) spaced at a distance from each other.

According to the invention, the waste wood strips *d* and *e* are glued on to the veneer plates *a* and *b*. This is done so that the waste wood strips cross the direction of the fibres of the veneer plates. The direction of the fibres of the veneer plate *a* is indicated at *g* in Fig. 1. Thus, each of the veneer plates *a* and *b* is highly strengthened by the waste wood strips glued on.

According to the invention, two veneer plates with glued on waste wood strips are combined to form a building plate by means of a filling substance consisting principally of saw dust. As binding medium for the saw dust and at the same time as means for combining the two veneer plates, for example cement, gypsum, bitumen, asphalt, artificial resin, albumen, casein, watergiass, dextrine, light cements and the like are used. A building plate made in this way may be readily sawed, planed, nailed or worked in any other way.

The arrangement of the waste wood strips is made, as will be seen from the drawing, so that the waste wood strips of the plate *a* alternate with the waste wood strips of the plate *b*, leaving corresponding spaces.

The building plate according to the invention is made in the following way:

First the veneer plate *b*, for example, is placed with the waste veneer strips *e* at the top on a support, and then the filling substance *c*, mixed with the binding medium, is applied in a thick layer of, for example, 1 to 2 cm. height Then, the veneer plate *a* is placed with the waste veneer strips *d*, which are glued on to the plate, upon the filling substance, and the whole is pressed together. An important advantage in using waste strips consists in the fact that these have at least one rough or uneven edge, as indicated at e_1, whereby a particularly tight and fast anchoring of these waste strips in the filling substance is obtained.

Instead of single veneer plates *a* and *b*, it is, of course, possible to use several veneer plates glued together, so-called plywood plates, which, however, raises the cost of making the building plate.

If, for special purposes, the tensile strength of the building plate in the direction of the fibres *g* of the veneer plates *a* and *b* should not be sufficient, there may be arranged waste veneer strips in the middle of the plate in the direction of the fibres *g*, as indicated at *h*.

The building plate according to the invention is suitable for many purposes, such as walls, wall panels, ceilings, furniture parts and the like, and, besides its cheapness, it has the advantage of being very strong and highly resistant to weather influences. It does not become distorted and may be easily polished.

ARTUR SCHUMANN.

PUBLISHED
MAY 11, 1943.
BY A. P. C.

A. SCHUMANN
BUILDING PLATE
Filed Jan. 31, 1940

Serial No.
316,636

Fig. 1

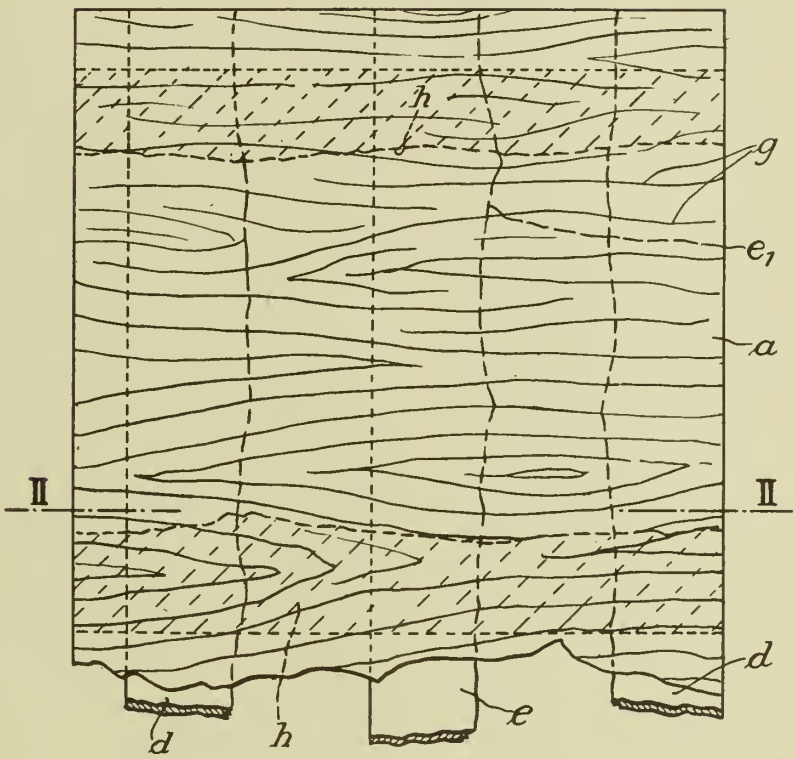

Fig. 2

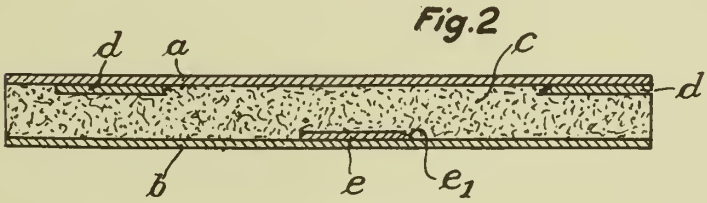

Inventor,
A. Schumann
By:
Glascock Downing & Seebold
Attorneys.

Published May 11, 1943

Serial No. 316,697

ALIEN PROPERTY CUSTODIAN

ACTING DEVICE FOR CENTRIFUGAL FORCE PERCUSSION APPARATA

Giosuè Pinazza, Milan, Italy; vested in the Alien Property Custodian

Application filed January 31, 1940

There are already known percussion appliances in which the percussion force is the resultant of the centrifugal forces of eccentric masses rotating in the percussor. There are also known appliances in which the rotation of the masses is not uniform, but is periodically accelerated and retarded during each rotation of the masses, so that the aforesaid resulting force has a great intensity in the direction of the useful percussion, namely of the forward stroke of the percussor and has a small intensity in the opposite direction, namely of the backward stroke of the percussor. In order to obtain such variable rotation, there have been used in the appliances contrived till the present time exclusively drive chains, which set in action the masses by engaging into chain wheels which form a sole mass with them.

The present invention is concerning a device for acting appliances having the construction spoken of, by means of which the velocity of rotation of the masses can be varied not only according to what said here above, but also according to other laws and, moreover, one obtains for the apparatus a more simple, a more compact and a more resistant structure, which is very suitable for high power, too.

The fundamental feature of the invention consists in the fact, that the driving shaft is being connected to the rotating masses through the medium of at least one couple of crank arms, one of which being connected with the driving shaft and rotating uniformly, and the other being connected solidarily to the masses; the lengths of these crank arms standing one with respect to the other in a periodically variable ratio during each rotation of said arms and of the masses.

In such a way, as the rotation of the driving crank arms, which are connected with the driving shaft, is an uniform one, and as the relation between the lengths of these arms and those of the driven crank arms, which are connected with the masses, is varying during the rotation, the angular velocity of rotation of the masses proves to be necessarily variable, exactly as desired. Furthermore, there exists a perfect correspondence between the law of variation of said relation between the lengths of the crank arms and the law of variation of the angular velocity of the masses; so that, in order to obtain a certain degree of variation of the angular velocity of the masses, it is sufficient to establish a corresponding degree of variation of the said relation between the arm lengths.

The rotating axle of each crank arm connected with the driving shaft is firmly fixed on to the body of the apparatus, so that it does not change position with reference to it. Whilst the axle of rotation of each crank arm connected with the eccentric masses is continually oscillating together with the percussor, given that these masses are journalled on it.

A second feature of invention consists in the fact, that the periodical variation of said ratio existing between the lengths of the crank arms is being obtained by means of the relative position of the axle of rotation, fixed on the body of the apparatus, of each crank arm connected with the driving shaft, in respect of the middle position of the rotation-axle of the corresponding crank arm connected with the masses, namely to the position standing midway of the amplitude of oscillation of this axle.

Thus, according to the effect desired, the position of the axle of rotation of each driving crank arm connected to the driving shaft will coincide with the said middle position of the rotation-axle of the corresponding driven crank arm connected to the masses, or it will be situated, with respect to the percussion or oscillation axle of the percussor, longitudinally and/or transversally shifted in relation to the same aforesaid middle position of the axle of rotation of the corresponding driven crank arm. Among the many and different cases that in practice may occur, it is of particular interest the one already taken into consideration at the beginning of the present description, where may be desired, that the rotation of the masses is accelerated during the forward stroke of the percussor and retarded during its backward stroke, for the purpose already stated.

The connection between each driving crank arm and the corresponding driven crank arm can take place immediately, namely by direct engaging of one arm into the other, or also mediately, namely by interposing other connecting elements, and this according to requirements, both of constructive nature and relating to the various and manifold applications of the invention. Obviously, the first direct engaging will be, for its simplicity, the one to be preferred, and in this case it will be sufficient that the point where the crank arms engage into each other could be shifted along the said arms.

The periodical variations of the velocity of the masses have the tendency of acting upon the driving cranks and of modifying their uniform rotating motion. In order to eliminate this effect and to free in some degree the driving shaft

from the torsional strains resulting therefrom, and in order to preserve a constant and uniform rotation of this shaft, the crank arms connected with the driving shaft are, according to invention, jointly provided with eccentric masses acting upon them as stabilizing fly-wheels.

The masses may be so arranged, that their centers of gravity should all be rotating on the same plane, or in parallel planes respectively, and all of them in the same direction, or some in one sense and the others in the opposite one. In certain cases, f. instance when the centers of gravity are moving in parallel planes, the masses give way to torsional moments or to moments of deviation, which tend to cause the apparatus either alternatively to rotate around the percussion axle or alternatively to deviate from said axle, respectively. According to the invention, these disturbances are mediately at once equilibrated through the said eccentric masses applied jointly to the driving crank arms, by utilizing the moments with which they are acting upon the body of the apparatus by the medium of the pins of rotation of the arms which are bearing them.

Other less outstanding features, of a structural nature, of the invention, will be put in evidence during the description that follows and which is referring to some practical examples. The examples are illustrated in the drawings enclosed, where they exactly represent:

Fig. 1, schematically, an elementary realisation, illustrating the fundamental idea of the invention;

Fig. 2 the axial section of a first executive example of the invention;

Fig. 3 presenting a view at a right angle with that of Fig. 2, partially in section, of the same executive example;

Fig. 4 illustrating a particular of the example of Figs. 2 and 3; and

Fig. 5, a cross-section, partial, of this particular;

Figs. 6 and 7, in analogous views to those of Figs. 2 and 3, another example of the execution of the invention;

Fig. 8 presenting a schematical front view, a variant of the disposition of the eccentric masses rotating in the percussor;

Fig. 9, in axial section, another example of driving crank;

Fig. 10, in front view, a variation of the example of Fig. 9.

In the Fig. 1, where the invention is being realized in its simplest expression, there is indicated by 1 one of the eccentric masses, by 2 its pin of rotation on the percussor and by 3 the driving shaft. By $p—p$ is stated the axle of oscillation of the percussor which constitutes also the axle of oscillation of the pin 2; by 2*a* and 2*b* are indicated with dotted lines the extreme positions that the pin 2 is reaching during oscillation. Its central or middle position does correspond to the axle 0, equidistant from the positions 2*a* and 2*b*. The mass 1 is firmly provided with a crank arm 4, the pin 5 of which runs freely in a slot 6 provided radially in a crank arm 7, set up rigidly on the driving shaft 3. The position of this shaft, the axle of which is fixed on the body of the apparatus, is established by the carthesian coordinates x, y in respect to the axle $p—p$ and to the central position 0 of the pivot 2. Upon the choice of these coordinates depends the degree of variation of the rotation velocity of the mass 1. In the case illustrated, if the rotation takes place in the direction of the arrow, the rotation of the mass is substantially being retarded in the lower part and on the left hand side of its travel (on the left side seen from the reader in respect of the axle $p—p$), whilst the arm of the driving crank 7 becomes shorter as compared to the constant one of the driven crank 4, whereas on the higher part and at the right hand side of the travel, the rotation of the mass 1 is substantially being accelerated as, then the arm of the driving crank arm 7 becomes longer with respect to that of the driven crank 4. The other manners of variation that could be arrived at from other figures of the coordinates x, y, not excluded the case of $x=o$, $y=o$, can be easily deduced.

In the executive example of the Figs. 2 to 5, the eccentric rotating masses are two 10 and 10′, mounted turnably in opposite directions on a same rotation-pin 11—11′. This pin is fixed in the percussor 12, which in the rotation region of the mass is flatted, in order that the two parallel planes of rotation of the masses be the nearest possible between them. Such nearness is convenient to reduce to the minimum the torsional couple produced by the masses, which tends to make the percussor to rotate alternatively around the axle of percussion $p—p$.

Each of the two masses is provided with a crank pin 13, 13′ respectively, at equal distance from the axle 11—11′, whilst in the body 14 are turnably mounted around coaxial pins 15, 15′ two discs 16, 16′, each one bearing a radial groove 17, 17′ respectively: therein can engage and run respectively the pins 13, 13′. The discs 16, 16′ are provided on their circumference with a tooth collar and are thus driven by two tooth-wheels 18, 18′ respectively, which also are provided with conic toothing and are connected one with another by means of a conic tooth-pin 19. This pinion, or one of the two wheels 18, 18′, is connected with the driving shaft 20 having uniform rotation. Owing to the pinion 19, the two discs 16, 16′ have uniform but opposite rotations, so that the masses 10, 10′ are rotating, too, in the contrary directions. In this example the coordinates of the axle 15—15′ of the drive cranks are $x=a$ and $y=o$, being a orientated toward the back of the body.

By 21 is being indicated the tool on which the percussor strikes; the latter is longitudinally grooved and is being guided by a socket 22, which is internally provided with longitudinal grooves engaging into those of the percussor. This socket is also provided with longitudinal external grooves engaging into the corresponding internal grooves applied on the face 23 of the body.

The tool is provided with a collar 24 bearing a compressure spring 25, the other end of which is leaning against a collar 26 of the socket 22, which is axially and solidarily connected to the body 14 by means of the collar 27. In this way, a portion of the energy of the stroke is being transmitted to the body and pushes it forward in the direction of the penetration of the tool. The back end of the percussor has a hollow piston 28, which runs tightly in a cylinder 30 of the body 14 and bears on its head a valve 30, which is opening toward the cylinder-chamber. During the backward stroke of the percussor, the valve 30 is being closed, compressing the air in the cylinder 29, thus the power that the percussor possesses during its backward stroke is being stored and given back to the percussor during its forward stroke. Valve 30, opening again at the end of the forward stroke, serves to re-introduce into the cylinder box 29

the air eventually escaped due to imperfect packing of the piston. Into the piston **28** the air is introduced through openings **31**.

In order to balance the moment of torsion produced by the masses around the axle *p—p*, the driving discs **16**, **16'** are provided with eccentric masses **32**, **32'** situated in a position diametrically opposed to the eccentric masses **10**, **10'** in respect of the axle **15**, **15'** of rotation of the same discs. These masses **32**, **32'** have also the other task of a fly-wheel, as already said above.

The toothed pinion **19** can be located on the upper bottom of the clothing, coaxially to the axle *p—p*, and keyed directly upon a small drive situated between the two handles **33**, **33'**, instead of the central crossing **34** bar.

In the example of the Fig. 6 and 7, the two eccentric masses **40**, **40'** form a single block with their shaft of rotation **41**, but they both are rotating in the same direction. Their shaft **41** is rotating in a support **42** of the percussor **43**, which also in this case is preferably flatted at the utmost between the masses. The masses are, as in the former case, provided with crank pins **13**, **13'**, being in touch and running in radially arranged grooves **44**, **44'** of two discs **45**, **45'** being turnable on coaxial pinions **46**, **46'** which are mounted on the body **47**. These discs are provided with toothing on the circumference set in motion through toothed pinions **48** which are keyed on the same driving shaft **49**.

In the other parts this example is equal to the previous one, therefore the parts are identically numerated in the two cases.

Also in this case the driving discs are provided with eccentric masses **50**, **50'** which, besides the function of a fly-wheel already established, have the task of balancing the cross shifting that the two eccentric masses **40**, **40'** trend to produce through their rotation in the same direction.

If the eccentric masses on the percussor have no tendency to produce torsions and deviations, as for instance has been said in the case of Fig. 8, in which there are three masses **51**, **52**, **51'** in rotating motion in the same plane and being coupled among them by gearings **53**, **54**, **53'**, then the driving discs above described can be substituted by a simple crank **55** which has a slot **56**. Into the slot engages a pin **57** fixed on one of the eccentric masses, eventually by means of the crank **58**. In this case the crank **55** can be acted directly by the drive shaft **59**, without any use of gears, by rigidly joining to this shaft the pin of rotation **60** of the crank.

The same elimination of gears you can operate also in the case of the Fig. 6 and 7, in which the two masses are solidarily joined together and in fact only one of them could be set in motion. You will thus apply also in such case the simplified device, as shown by Fig. 9, adopting, however, for the drive crank the structure shown by the Fig. 10, in which this crank **61** is being provided with an eccentric mass **62** for the already said aim. For the symmetrical balancing of disturbances already described, it will be convenient that a crank such as **61—62** be provided also for the other of the two masses rotating on the percussor.

During the present description one has taken into consideration the case in which each driven crank is being provided with a pin and the corresponding driving one with a slot; but it is obvious, that you can also adopt the opposed structure, namely to provide with pin the driving cranks and with a slot the driven cranks. Further, instead of pins and slots, one can also adopt other moveable engaging systems between the cranks: this, obviously, has no bearing on the fundamentals of the invention.

It is at any rate obvious and expressly understood, that the illustrated and described examples cannot be construed as a limitation of the invention and that, therefore, also each variation concerning them, as well as each other realisation pertaining to the basical idea underlying the invention enunciated in first place, falls within the scope and under the protection of the present invention.

GIOSUÈ PINAZZA.

PUBLISHED

MAY 11, 1943.

BY A. P. C.

G. PINAZZA

ACTING DEVICE FOR CENTRIFUGAL FORCE PERCUSSION APPARATA

Filed Jan. 31, 1940

Serial No. 316,697

2 Sheets-Sheet 1

Fig. 2.

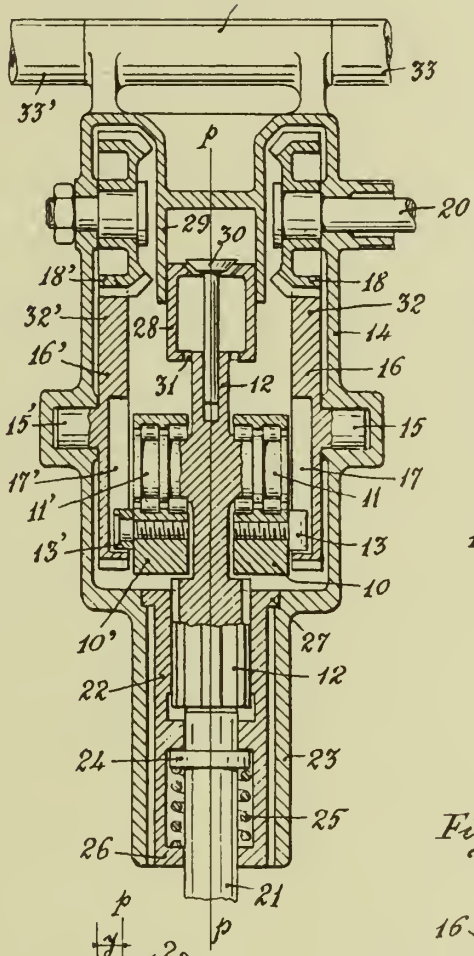

Fig. 3.

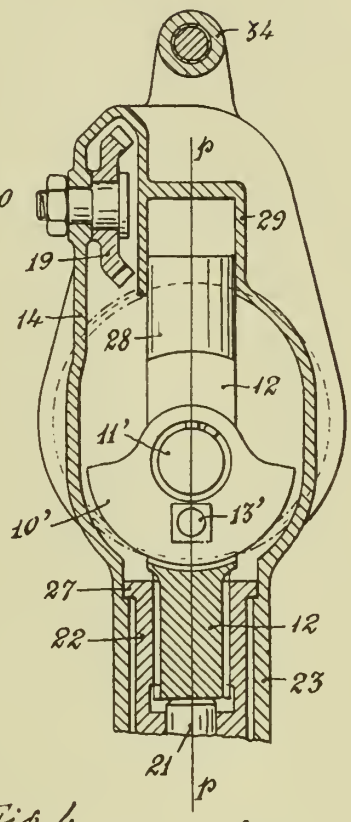

Fig. 4.

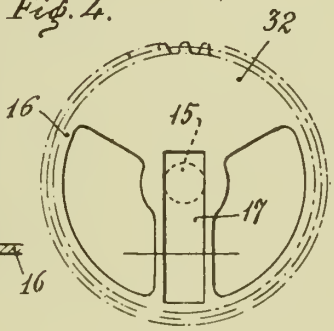

Fig. 5.

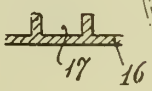

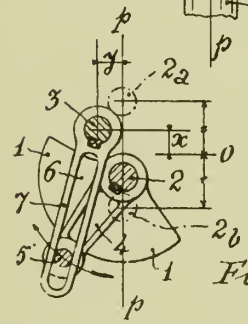

Fig. 1.

Inventor,
G. Pinazza

By: Glascock Downing & Seebold
Attys.

PUBLISHED

MAY 11, 1943.

BY A. P. C.

G. PINAZZA

ACTING DEVICE FOR CENTRIFUGAL FORCE PERCUSSION APPARATA

Filed Jan. 31, 1940

Serial No. 316,697

2 Sheets-Sheet 2

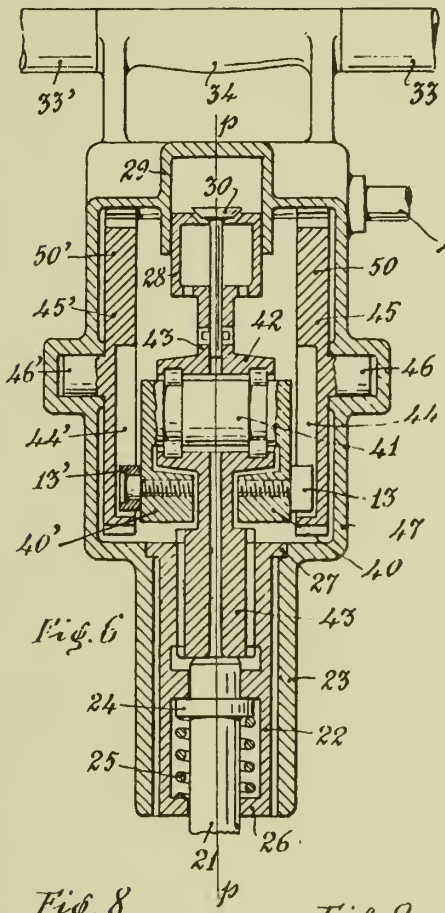

Fig. 6

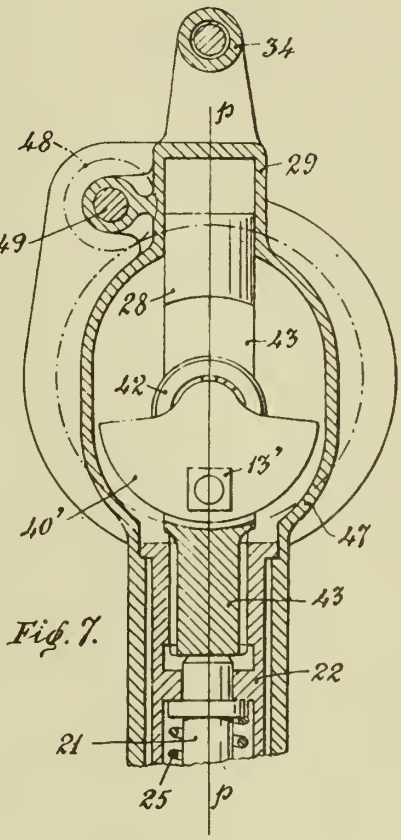

Fig. 7.

Fig. 8.

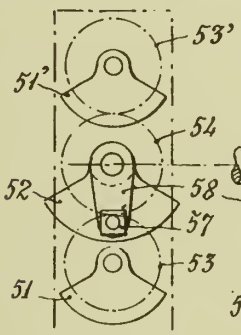

Fig. 9.

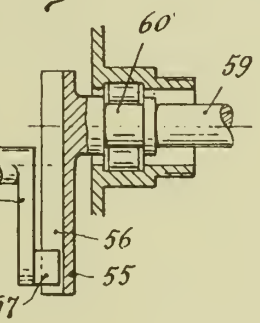

Fig. 10.

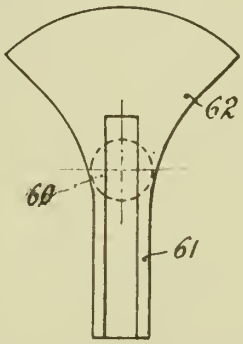

Inventor,

G. Pinazza

By: Glascock Downing & Seebold

Attys.

Published May 11, 1943

Serial No. 316,982

ALIEN PROPERTY CUSTODIAN

DRIVING MEANS FOR KINEMATOGRAPH FILM APPARATUS

Gustav Fries, Berlin-Charlottenburg, Germany; vested in the Alien Property Custodian

Application filed February 2, 1940

For actuating sound film apparatus it is requisite to obtain uniformity of speed of all devices that serve for reception and reproduction of the sounds. Recognition of this requirement led at an early stage in the history of the art to the development of suitable mechanisms in which the avoidance of irregularities of frequency by backlash of toothed gearing and other mechanical phenomena was effected in different ways. Also, in the combination of sound apparatus with kinematographic apparatus there is required synchronism of the picture and the sound, which presumes positiveness of the drive. In order to eliminate mechanical variations of frequency which would otherwise interfere with the correct reception and reproduction of sounds, there are used in known manner, for example, in disc apparatus, heavy discs acting as large fly-weights. On the other hand, with film apparatus there are used devices in which the damping of the variations of frequency is effected by governor tracks, elastic couplings, magnetic brakes, and the like. The use of devices which, by means of oil, cut out frequency variations in the cutting and in the copying of films, by the utilisation of the expansion or contraction of the film surface with curvature of the film, is also known.

Special provisions are to be made for effecting the uninterrupted feeding of films with apparatus in which the reception on the film band is effected mechanically by engraving the sound track by means of a stylus moved by speech-modulated currents, as in this case the forces opposing the effective turning moment are a multiple of those with apparatus with light or magnetic registration. The driving motor must therefore be more powerful, so that again the possibilities of irregularities of frequency are greater.

According to the invention, for the feeding of a film band for the purpose of reception and/or reproduction of sound according to any method the necessary forces for the turning moment are transmitted hydraulically. This has, first, the advantage that all mechanical irregularities which reach the sound controlling point when driving the motor by toothed gearing and sprocket gears are eliminated, as the operating liquid eliminates these in its flow. If necessary, simple additional provisions are provided in order to damp any very powerful disturbances of frequency. For example, the fluid conduits may be made elastic at certain points at which neutralisation of powerful disturbances is effected by expansion or contraction of the conduits.

It is known that in planing machine tools hydraulic transmissions are being used more and more in order to prevent chatter set up by toothed gearing.

As shown by experiments which aimed at adaptation of the methods used in planing machines to the sound film art, it is not directly possible to use merely on a smaller scale hydraulic devices employed in the machine tool industry, as the devices are too complicated for the reduced scale and the forces to be transmitted are relatively too large, so that mechanical disturbances are set up, rendering the apparatus useless. Further, the degree of exactitude of operation required with sound film apparatus is substantially greater than in connection with machine tools; also the special requirements of operation must be taken into account.

Broadly regarded, the invention consists in the incorporation in the drive to kinematograph film apparatus, particularly sound film apparatus, of a hydraulic transmitter including a rotary motor or turbine which drives the apparatus and which is driven by a rotary pump.

As hereinafter described, the operating liquid circulates in a closed circuit. Preferably the pump is a positive pump of the gear-wheel type; the motor is suitably of the sliding vane type.

In Figs. 1 to 8 of the accompanying drawings there is illustrated an hydraulic device applicable for actuating talking picture kinematograph apparatus.

Fig. 1 is a section through the fluid motor.

Fig. 2 a section of Fig. 1 on the line II—II of Fig. 1.

Fig. 3 is a view of the mouth of one of the conduits.

Fig. 4 shows the assembly.

Fig. 5*a* shows schematically the motor illustrated in Figs. 6 to 8, with working chambers arranged in series.

Fig. 5*b* shows a similar arrangement with the working chambers arranged in parallel;

Fig. 5*c* shows a connection of the working chambers such that the rotors turn in opposite directions.

Fig. 6 shows a motor with two working chambers, one half being in section on the line 40—41 of Fig. 7 and the other half being shown in plan.

Fig. 7 is a section on the line VII—VII of Fig. 6.

Fig. 8 comprises a front elevation and a side elevation of a piston.

As shown in Figs. 1 and 2, the motor consists of the casing 5 in which rotates the rotor 6 having three radial vanes 14 spaced 180° apart and

slidable in pockets in the rotor 6 and urged towards the wall of the casing 5 by springs 15. The cover 7 with the casing 5 encloses the rotor 6, being maintained by screws 10 and holding members 11 against the casing 5. A stuffing box 26 prevents escape of the operating liquid at the point where the shaft 8 penetrates the cover 7. The shaft 8 carries the rotor 6.

The operation is effected in this wise: For example, a gear wheel pump 18 driven by way of the shaft 27 (Fig. 4) sucks the operating liquid from the container 16 by way of the conduit 17 and discharges it by way of the elastic tubular connection 23. The liquid then passes through the pipe 9 to the motor 20, and after compelling the vanes 14, flows back to the container by way of the return connections 24, 22. The container 16 has a filling opening adapted to be closed by the plug 28. This has the advantage that, if the closure is effected after filling all the parts with operating liquid, a vacuum is set up above the liquid level at 29 in the container 16 with any loss of liquid in consequence of defective sealing, such vacuum counteracting any tendency to further loss of liquid. This point is of importance for portable apparatus. It is also important, however, to maintain the liquid chambers tightly closed in order to prevent ingress of the smallest foreign bodies which due to the smallness of the mechanical parts might readily interfere with the operation.

The formation of the motor shown in Figs. 1 and 2 is symmetrical with regard to the inlet and outlet connections 9 and 24, so that the motor can be used, depending on the direction of the flow of the liquid, for backward or forward running. A similar structure may also be used as a pump instead of the gear wheel pump 18. The rotor 6 (Fig. 2) is sealed relatively to the casing 5 by the sealing segment 25 into the two sides of which the pipes 9 and 24 debouch. The mouths of these pipes are so formed by milling as shown at 53 that the fluid meets with no resistance which prevents it from flowing away, because, as experiments have shown, the smallest space in which the liquid can be dammed up leads to instant blocking of the vanes 14 and thus brings the rotor 6 with the shaft 8 to rest. For this reason each milled recess 53 extends to a point beneath the rotor 6 and into the casing 5 (Fig. 3). The motor shown in Figs. 1 and 2 is designed for a very small output; for example, it is possible to use the power of a normal gramophone mechanism as a driving means for the pump 18, (Fig. 4) whereby to drive the hydraulic motor 20.

If larger outputs and consequently increased fluid pressure are to be taken care of, then the construction of the motor adopted is that illustrated in Figs. 6 to 8, which is so constructed as to realise symmetry; that is, the casing is built with two covers 30 and 31 constructed to be exchangeable with one another. The compartment between the covers is determined by the height of the intermediate ring 32 which is centred by the guiding spigots 33. Within said compartment are fitted the two rotors 34 and 35 which are also alike in construction. The rotor 34 is connected with the shaft 8 by the pin 37, while the rotor 35 is driven from the rotor 34 by the ring 36. By halving the height of the ring 32, it is possible to have only one rotor, for example, the rotor 34 within the casing, so as to employ a single motor as shown in Figs. 1 and 2. Further, if the pressure plate 39 is removed and a second stuffing box is provided at 38, the shaft 8 may be constructed to project from the casing at both ends. In order that the friction of the vanes 14 on the casing wall 32 may be reduced, the rotors 34 and 35 are provided with external rings 42 and 43 which rotate with the rotors. Further, the vane guides 44 are formed so as to extend to these external rings 42, 43, in the rotor bodies, whereby jamming of the vanes in their movement over the segments 45, 46 is prevented. For the purpose of obtaining good sealing of the vanes 14 with the rings 42, 43, the contact faces 47 (Fig. 8) are ground to the same radius; the corners are highly rounded at 49 (Fig. 6) to secure good running on the segments 45, 46. In order to prevent the operating liquid from being dammed up, there are provided recesses 48 through which residue of liquid can flow off when the vanes reach the point 50; further, the mouths of the passages 51 are extended somewhat beyond the contracting space at 50 so that also the liquid can flow off laterally.

As the number of operative rotations of the motor for sound appliances for direct actuation of discs, film tracks or toothed drums is between 78 and 360 revolutions per minute, the motor with a rotor having three vanes runs uniformly within this range of number of revolutions. Balancing of the liquid which may be present beneath the vanes 14 in the guides 44 is effected by the annular groove 52. If a large number of rotations is aimed at, then two rotors 34, 35 each with three vanes may be employed. In this connection the two segments 45, 46 are relatively displaced through 180° and the vanes 14 of the two rotors 34, 35 are 60° apart. This arrangement has the advantage that symmetry of the moving parts is afforded, thus avoiding necessity for special weighting of these parts.

The forms illustrated in Figs. 5*a*, 5*b*, and 5*c* employing two rotors in one casing show how by suitable connections for the operating liquid the device can be adapted to meet different practical requirements.

To sum up, the hydraulic actuation of sound film appliances gives with simple means the possibility of quiet running without mechanical irregularities of frequency.

The pump 18 of Fig. 4 may be driven in any suitable manner. For example, in sound film devices which are used in automobiles equipped with wireless the drive may be taken from the engine. As in sound film apparatus the number of revolutions and the direction of rotation are fixed for most cases, it is unnecessary to provide regulating and reversing devices; these may be fitted in the form of throttle valves or change-over cocks in known manner. For larger outputs there is suitably fitted in addition a safety valve 21, (Fig. 4) in order to permit the liquid to run back in case of interruption of the motor 20.

GUSTAV FRIES.

PUBLISHED

MAY 11, 1943.

BY A. P. C.

G. FRIES

DRIVING MEANS FOR KINEMATOGRAPH FILM APPARATUS

Filed Feb. 2, 1940

Serial No. 316,982

2 Sheets-Sheet 1

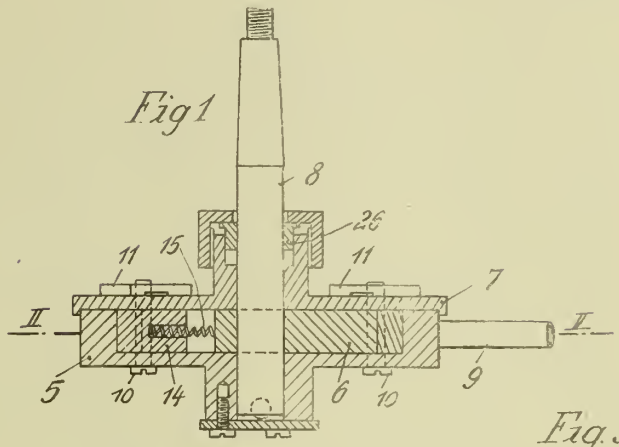

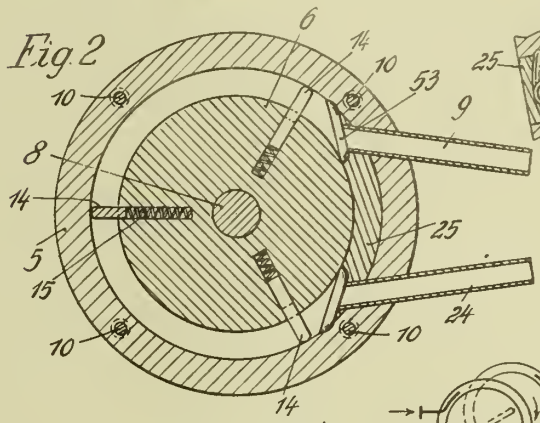

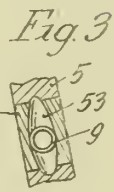

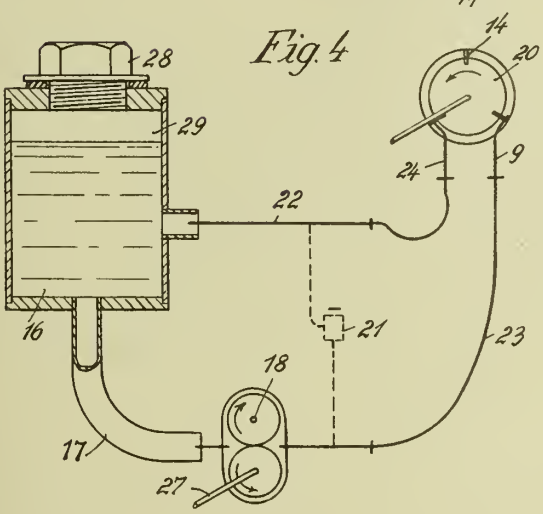

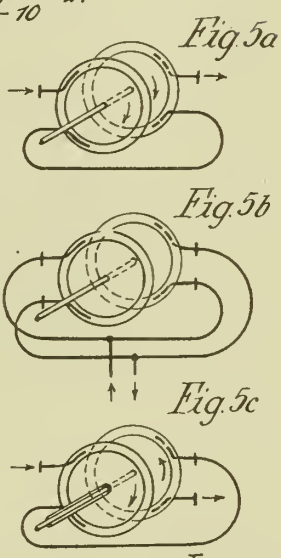

Inventor:
GUSTAV FRIES
BY C. P. Goepel.
ATTORNEY

PUBLISHED

MAY 11, 1943.

BY A. P. C.

G. FRIES
DRIVING MEANS FOR KINEMATOGRAPH
FILM APPARATUS
Filed Feb. 2, 1940

Serial No.
316,982

2 Sheets-Sheet 2

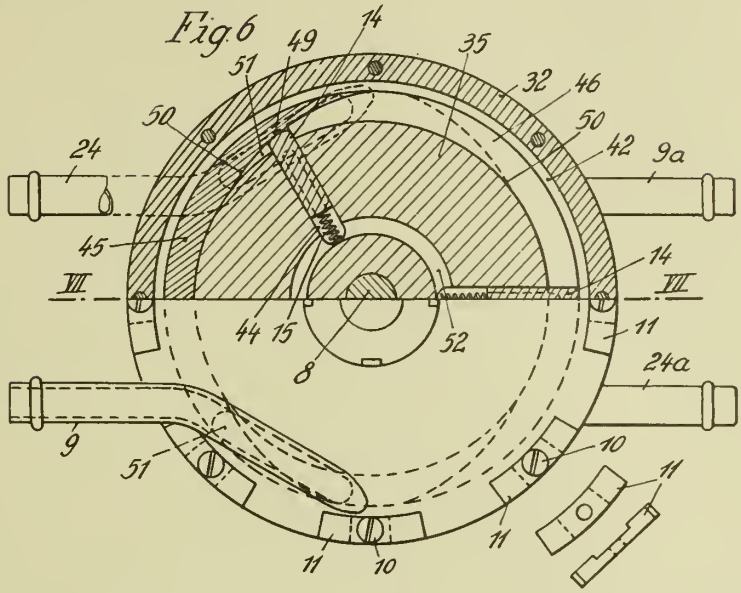

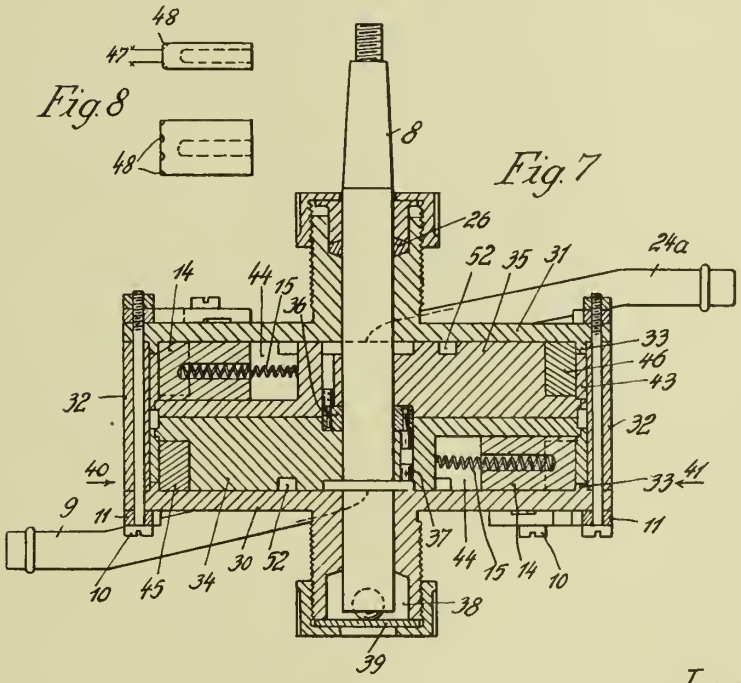

Inventor:
GUSTAV FRIES
BY C. P. Goepel.
ATTORNEY

Published May 11, 1943

Serial No. 318,782

ALIEN PROPERTY CUSTODIAN

PLIABLE ENVELOPE OR BALLOON BAG FOR INFLAMMABLE GASES

René Leboime, Paris, France; vested in the Alien Property Custodian

Application filed February 13, 1940

The pliable bags for containing combustible gases, such as those utilised in the balloons must possess a certain number of qualities, the most important of which are: lightness, suppleness, resistance, stability and incombustibility.

The envelope or balloon bag which forms the object of the present invention, fulfils these conditions to the highest degree on account of the combination of the following:

The suppleness and lightness are obtained through the use of vegetal, animal or synthetic fibres, woven into a fabric or material, which is made incombustible through every process necessary to this effect.

The resistance is obtained through the use of numerous fibres of mineral origin, either interwoven with the above mentioned fibres or constituting in themselves an independent fabric or material, which is to be added and joined to that made of the animal, vegetal or synthetic fibres, rendered non-flammable. As for the impermeability, this will be obtained by adding to the above mentioned fabric or material either sheets of indiarubber, or a rubbered texture, or a coating of one or both of the above mentioned fabrics or materials, treated with synthetic indiarubber.

It must be understood that indiarubber made non-flammable by every appropriate treatment is to be preferred.

As a non-limitating example of the invention, such a bag can be made of a fabric of non-flammable vegetal or synthetic fibres and containing asbestos fibres or asbestos material which will be coated with incombustible synthetic indiarubber.

The invention is not limited to the above given example; it can be applied to any kind of incombustible fabric or material, made of animal, vegetal or synthetic fibres and to any kind of fibres of mineral origin, other than asbestos, such as mineral wool, wired rolled glass, etc.

RENÉ LEBOIME.

PUBLISHED

MAY 11, 1943.

R. LEBOIME

PLIABLE ENVELOPE OR BALOON BAG FOR INFLAMMABLE GASES

Filed Feb. 13, 1940

Serial No.

318,782

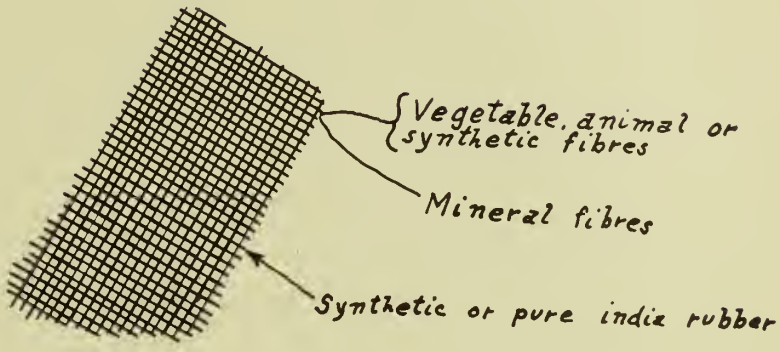

Inventor:

René Leboime

By

Young, Emery & Thompson

Attorneys

Published May 11, 1943

Serial No. 318,940

ALIEN PROPERTY CUSTODIAN

AUTOMATIC PUMP FOR FUEL INJECTION ACTUATED BY THE COMPRESSION OF GAS IN THE CYLINDER OF AN INTERNAL COMBUSTION ENGINE

Oleg Archaouloff, Paris, France; vested in the Alien Property Custodian

Application filed February 14, 1940

The present invention relates to pneumatic pumps for injection, and chiefly to the pumps specified in U. S. Patent application No. 1,435,787, filed on November 14, 1922, in the name of Vadime Archaouloff.

It is a known fact that this very simple construction will readily afford very high pressures of fuel injection, which is a most important condition for a perfect combustion.

After long and serious researches and practical tests, and as a result of numerous intsallations in normal operation upon large marine engines of different types, at well-known German and Swedish docks, the direct injection known by the name of Archaouloff is recognized as one of the best.

However, it must be admitted that this system, in its present state, is not well adapted for engines of moderate power and high speed.

The difficulties are due to the small size of the pneumatic piston, which prevent its proper automatic lubrication, this being the essential feature for its regular working and its fluid-tight conditions.

The invention has for its object to overcome such drawbacks, while eliminating all lubrication and all friction of the pneumatic piston, this being replaced by an elastic device consisting of a set of independent units, each comprising a pair of flat metal discs of small thickness, which are inserted into a central ring.

The accompanying drawings show by way of example which is indicative but not limitative, a constructional form of a new pump for fuel injection provided with the elastic piston, the object of the present application, in order to set forth the remarkable consequences resulting from the entire elimination of the friction of the pneumatic piston.

Fig. 1 is a vertical section of the pneumatic pump according to the invention.

Fig. 2 is a section on the line A—B of fig. 1.

Figs. 3, 4 and 5 are sections on the line C—D of fig. 1, showing the three positions of the upper end of the pump plunger.

The principal part of the injection pump, the subject-matter of the present invention, is the elastic piston which is shown in section in fig. 1.

In this figure, 1, 1, are flat metal discs which are inserted in pairs into a central ring 2, thus forming separate units which can be readily removed from the elastic piston. These units are separated from one another by T-shaped rings 6, which are in loose contact with the outer edges of the discs 1. The conduit which makes constant connection between the pneumatic cylinder 3 and the combustion chamber of the engine cylinder is shown at 7. The disc forming the outer surface of the piston is shown at 4, and the axial rod 5 of the piston, whose end traverses the end of the cylinder, bears against the head 12 of the feeding plunger 8 of the injection pump properly so called. The gas delivered from the compression chamber of the engine cylinder exerts a constantly-increasing pressure upon the elastic piston, and this latter, by its rod 5, imparts the thrust to the plunger of the injection pump, thus compressing the charge of fuel until the time of the injection, at which the disc units, which are compressed, drive this fuel with great force through the injector into the combustion chamber of the engine cylinder. The maximum deflection of each unit of the piston, when compressed, should not exceed a certain limit, depending upon the distance between the rings 6.

The exact fluid-tight conditions for the said elastic piston are obtained exclusively by the proper insertion and the careful fitting of the discs 1, and also by the external pressure of the gas.

It is evident that the present construction for pneumatic piston is well adapted for engines of any power, and will in all cases provide for a remarkably simple construction and operation of the injection pump, as will be further described.

The Archaouloff process for direct fuel injection comprises two pumps in all cases, one operating at very high pressure and the other at a lower pressure and adapted for a proportional feed of fuel to the first pump, as specified in U. S. patents dated November 15th, 1922 nº 1,435,787, and June 21st, 1927, nº 1,633,158.

However, the individual pumps for the proportional feeding of the fuel to each engine may be entirely eliminated, together with their regulating mechanism, in connection with the load on the engine, owing to the complete absence of friction of the disc type of pneumatic piston.

The function of the proportional feeding of the fuel, in this new construction, is fulfilled by the plunger 8.

The said plunger is provided at its upper end with two oppositely-situated beveled parts 9 and 9′ (figs. 1, 3, 4 and 5). The feeding plunger 8 is driven, in its forward stroke, and during the injection of the fuel, by a strong thrust of the elastic piston due to the action of the gas compressed in the combustion chamber of the engine cylinder, and in its return stroke, by a moderate pressure exerted by the fuel upon its end.

When the inclined edge 10 of the bevel 9, during the injection, covers the orifice 11 leading to the injector, the plunger 8 will instantly stop, and the injection ceases.

From the preceding considerations, it will be understood that this stopping of the plunger will depend upon its angular position relatively to the orifice 11.

Figs. 3, 4 and 5 show by way of example three consecutive angular positions of the bevel 9.

In fig. 3, the distance between the edge 10 of the bevel 9 and the orifice 11, in the vertical direction, is a maximum, as well as the stroke of the plunger 8 and the charge of injected fuel.

In fig. 4, this distance has a medium value, as well as the stroke of the plunger and the charge of fuel.

In fig. 5, this distance is a minimum, as well as the stroke of the plunger and the charge of fuel.

In order to bring the plunger into any angular position corresponding to the desired charge of fuel to be injected, fig. 1 shows a mechanism consisting of a pin 13 passing through the head of the plunger 8, its ends being slidable in vertical grooves 14 and 15 provided in a ring 16. This latter can be actuated by hand by means of a small lever 17, or by a centrifugal governor of small power, in order to bring the said plunger, and hence its bevels 9 and 9', into the desired angle with reference to the orifice, thus causing the injection of a quantity of fuel corresponding to load on the engine.

It will be noted that owing to the double bevel, there will be no lateral pressure upon the end of the plunger, and that all wear and friction of the said plunger are entirely eliminated.

Accordingly, a very slight pressure of the fuel delivered by the pipe 18 of a fuel tank mounted at a suitable height, will be sufficient to return the said plunger to its initial position.

In this manner, all individual fuel pumps will be superfluous.

OLEG ARCHAOULOFF.

PUBLISHED

MAY 11, 1943.

BY A. P. C.

O. ARCHAOULOFF

AUTOMATIC PUMP FOR FUEL INJECTION ACTUATED BY THE COMPRESSION OF GAS IN THE CYLINDER OF AN INTERNAL COMBUSTION ENGINE

Filed Feb. 14, 1940

Serial No. 318,940

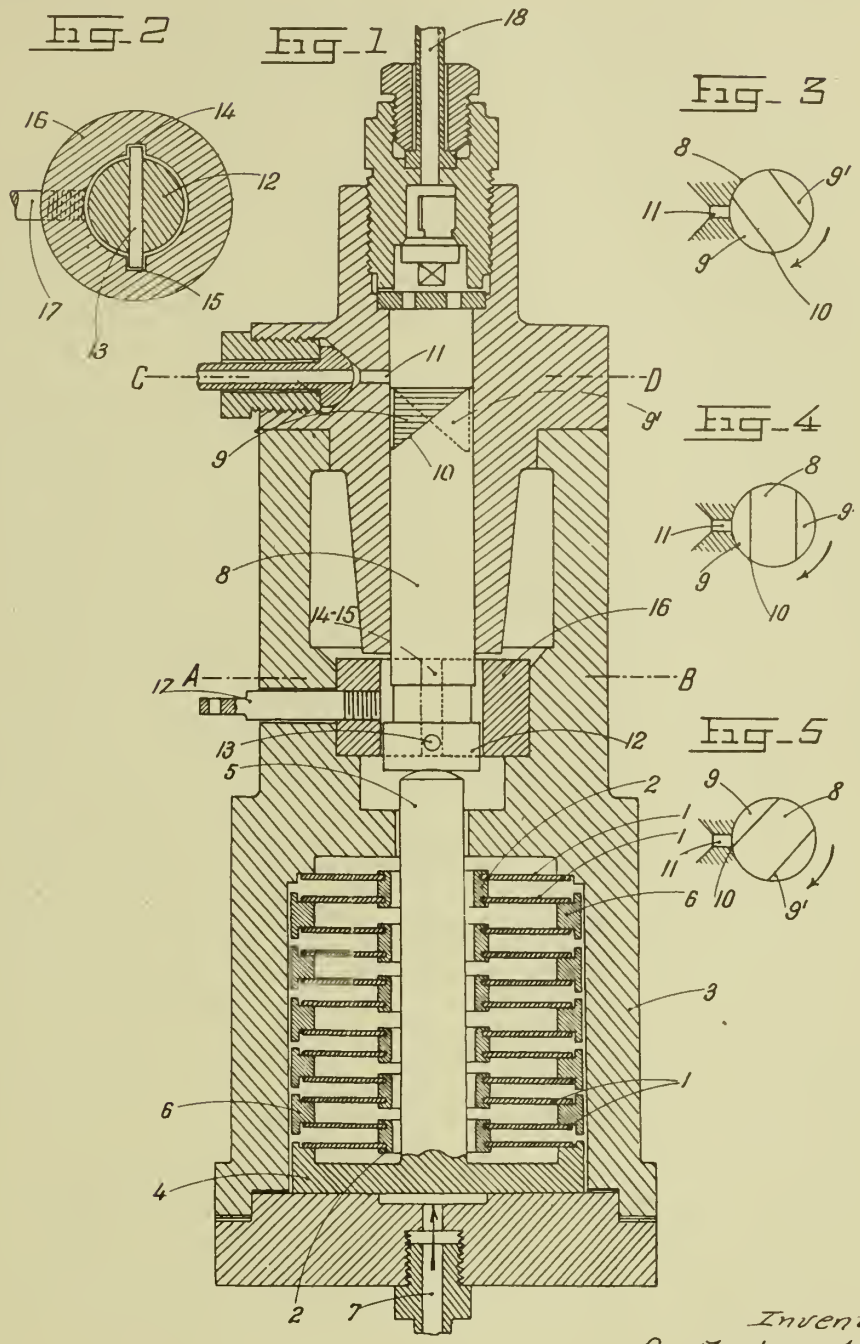

Inventor,
O. Archaouloff

By: Glascock Downing & Seebold
Attys.

Published May 11, 1943 Serial No. 320,074

ALIEN PROPERTY CUSTODIAN

APPARATUS FOR THE PICK-UP AND RECORDING OF THE CARDIAC FUNCTION, OR OF SLOW PROCESSES OF MOTION IN OTHER ORGANS OF THE HUMAN OR ANIMAL BODY, POSSIBLY IN LIFELESS BODIES

Laszlo Rósa, Budapest VIII, and Imre Zakariás, Budapest VII, Hungary; vested in the Alien Property Custodian

Application filed February 21, 1940

So called electro-cardiographs for the pick-up and recording of the cardiac function are already known, in which the electric voltage impulses induced by the work of the muscles of the heart are transferred on the luminous screen of a cathode ray tube or on an electro-mechanical device e. g. on a galvanometer, and in which the variation as a function of time of the voltages is traced on a film band kept in uniform motion. In view of the fact that in electrocardiography the peak values of the differences of potential between the electrodes do not amount to more than to about 2–3 millivolts, an amplifying apparatus comprising a number of stages is required in order to enable these voltage impulses to operate the recording device which possesses a relatively low degree of sensitivity. In the equipments of known types the necessary supply of heating and anode current is supplied by batteries forming part of the equipment. A drawback of this arrangement is that owing to the rapid diminution of voltages possible in the case of these batteries the amplification is, immediately after putting the apparatus in circuit, exposed to fluctuations, by which recording is rendered unreliable, the voltage condition of the batteries themselves being in general unknown to the attendants. Experiments have shown that it is possible to avoid the fluctuations of amplification if the voltages required for feeding the amplifier tubes are derived from the electric mains system (if necessary from a motor-car storage battery) and if for stabilizing the anode and grid direct voltages of at least the first (input) amplifier tube at least two mutually consecutive filtering stages having high time constant are employed, at least one filtering stage consisting of a voltage-stabilizing tube or tubes, whilst the remaining filtering stages either consist of a voltage stabilizing tube or tubes likewise, or of a voltage-stabilizing transformer, a motor-generator having a sufficient degree of inertia, or a circuit arrangement comprising electronic tubes, e. g. a reflex circuit arrangement of stabilizer tubes.

The diagram of connections of an embodiment shown by way of example of the apparatus according to the invention is represented on the accompanying drawing.

On the drawing, 1 denotes the first (input) amplifier tube, without the device for heating the cathode, whilst 14 denotes the second and 15 the third amplifier tube. As, in the case of apparatus for examining the cardiac function, it is essential that the fluctuation of the feeding voltages, expressed for the control grid of the first amplifier tube, should be smaller than 0.03 millivolt, a tube having a high degree of amplification, corresponding to D <3% preferably a screen grid tube is employed in the first amplifier stage. The voltage to be amplified which is admitted to the apparatus through the terminals J—J is impressed through the condenser 3 on the control grid 2 of this tube. The bias voltage of the control grid 2 is supplied by the battery 5 by means of the resistance 4. The feeding voltage for the anode 9 and for the screen grid 8 of the amplifier tube 1 is stabilized in the first stage by the series resistance 13 and by the four-stage stabilizer tube 10, whilst the second stage of stabilization is attended to by the stabilizer tubes 6 and by the series resistance 12. The current consumption of the stabilizer tube 10 in the first filtering stage is higher (amounting to about 30–50 milliampères) than the current consumption of the stabilizer tubes 6 and 7 of the second filtering stage (amounting to about 5–10 milliampères), which circumstance preferably also finds expression in the dimensions of the tubes in question. The stabilizer tubes 6 and 7 employed in the second filtering stage may possibly be dispensed with, and in the remaining filtering stages it is possible to employ voltage stabilizing transformers, circuit arrangements comprising electronic tubes e. g. reflex circuit arrangements of stabilizer tubes or motor generators possessing an adequate amount of mechanical inertia, the feeding of the last-named apparatus being effected by means of the alternating or direct current mains system or possibly by means of a motor car storage battery of 6 to 12 volts.

The working point of the screen grid tube 1 in the first amplifier stage should according to the invention preferably be adjusted in such a manner that relatively to the anode the fluctuations of the anode and of the screen grid direct voltages should exactly mutually balance. This desired adjustment will be reached if

$$\Delta Eg_2 \frac{\partial ia}{\partial eg_1} R_a - \Delta E_a = 0$$

in which formula ΔEg_2 is the fluctuation of the screen grid direct voltage, ΔE_a the fluctuation of the anode feeding voltage.

$$\frac{\partial ia}{\partial eg_2}$$

is the degree of steepness of the anode current expressed as a function of the screen grid voltage and R_a the working resistance in the anode cir-

cuit, which latter is marked 11 on the drawing. In order to enable the compensation described above of the voltage fluctuations to be achieved, the anode resistance 11 is constructed as an adjustable resistance. The calculation shows that in the case of the usual high-frequency pentodes the working resistance has to be adjusted between 50,000 and 100,000 ohms, in order to achieve compensation.

In the second amplifier stage the screen grid tube 14, and, respectively, in the third amplifier stage the triode 15 are working with voltages stabilized in one stage only, the said stabilization being taken care of by the stabilizer tube 10 and by the series resistance 13. The anode resistance 16 of the screen grid tube 14 is adjustable likewise, in the same way as the anode resistance 14 in the first amplifier stage in order to enable the working point of the amplifier tube 14 to be adjusted in such a manner as to ensure that the fluctuations of the feeding voltages of the anode and of the screen grid, respectively, should just exactly mutually balance. The control grid 19 of the amplifier tube 14 receives the bias voltage from the battery 18 by means of the resistance 17. The feeding voltages for the anode 21 and for the screen grid 20 of the amplifier tube 14 are stabilized by means of the stabilizer tube 10 and the series resistance 13. The control grid 29 of the triode 15 receives the bias voltage from the battery 31 by means of the resistance 30, whilst the control voltage itself is admitted to the control grid 29 through the condenser 32. The anode 33 works on the resistance 34, whilst the amplified voltage is admitted to the recording device at the terminals O—O by means of the condenser 35.

The condensers 22, 23, 24, 27 and 28 as well as the resistance 25 and the switch 26 are employed for influencing the width of, i. e. for altering, the band of frequencies passed by the amplifier. It is possible to assure by these means that the amplifier should pass those frequencies only, which are essential, e. g., in the recording of the cardiac function, the frequencies of the heart sound: 20 to 400 Hertz, and the frequencies of the electro-cardiogram: 0.5 to 40 Hertz. The adjustment of the desired band of frequencies is preferably effected by means of a number of members (C—R) composed of condensers and resistances.

Experiments have shown that at least by way of first amplifier tube and of stabilizer tubes it is necessary to employ tubes of such a kind the essential electrodes of which are constructed as low in microphony as possible and/or to fix these tubes in a resilient manner. The anode and grid bias voltages of the amplifier tubes in the second and further amplifier stages should be stabilized at least in one stage by means of low-frequency filtering with the aid of stabilizer tubes, it being possible to employ, partly or entirely, the same stabilizer tube or tubes for the stabilizing of the feeding voltages of the various amplifier stages. The control grid bias voltage of the amplifier tubes can be produced by means of the voltage drop in one cathode resistance, or supplied from a stabilized voltage; the bias voltage of the first amplifier tube and possibly also those of further amplifier tubes should preferably be taken from a battery, possibly by means a voltage divider of high resistance.

For the calibration of the amplifier it is possible to derive alternating voltage, preferably by means of a resistive voltage divider, from the heating voltage of the amplifier tubes, it being possible to impress the said calibrating voltage on the control grid of the first amplifier tube.

If in the apparatus, recording is effected by means of a cathode ray tube, it is preferable to employ a cathode ray tube of such a type the fluorescent screen of which emits blue light for the purposes of taking photographs, and green, yellow or white light for the purposes of direct observation, or in which a secondary luminous surface is employed. As the inertia of the human eye amounts to about one-eighth of one second, the time constant of the luminous substance emitting the green, yellow or white light should be greater than one-third of one second. The voltage to be graphically recorded is impressed to one of the pairs of deflecting plates of the cathode ray tube, whilst in the case of direct observation a saw-tooth voltage is impressed on the other pair of deflecting plates, the frequency of which saw-tooth voltage can be synchronized with that of the heart-beat. As the period of one heart-beat may vary between about 0.2 and 2 seconds, the saw-tooth voltage generator should be constructed in such a manner as to enable the period of oscillation to be adjusted at least between 0.5 and 2 seconds. The capacity of the condenser, periodically charged and discharged for producing the saw-tooth voltage should be assumed at a value higher than 2 micro-farads.

LASZLO RÓSA.
IMRE ZAKARIÁS.

PUBLISHED

MAY 11, 1943.

BY A. P. C.

L. ROSA ET AL.

APPARATUS FOR THE PICK-UP AND RECORDING OF THE CARDIAC FUNCTION, OR OF SLOW PROCESSES OF MOTION IN OTHER ORGANS OF THE HUMAN OR ANIMAL BODY, POSSIBLY IN LIFELESS BODIES

Filed Feb. 21, 1940

Serial No. 320,074

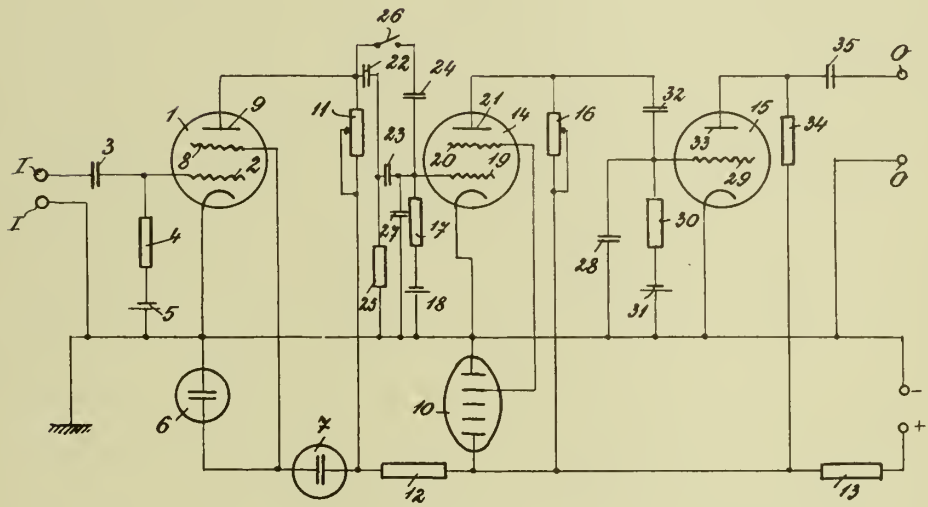

INVENTORS:
Laszlo Rosa
Imre Zakarias

BY Michael S. Striker
AGENT.

Published May 11, 1943 Serial No. 320,200

ALIEN PROPERTY CUSTODIAN

CORRUGATED FIBRO-CEMENT SLABS

Giovanni Guerci, Turin, Italy; vested in the Alien Property Custodian

Application filed February 21, 1940

Corrugated plates or slabs of fibro-cement or similar materials, such as are known under the registered names of Eternit, Salonit, and artificial slates, are obtained by arranging the sheet of fibro-cement or the like in a plastic condition, i. e. when it has not yet set, on a corrugated plate constituting the mould or former and forcing material into the grooves thereof by the pressure of members circular in section, generally rods.

This method is unsuitable both from the standpoint of efficiency and quality of the product. The process is obviously a lengthy one and drawing to which the still incoherent material of the sheet is submitted to cause it to flow into the grooves in the mould and fit therein weakens the slab and is often the cause of visible defects that affect its commercial value.

Moreover, the mould is constituted by a corrugated sheet metal which is practically of the standard corrugated type, so that corrugations of the fibro-cement boards are of the normal profile throughout.

However metal sheets are thin and elastic, so that the top profile does not largely differ from the bottom profile and the sheets perfectly fit on each other when they are superposed, for instance at their ends for making a roof covering.

Corrugated fibro-cement slabs are of a considerable thickness (3 to 8 mm), so that the radii of curvature of the corrugations on both faces considerably differ from each other. The result is that the superposed portions of the slabs do not match each other, as the projections on one slab rest in the corresponding grooves in the other slab along two generatrices only. Elasticity of fibro-cement being very low, the profiles are not elastically deformed; hence, besides giving a very bad joint, abnormal stresses arise in the overlapping ends of the slabs, that may be the cause of breakage when the plates are overcharged.

It is an object of this invention to eliminate all the above mentioned drawbacks, by providing a machine having a shaped mould, so as to obtain plates with perfectly matching ends and in which the corrugations in the freshly cast sheet are successively formed without generating drawing stresses in the sheet.

According to this invention the corrugated slabs are formed by means of a mould, of which the profile is not the same at both ends, but one end of which is accurately conjugated with the other end. The variation in profile may be a gradual one from one mould end to the other, or one of the profiles may extend only over the portion to be superposed to the end of the adjacent plate.

On forming the fibro-cement slab, the material is placed on an endless band which gradually discharges it into the mould and, as it is deposited thereon, a roller or a roller set, that automatically follow the corrugations, fit the sheet into the corrugations without drawing it in the least.

The accompanying drawing shows by way of example a manner of carrying out this invention.

Figure 1 is a cross sectional view of superposed corrugated slabs of the known type;

Figure 2 is a view similar to Figure 1 of corrugated slabs according to this invention;

Figure 3 is a plan view of a slab according to this invention;

Figures 4 and 5 are views similar to Figure 3 showing two modifications.

Figure 6 is a perspective view of a machine for manufacturing corrugated slabs according to this invention and

Figure 7 is a detail view showing a modification of the machine.

Referring to Figures 1 to 5, 1 and 2 denote two corrugated fibro-cement slabs of the known type. The top profile of the corrugations is determined by the radii of curvature R_1 and R_2 merging into each other and the lower profile by the radii of curvature r_1 r_2, which are larger and smaller, respectively, than R_1 and R_2 by the slab thickness e. These profiles are the same throughout the slab length, so that on superposing the two plates 1 and 2 their corrugated portions do not perfectly engage each other, but merely contact on their flanks, theoretically, along two generatrices p, leaving spaces 3 between the apexes of the adjacent corrugations of the two slabs.

According to this invention (Figures 2 and 3), the ends 4 of a corrugated slab 5 is of any standard profile, for instance the same as that of slabs 1 and 2 shown in Figure 1, that is a profile determined by the radii R_1 and R_2 at the outside and radii r_1 and r_2 at the inside; the other end 6 has an outer profile determined by the radii r'_1 and r'_2 (that is, a profile which espouses the inner profile of the other end), while its inner profile is determined by the radii r and r that are respectively as follows: $r=r'_1-e$; $r^o=r-e$. Change of profile from the end 4 to the end 6 may be a gradual one, as shown in Figure 3, or the standard profile 7 (Fig. 4) may extend over almost all the length of the plate and the conjugated profile may extend over a small length 8 at one end of the plate, or, finally (Fig. 5), the conjugated profile may extend over almost all

the length 9 of the slab and the standard profile may be limited to an end 10.

The mould, which is of one of the above described profiles, is slidably mounted on the machine shown in Fig. 6; in said figure, 11 denotes the frame of the machine comprising the longitudinal members 12, on which moves a carriage 13 carrying the mould 14 of corrugated sheet metal.

An endless band 15 travels over the mould 14 and the freshly formed fibro-asbestos roll unrolling thereon is fed by the endless band beneath a knife 17 which cuts it into sections 18 of the desired length.

Each section 18 is discharged by the endless band 15 on to the mould 14 which is fed beneath the endless band.

The corrugations in the mould 14 mesh after the manner of a rack with the bars 19 of a squirrel's cage, of which the pivots 20 are engaged by vertical grooves in supports 22 secured to the frame 11.

With this arrangement, as the mould 14 moves beyond the conveyer 15, it receives the fibro-cement section 18, and the bars 19 meshing with the corrugations as the latter are covered by the sheet apply said sheet against the walls of the corrugations, without drawing the material.

According to the modification shown in Fig. 7, the squirrel's cage 19 is replaced simply by a roller 23, loosely mounted at the end of rocking arms 24. The roller 23 follows the profile of the mould and applies against the corrugations the plastic fibro-cement material is described above.

GIOVANNI GUERCI.

PUBLISHED

MAY 11, 1943.

BY A. P. C

G. GUERCI

CORRUGATED FIBRO-CEMENT SLABS

Filed Feb. 21, 1940

Serial No.
320,200

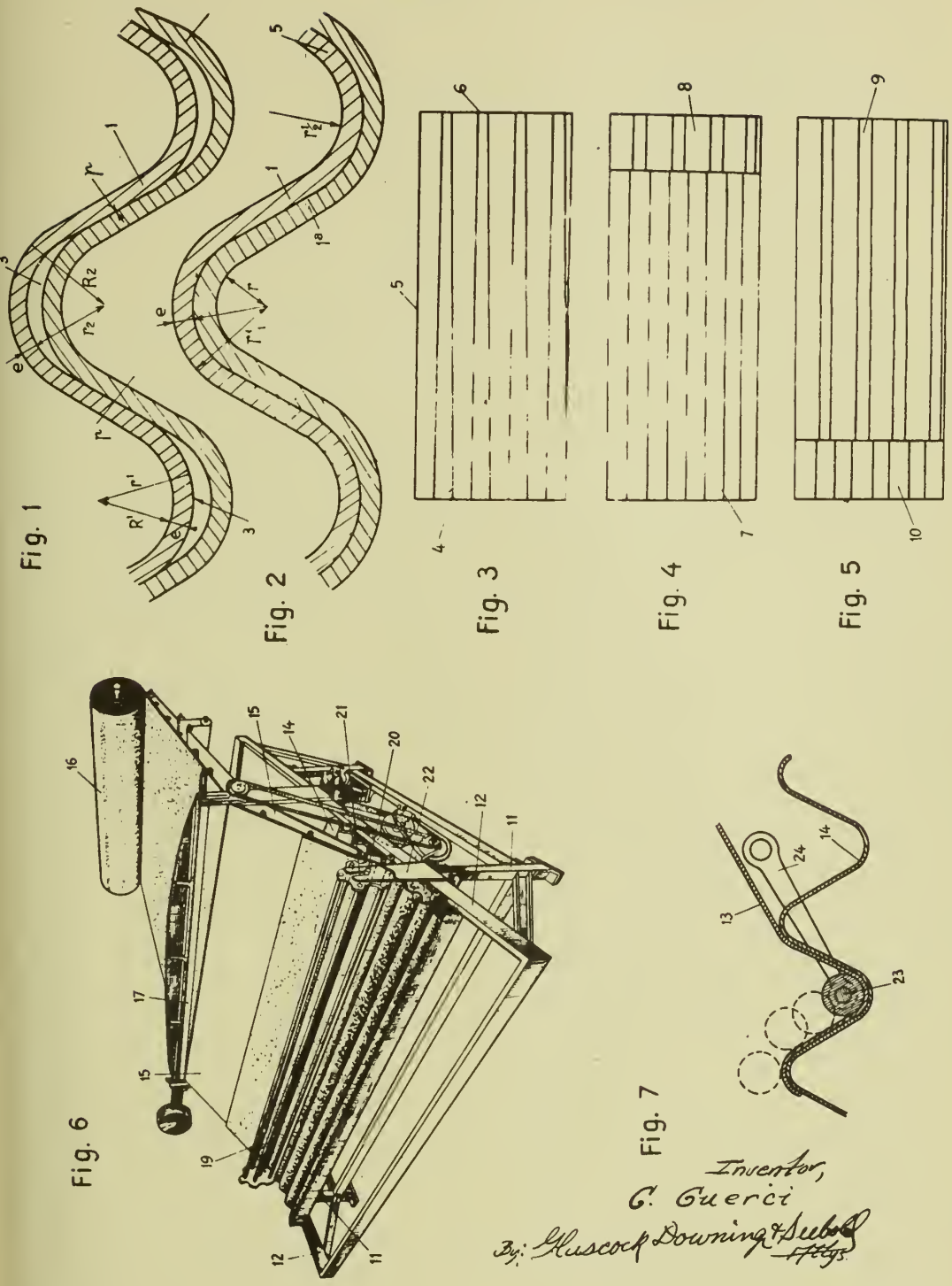

Inventor,
G. Guerci
By: Muscoop Downing & Sebald
Attys.

Published May 11, 1943

Serial No. 320,946

ALIEN PROPERTY CUSTODIAN

HEATING APPARATUS FOR THE HEATING OF ROOMS

Guido Wünsch, Berlin, Germany; vested in the Alien Property Custodian

Application filed February 26, 1940

This invention relates to improvements in or relating to heating apparatuses for the heating of rooms of the kind comprising a gas heated glow radiant the radiation beam of which is directed forwardly into the room to be heated. The well known heating apparatuses of this type are provided with a water tank for the purpose of reducing the loss of heat of the waste or combustion gases. However, the use of such water tanks is connected with a serious disadvantage in that the vapor contained in the gas condenses on the outside of the cold tank wall thereby causing corrosion of that wall.

The present invention aims at removing this serious disadvantage without foregoing the utilization of the heat of the waste or combustion gases.

A further object of the invention is to provide means for exclusively directing the entire effective heat into said water tank and into said radiation beam so as to avoid any overheating of that part of the room in which the heating apparatus is situated.

Another object of this invention is to provide a wooden furniture casing mounted in front of the radiator and the water tank for enclosing both.

Other aims, objects and advantages will be dealt with in the following description in connection with the accompanying drawings wherein

Fig. 1 represents a view of a heating plant comprising a gas heating stove in accordance with the invention,

Fig. 2 is a vertical cross sectional view of the gas heated radiator, the water tank and the casing enclosing both,

Fig. 3 is the same view as that shown in Fig. 2 representing however the casing removed from the radiator and the tank,

Fig. 4 is a vertical cross sectional view of the radiator and the tank showing these parts on a greater scale,

Fig. 5 is a plan view of the radiator and the tank, and

Figs. 6 and 7 are horizontal cross sectional views along the lines VI—VI and VII—VII, respectively, of Fig. 5.

Referring now to the drawings, the heating plant shown in Fig. 1 comprises a gas heated radiant stove and a plurality of heating elements, one of which is shown in Fig. 1, said elements communicating via water pipes 1 and 2 with the water tank 3 (see Fig. 2). In front of said water tank 3 there is provided a radiator 4 heated by a gas burner 5, the waste or combustion gases from said burner passing through a waste gas hood 6 and a channel 7 into the chimney 8. The radiator consists of any convenient ceramic material and possesses in front projections 9 (see Fig. 4) for increasing the surface of the radiator body relative to the volume. In this way the ceramic body more quickly reaches the glowing stage. The water tank extends upwardly above the radiator, the upper part being provided at the front wall with ribs, flanges, fins 10 or the like through which the waste or combustion gases pass before entering into the chimney so that the heat transfer from said gases to the water will be materially improved.

The waste gas hood 6 surrounds the upper part of the water tank and the fins 10 in spaced relation leaving a passage 11 between the front wall of the waste gas hood and the fins so as to receive the flow of the combustion gases into the channel 7 even if the flow cross section between the fins is insufficient for the amount of combustion gases to be discharged. In this connection it is to be noted that the flow cross section between said fins is liable to be reduced for instance by deposits from the combustion gases.

As may be seen from Fig. 5, the two water pipes or conduits 1 and 2 are connected to the water tank in such a manner that the return flow of water from the heating element E enters the lower part of the tank heated exclusively or substantially by the rearward radiation from the radiator 4 whilst the other conduit 1 leading the heated water to said elements E communicates with the upper part of the tank provided with said fins. In order to prevent loss of heat, the water tank has a U-shaped cross section as shown in Figs. 6 and 7, the radiator being embraced by the lateral tank parts 3*a*, 3*b* so that the lateral radiation from the radiator 4 is likewise received by the tank. In this respect it is important that in accordance with the invention means are provided for receiving and directing that part of the radiation from the radiator 4 which is not received by the tank. In the embodiment shown a frame-like refracting screen or funnel 12 is arranged so as to surround the front surface of the radiator thereby preventing radiation in lateral direction between the tank 3 and the screen 12. I prefer to provide a screen having an inside refracting surface so that rays of heat incident on the inner refracting screen wall are refracted and thereby directed into the room to be heated. Furthermore the screen is in this way prevented from being overheated. I

desire to point out that the invention in the first place aims at protecting against overheating in the vicinity of the stove. For this reason it may be possible to use a screen which has not an inner refracting surface but consists of any suitable insulating material protecting against an overheating of the vicinity of the stove.

From the foregoing description it follows that, in distinction from the previous gas heated stoves of the type in question, the immediate vicinity of the tank and screen remains at the comparatively low temperature of 212° F so that it is not necessary to provide an incombustible casing **13** for enclosing the radiator and the tank. Accordingly a casing may be used which may of course be given the appearance of a piece of furniture. In this way the casing may be chosen to match the furniture or other equipment of the room to be heated.

With a view to easy access to the radiator, tank and burner, the casing **13** of the illustrated embodiment of my invention may be removable. I prefer to arrange the screen of the casing so that it may be removed together with the casing as illustrated in Fig. 3.

As hereinbefore explained, the arrangement according to my invention is a material advance over the previous gas heated stoves.

On the one hand my invention ensures a more complete distribution of heat by directing the heat only into the forward radiation beam and into the water; therefore my invention not only ensures more economic heating but also constitutes a hygienic improvement, as experience has taught, any overheating of the stove jacket causes unpleasant odors and irritation of the respiratory organs. Moreover the means for preventing any overheating of the stove jacket have a further important advantage due to the fact that the relatively low temperature permits the use of wood or any other combustible material for the stove jacket or casing. A wooden casing, for instance, may easily be executed in a form matching or harmonizing with any furniture or fittings.

On the other hand it is an essential improvement that the lower tank part will be heated exclusively or at least substantially by the rearward radiation from the radiator **4** and not by the combustion gases. In this way the combustion gases come into contact merely with the upper part containing the water of higher temperature (already preheated in the lower part by the radiation) where the combustion gases cannot deposit water by condensation. As is well known, such deposits comprise constituents causing a corrosion of the tank wall. In this respect I prefer, as pointed out above, to connect a water conduit **2** carrying the water to the tank to the lower part thereof, thereby obtaining the desired preheating of the water by radiation.

While I have described and illustrated my invention by a special embodiment shown in the drawing, it will be readily understood by those skilled in the art that the description is not to be taken in a limiting sense, many modifications of the embodiment as shown being possible within the scope of my invention. Moreover it is not indispensible that all the features of my invention be used conjointly since they may be employed advantageously in various combinations and sub-combinations.

GUIDO WÜNSCH.

PUBLISHED G. WÜNSCH Serial No.

MAY 11, 1943. HEATING APPARATUS FOR THE HEATING OF ROOMS 320,946

BY A. P. C. Filed Feb. 26, 1940 2 Sheets-Sheet 1

Fig. 1

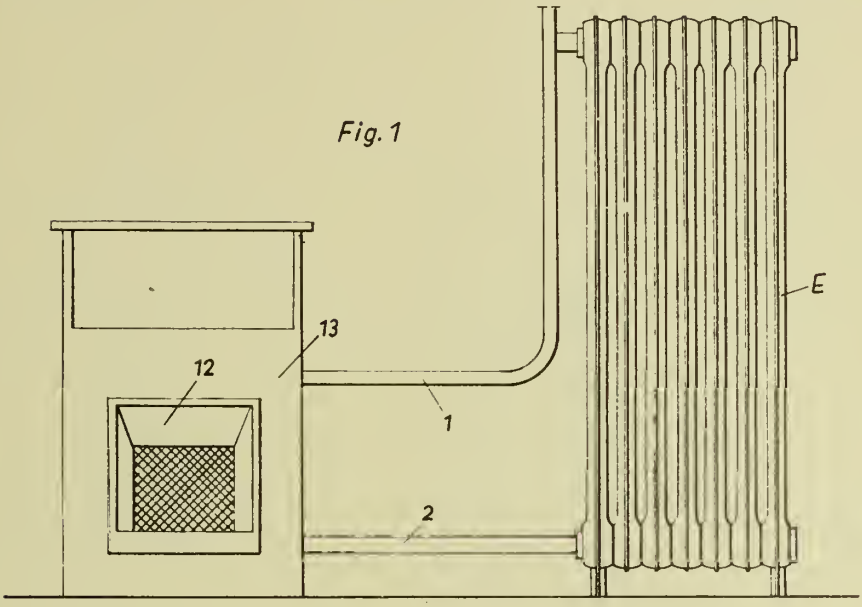

Fig. 2

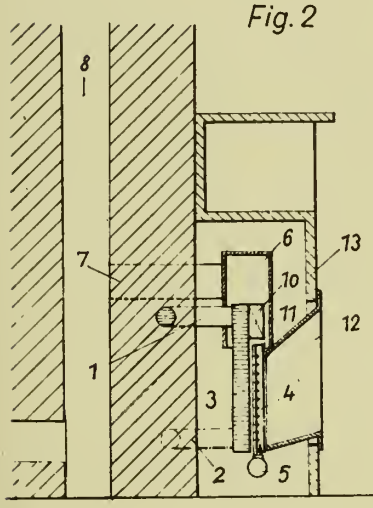

Fig. 3

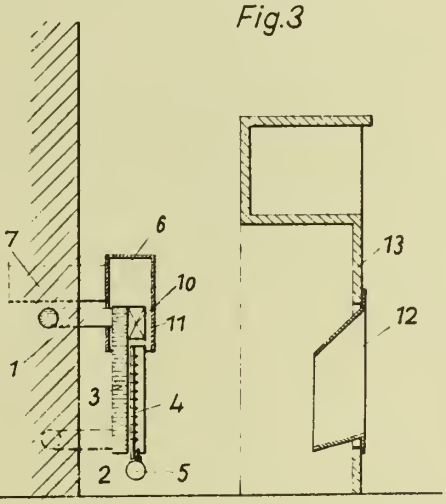

Patan 1831

Guido Wünsch

By A. P. Adams

Attorney

PUBLISHED MAY 11, 1943. BY A. P. C.

G. WÜNSCH

HEATING APPARATUS FOR THE HEATING OF ROOMS

Filed Feb. 26, 1940

Serial No. 320,946

2 Sheets-Sheet 2

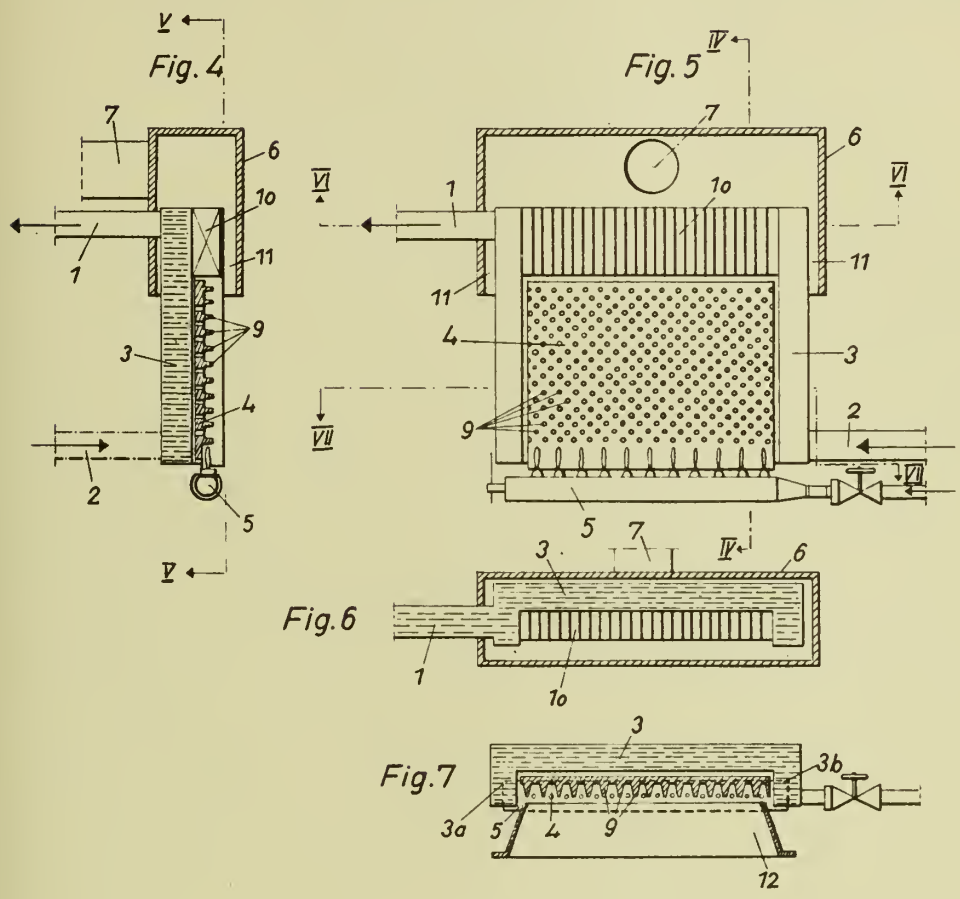

Patan 1831

Guido Wünsch

By A. D. Adams

Attorney

Published May 11, 1943

Serial No. 321,912

ALIEN PROPERTY CUSTODIAN

HORMONE PREPARATIONS AND METHOD FOR PRODUCING THE SAME

Lajos Paunz and György Sasvári, Budapest, Hungary; vested in the Alien Property Custodian

No Drawing. Application filed March 2, 1940

This invention relates to hormone preparations, viz. to hormone preparations of such a kind the hormoneactive component whereof consists of so-called proteinaceous hormones. Such hormones are, e. g. insulin, the hormones of the pituitary gland, etc. Especially, the invention is aiming at insulin preparations. The purpose of the invention is to provide hormone preparations of such a kind as can be introduced in to the human organism in an effective manner enterally (i. e. by way of the intestinal canal).

It is well known that hormone-active substances having the character of proteins will, if introduced into the organism enterally, exert quite insignificant effects only or no effects at all on the organism. According to the view prevailing at present this fact is due to the circumstance that these hormones are decomposed by the proteolytic enzymes of the intestine, as e. g. by tripsin, before it would be possible for the hormone to be absorbed by the organism.

It should be remarked that the expression "hormone-active substance" should be interpreted in the widest sense. It is understood to cover natural hormones (products of endocrine glands) or synthetic products having similar effects, as well as hormone-containing organs and organ preparations, or extracts of hormone-containing organs.

We have found that it is possible to obtain hormone preparations capable of being introduced effectively enterally, by adding to substances containing hormone-active substances of protein character, by way of accompanying substances, compounds belonging to a group of compounds comprising the classes enumerated below.

One of the classes of compounds referred to above comprises heterocyclic nitrogen bases of the monocyclic and polycyclic types not possessing the character of dyestuffs, built up of rings of five and/or six members with one or more atoms of nitrogen in the ring, as well as the compounds which can be derived from these nitrogen bases, as e. g. products of lateral chain substitution of these bases, e. g. alkaloids capable of being derived from these bases. Preferably there are employed such nitrogen bases of the kind referred to above as are of more or less aromatic character, and/or compounds capable of being derived from such nitrogen bases. The nitrogen bases mentioned can be employed as such or in the form of their salts.

The second class of compounds referred to above comprises phenolic substances, i. e. compounds of aromatic character, possessing at least one free hydroxyl group, and/or substances from which under the conditions of their employment such compounds are split off.

As compounds belonging to the first class there should be mentioned in the first place, as highly advantageous accompanying substances enabling enterally introduced hormones to be effectively absorbed, the compounds presenting the structural skeleton of the cinchona alkaloids (which accordingly may be considered derivatives of quinoline). The substances presenting the structural skeleton of cinchona alkaloids are, generally comprising natural or synthetical cinchona alkaloids, their derivatives such as substitution products, isomeric conversion products, oxidation products, reduction products, or compounds formed by them with other substances, e. g. with organic or anorganic acids and the like. By way of examples of such compounds which have been found to be well suitable for employment as accompanying substances we mention quinine, quinidine, cinchonin, cinchonidin, optochin, vuzin, eucupin, quininone. These bases are preferably employed in the form of their water-soluble salts formed with anorganic acids, e. g. with hydrochloric acid. These compounds are distinguished not only by their eminent efficacy, but also by the fact that of all these compounds relatively high doses can be introduced permanently into the human system without any harmful effects being exercised by them.

The efficacy of the substances enumerated above can be shown very clearly by tests made with insulin preparations on rabbits, in course of which the blood sugar level of the rabbits is observed.

Thus, there was obtained in a group of rabbits kept on a hunger diet (the group being composed of 36 rabbits kept under the precautionary measures usual in the case of insulin calibration), after the rectal introduction of a mixture of 20 I. U. of insulin and 0,05 grams of quinine hydrochloride in 1,0 cubic centimetre of water, a blood sugar drop amounting on the average to 55%.

If 20 I. U. of insulin, in one cubic centimetre of water, was injected rectally to the same animals without the accompanying substance, it was only in about 25 per cent. of the total number of experimental animals that it has been possible to detect an insignificant amount, not exceeding 10%, of blood sugar drop, whereas in the case of the other animals the blood sugar content was either not altered at all or even increased 10 by to 30 per cent.

It has been possible to obtain similar results by

employing, instead of quinine hydrochloride, 0.05 grams of cinchonin hydrochloride, 0.05 grams of quinidine hydrochloride, 0.05 grams of optochin (ethyl-hydro-cuprein) hydrochloride, 0.05 grams of vuzin (iso-octyl-di-hydro-cuprein) hydrochloride, and in each case 20 I. U. of insulin, obtaining hereby an average of blood sugar drop of 48 per cent, with the first-named, of 40 per cent. with the second and of 45 per cent. with the third and fourth substance.

By means of control experiments it has been ascertained that, when introduced rectally neither the quantity of cinchona alkaloids indicated above alone, nor insulin, introduced rectally together with the quantity of hydrochloric acid required, for the formation of the alkaloid salts in the examples given above, produces any substantial alteration of the blood sugar content.

The figures of blood sugar content given above have been determined by means of the colorimetric method of Folin-Wu, in the form as modified by Kowarski.

Among the other heterocyclic nitrogen bases belonging to the first class mentioned above, and/or among their salts, we would by way of example mention pyridine and its derivatives, quinoline, iso-quinoline and its derivatives, e. g. papaverin which may be derived from iso-quinoline, and pyrazolon derivatives, e. g. di-methyl-phenyl-pyrazolon. These compounds also show a well-defined effect of the character referred to above in connection with proteinaceous hormones in case of being introduced together with them enterally, particularly rectally, into the organism.

Among the compounds belonging to the second class mentioned above, it is possible to employ monohydric phenols, as e. g. tricresol, as well as polyhydric phenols, as e. g. resorcinol. The phenols may be partly etherified, as for instance guaiacol, and may also be substituted in the lateral chain, as e. g. methyl resorcinol; it seems, however, that phenols having a long lateral chain (containing more than five carbon atoms) are presenting a slightly weaker effect, and are therefore less suitable for the purposes of the invention. In the course of tests, carried out in a manner similar to those enumerated above in connection with cinchona alkaloids, it was possible to obtain, by means of a preparation containing 20 I. U. of insulin, and 0.05 grams of resorcinol in 1.0 cubic centimetre of aqueous solution, an average blood sugar drop of 50 per cent. Among the phenols, resorcinol possesses the advantage that it may be employed in the case of the human organism in relatively large doses, up to about 0.5 grams, without any harmful secondary effects resulting.

Among the substances which in their admixture to hormones according to the invention render effective enteral introduction of proteinaceous hormones possible, it is preferable to select such substances as will not exercise any harmful secondary effect during a long—in the case of diabetic patients often almost permanent—treatment. This is of importance, because in order to obtain the desired effect, relatively large quantities of the compounds which according to the invention are added as accompanying substances to the hormone-containing substances have to be added to one dose of the hormone, i. e. to such a quantity of the hormone as is usually introduced into the organism at one occasion.

The method of adding various substances, among them also phenols or their derivatives, as preserving means to hormone preparations intended for administration by means of injection has already been known. These substances were in general added to the hormones in such quantities that the quantities of preserving preparations added to each dose of the hormone were of the order of magnitude of milligrams. In the case of the enteral introduction of the preparations such quantities do not show any effect. Distinctly differing therefrom, we employ according to our invention, in hormone preparations intended for enteral administration, such quantities of the accompanying substances (understanding thereby the total quantity of accompanying substances added) which amount for one dose of hormone to one centigram or more, in many cases to five centigrams or more, and in most cases to one decigram or more, and in general are of the order of magnitude of several centigrams or decigrams up to about one gram, and in some cases even more.

Now from this point of view it is of considerable importance that we have found that a large number of the accompanying substances present an increased efficacy in case they are employed in mutual mixtures. It is possible to mutually mix either compounds belonging to the same class or compounds belonging to different classes, as e. g. quinine hydrochloride and resorcinol. It was found that a certain synergism exists between these accompanying substances, i. e. that in case of the employment of mixtures relatively smaller quantities of the individual products may be able to exert the same effect. This may be described with reference to the following example. In order to obtain the same effects as obtained on rabbits with a certain quantity of insulin and 0.025 grams of quinine hydrochloride or 0.05 grams of resorcinol, it is not necessary, in case of the employment of a mixture of quinine hydrochloride and resorcinol, to employ—as might be expected—0.0125 grams of quinine hydrochloride and 0.025 grams of resorcinol, but only 0.01 grams of quinine hydrochloride and 0.02 grams of resorcinol. By utilising this increased effect of some mixtures of accompanying substances, it is possible to employ also such substances, of which, in order to obtain the desired effects, it would, in case these substances were employed alone, be necessary to employ such quantities as would already show undesirable secondary effects. Moreover, the permanent rectal employment of hormone preparations in the case of highly sensitive patients, is facilitated by the alternating employment of preparations prepared with different accompanying substances. In the case of existing idiosyncrasies, likewise, an opportunity is offered of employing such a mixture as may be convenient for the particular individual concerned.

As mentioned above, the effective enteral administration not only of insulin, but also of other hormones of proteinaceous character is rendered possible by the employment of the accompanying substances according to the invention. It is well known that extracts of the posterior lobe of the pituitary gland have the effect of reducing the excretion of water by the kidneys. This can, however, only be observed in case the extracts are administered by means of injection. By employing resorcinol as an accompanying substance, it was possible to observe the inhibition of the excretion of urine also in case of the rectal introduction of extracts of the posterior lobe of the pituitary gland in the case of rabbits on which previously an artificially increased diuresis had been produced by intrastomachal adminis-

tration of water. In connection herewith it has not been necessary to employ the purified preparations obtainable in commerce, it having been sufficient to triturate the posterior lobe of the pituitary gland of a calf with a small quantity of physiological sodium chloride solution, mix it with 0.1 grams of resorcinol and introduce the mixture into the rectum of rabbits.

It should be remarked here that for the preparation of products of the pituitary gland it is preferable not to employ cinchona alkaloids by way of accompanying substance, because the preparations of the pituitary gland are in any case very substantially stimulating the peristaltics of the intestine, which effect is intensified in such extent by the addition of cinchona alkaloids that in case of rectal administration it is hardly possible to prevent a premature emptying of the intestine.

It should be remarked that the invention is not dependent on any theory, and is not limited to any theory, either as to the question whether compounds may possibly become formed between the hormones and the accompanying substances or not, nor as regards the mechanism of the effect of the accompanying substances.

When preparing the hormne preparations according to the invention in such a form in which they are introduced into the human system, it is possible to proceed according to different methods. The method of procedure will depend on the one hand on the kind of starting materials employed, i. e. on whether liquid or solid substances are available and on the other hand on the nature of the preparations to be produced. For the introduction of hormone preparations through the alimentary canal it is, substantially, the following methods of administration that are available. The preparations can be administered, for instance, by mixing the dry constituent substances or by precipitating the solutions of the constituent substances on suitable carrier substances, in the shape of tablets or lozenges covered with a coating, e. g. of hardened gelatine, which will become dissolved in the intestine only. The most advantageous method of producing the preparations is, however, to produce them in such a shape as will enable them to be administered rectally. In this case it is also possible to start either from solutions, preferably from aqueous solutions of the constituent substances and possibly add to them agents increasing viscosity, as e. g. gelatine, or incorporate the said constituent substances in dry mixture or in solution into suitable fundamental materials as e. g. into oils or fats, e. g. into gelatine or cacao butter and thus produce paste-like preparations or solid suppositories.

The production of the hormone preparations according to the invention in a shape suitable for rectal introduction has shown itself highly advantageous for various reasons. It appeared that the efficacy of the preparations is all the higher, the higher the concentration of the active substances introduced, and any dilution by intestinal contents can be prevented most easily in the rectum which can be well emptied spontaneously or provokedly, and which can, following that, by a small addition of opium to the preparation (e. g. 0,01 to 0,04 g extractum opii for one dose) be quieted for about 12 hours or more. By these means it is possible to produce a so-called "deposit of medicine" in the rectum, which deposit is absorbed gradually.

Another advantage of the production of preparations for rectal introduction consist in that in this case it is not necessary to employ expensive hormone-containing substances purified in a complicated manner. Accordingly, it is possible, for instance, to employ products of the preliminary stages of the processes of purification and/or extraction, as for instance raw insulin. This circumstance is all the more advantageous, as in the case of the hormone preparations according to the invention a greater number of hormone units are required for assuring a certain effect than would be required for obtaining the same effect by the injection of the hormones. In the case of the tests on animals, this quantity of hormone was about 10–15 times as high as the quantity of hormone by means of which the same effect could be obtained by subcutaneous injection of the hormone. In the case of humans about 6–8 times of the quantity are in most cases sufficient with rectal introduction. This quantity is of course ineffective in the case of rectal administration without the accompanying substances according to the invention. As, however, it is not necessary to employ expensive purified hormone preparations, this circumstance will partly or entirely balance the increase of cost caused by the necessity of employing greater quantities of hormones. Even if by the employment of greater doses of hormones an increase of the cost of the preparations should nevertheless arise, the fact of dispensing with injection, which is inconvenient and frequently means sources of danger, particularly for diabetic patients, represents an advantage which must be valued very highly.

In the production of the hormone preparations according to the invention it will be preferable, when employing heterocyclic nitrogen bases by way of accompanying substances, to employ the water-soluble salts of these bases. Notably, some of these bases are insoluble in water, and can accordingly not be employed if the preparations are to be produced from solutions. On the other hand, many of these compounds are powerful bases which are able to exert a decomposing effect on proteinaceous hormones. The H-ion concentration of the system introduced into the intestine is—if necessary by the addition of a small quantity of acid—preferably adjusted to a pH value between about 4 and 5. In the case of such a hydrogen ion concentration the proteinaceous hormones employed are frequently situated in their iso-electric territory i. e. possibly in precipitated condition, which fact however does not represent any drawback for absorbability. On the contrary, the employment of more strongly acidified systems has in most cases not shown itself to be favourable, whereas more alkalinized systems appear to be objectionable as regards the durability of the preparations.

In the case of highly sensitive patients it is possible to admix to the preparations, moreover, small quantities of anasethetics, e. g. 0,01 to 0,02 grams of novocain (hydrochlorine of the p-amino-benzoic acid ester of N-diaethyl-amino-ethyl alcohol).

If the hormone preparations are produced in the form of viscous solutions or pastes, these can preferably be introduced into a container fitted with a conduit suitable for introduction into the rectum, the said container consisting of a resilient substance, e. g. rubber. The preparation can be emptied into the rectum by simple pressure exerted on the container. The quantity of preparation introduced into the container should

preferably be such as contains a quantity of hormone sufficient for a single administration.

In what follows we shall indicate a few examples for the production of enteral insulin preparations for employment on humans, adding that the invention is of course not limited to these examples.

(1) 20 to 100 I. U. of insulin are worked up (in dry condition or in solution) with 0.25 grams of quinine hydrochlorine, 0.25 gram of quinidine hydrochloride, 0.03 gram of Extr. Opii and 2.0 to 3.0 grams of cacao butter so as to form suppositories (rectal inserts).

(2) 20 to 100 I. U. of insulin, 0.5 gram of quinine hydrochloride, 0.03 gram of Extr. Opii are thoroughly mixed in 25 cubic centimetres of a 5 per cent gelatine solution. After having been heated to a temperature of 37° C the preparation can be introduced into the rectum by means of a syringe or of a bulb.

(3) 20 to 100 I. U. of insulin, 0.5 gram of resorcinol and 25 cubic centimetres of a 1 per cent. starch solution are mixed with each other. The solution obtained can be administered rectally as indicated in Example 2.

(4) 20 to 100 I. U. of insulin, 1.0 gram of dimethyl-phenyl-pyrazolon, 0.03 grams of papaverin hydrochloride, 0.02 grams of novacain and 2.0 to 3.0 grams of cacao butter are worked-up into a suppository.

(5) 20 to 100 I. U. of insulin, 0.5 gram of resorcinol, 0.02 gram of Extractum Opii, 0.02 gram of novocain and 2.0 to 3.0 grams of cacao butter are worked-up into a suppository.

(6) 20 to 100 I. U. of insulin, 0.15 gram of quinine hydrochloride, 0.25 grams of resorcinol, 0.03 grams of Extr. Opii and 2.0 to 3.0 grams of cacao butter are mixed with each other so as to form a suppository.

It has already been proposed to add to preparations of the posterior lobe of the pituitary gland intended for being administered by injection, quinine compounds for the purpose of stabilizing the preparations i. e. for preventing decomposition during storage. In connection herewith an increase of the effect of the preparations has also been observed, which fact may undoubtedly be ascribed to the circumstance that quinine compounds possess a physiological effect similar to that of the pituitary gland preparation in question (viz. the production of contractions of the uterus and of the intestine). Certainly this proposal did not contain any indications whatever regarding the behaviour of quinine compounds in the case of the introduction through the alimentary canal of the hormone concerned or of other hormones. Apart herefrom we do not, as already mentioned, intend—for the reasons referred to—to employ rectally the hormones of the posterior lobe of the pituitary gland in connection with quinine compounds.

Experiments have also been published regarding the employment of hexylresorcinol with insulin in the case of dogs, the insulin together with the hexylresorcinol having been introduced directly into the stomach of the dogs in the course of these experiments. From these experiments, likewise, it has not been possible to foresee the possibility of effectively administering hormones with phenolic substances through the intestinal canal, as it is expressedly stated in the publication referred to that the hexylresorcinol does not protect the insulin against destruction by trypsin (which is present in the intestine only). In addition hereto, as mentioned, our experience has shown that phenols possessing a long lateral chain have proved less advantageous than non-substituted phenols or phenols only possessing a short lateral chain.

It has also been proposed to employ various dyestuffs for protecting medicaments against any premature decomposition in the stomach and in the intestine. We do not claim the employment of dyestuffs. Dyestuffs are saddled with the substantial drawback from the practical point of view that they are all too easily liable to make colour marks on clothing and sometimes even on body tissues.

LAJOS PAUNZ.
GYÖRGY SASVÁRI.

Published May 11, 1943

Serial No. 322,257

ALIEN PROPERTY CUSTODIAN

DISINFECTING PRODUCT AND PROCESSES FOR ITS MANUFACTURE AND APPLICATION

Boruk Carnauh, Paris, France; vested in the Alien Property Custodian

No Drawing. Application filed March 4, 1940

For disinfecting surfaces contaminated with yperite, it has been proposed to neutralize this liquid by means of chlorinated pastes, in particular of calcium chloride or, preferably, of calcium hypochlorite powder mixed with water. It has been found, however, that an aqueous chlorinated solution does not satisfactorily penetrate yperite.

This has been more or less remedied by adding emulsifying or wetting agents to the chlorinated solution. However, these improved chlorinated solutions surround the yperite without dissolving it and they are especially unsatisfactory when the surface on which the yperite is deposited is fatty, or porous, as are a large number of surfaces, in particular wood, cement, leather, human or animal skin, the ground, plaster, certain paints.

The present invention has for its object a novel decontaminating product which is suitable, even in the case of the above mentioned porous substances, for neutralizing yperite and like products.

Said product is characterized by the fact that the excipient in which the chlorinated powder is placed in suspension is a substance which has a great power of penetration into said porous substances, is very miscible with yperite or like products, and with fatty substances, has little or no reaction with the chlorinated powders, and to which there is added, preferably at the instant when it is to be used, a few per cent of water, or better of an agent (which will be called accelerator) containing a solvent which is miscible with water and a little water.

The result obtained appears to be due to the following cause: yperite behaves physically like a fatty substance and penetrates deeply into the pores; in order to reach it therein and to mix with it, it therefore requires a substance which is also very penetrating and very miscible therewith.

Certain excipients, whereof the satisfactory result has already been checked, are indicated hereinafter by way of examples.

When the calcium chloride or calcium hypochlorite powder is placed in intimate contact with a solvent, the latter becomes charged, under certain conditions which will be explained hereinafter, with chlorine and perhaps with hypochlorous acid which it can thus supply to all the parts of yperite with which it mixes. The solvents which appear to give the best results as excipients are chlorinated solvents, for example orthodichlorobenzene, tetrachlorethane, trichlorethylene, or again petroleum, gas-oil, benzole etc.

It is also possible to use as excipients fatty substances such as paraffin oil, cod-liver oil, vaseline, lanoline etc. The products mainly comprising these fatty substances and petroleum, gas-oil etc. are particularly recommended for the skin, since they have no irritating action, adhere well and thus prevent burns from the chlorinated powders, which burns may occur when said chlorinated powders are used in aqueous solution.

It is also possible to use as an excipient a mixture of solvents and of fatty substances, for example a mixture of: petroleum, vaseline, lanoline, cod-liver oil.

In the case in which the surface impregnated with yperite is damp, there will be added, either as a mixture, or by spraying the contaminated surface, before or after it is treated with the decontaminating product, a solvent which is miscible with water so that the latter shall not prevent said solvent from penetrating into the pores. Said solvents may for example be alcohols, in particular ethyl alcohol, or again ethyl acetate, methyl acetate etc.

The solvents of the orthodichlorobenzene, petroleum, or benzole type, and also the fatty substances mentioned, are advantageous as regards storing, since they are not hygroscopic; with those excipients of this type which are liquid, the chlorinated powder incorporated therein deposits after a time under a layer of liquid which protects it from damp; with the fatty substances the mixture persists and the protection of the chlorinated powder from damp is also obtained. Calcium chloride, which as is known quickly becomes deliquescent in air, can therefore be used in this manner.

Some solvents, in particular those which are miscible with water, produce a reaction and evolve chlorine when the chlorinated powder is incorporated. This reaction is strong or weak according to the solvent. In the case in which some of such solvents could be used, it is advantageous only to make the paste at the instant when it is to be used, in order to take advantage of this abundant initial production of chlorine.

Some other solvents, in particular orthodichlorobenzene, petroleum, gas-oil, benzole, tetrachlorethane, trichlorethylene, etc. only become charged with a very small quantity of chlorine or even not at all. However, they produce a more abundant quantity of free chlorine if a little water is added, in sufficient quantity with respect to the chlorinated powder, or better still a mixture of water-miscible solvent and water, for example a mixture containing 10 of water, 50 of alcohol, 50 of ethyl acetate. It is advantageous only to add

this water or this accelerator at the instant when the product is to be used, and for example in a proportion of 1 to 10%.

The inventor has found that the free chlorine which is transferred from the chlorinated powders to the solvent gradually evaporates from the latter, thereby causing a fresh supply to come from the powders. Consequently, in order that the solvent shall always be well supplied with chlorine and always ready to neutralize the yperite into which it penetrates, it is advantageous for the mixture between the powder and the excipient to be as intimate as possible within the paste.

In order to produce and maintain this intimate contact, it is advantageous to grind the chlorinated powder in the liquid or fatty excipient and furthermore, in certain cases and with certain liquid excipients, to mix with the paste a small quantity of a pigment which is capable of remaining a very long time in suspension and acts as a suspension support for the chlorinated powder, for example lamp-black, fine asbestos powder, colloidal silica.

By way of concrete examples, the following are some paste formulae which have given good results:

Product No. 1

	Grams
Orthodichlorobenzene	300
Calcium hypochlorite	100
Accelerator	20

The accelerator is preferably only added at the instant when the paste is to be used.

Product No. 2

This product only differs from product No. 1 by the addition of 2 gm. of lamp-black.

This product is particularly stable; it is suitable in case of prolonged storing.

Product No. 3

	Grams
Petroleum	100
Vaseline	50
Calcium hypochlorite	40
Accelerator	0.5

This product is prepared by grinding; it is intended for the de-contamination of human or animal skin; as it always has to be ready for instant use, it is stored after mixing with the accelerator.

The mechanism of the action of a de-contaminating product according to the invention on a fatty or porous surface substance contaminated with yperite appears to be as follows:

At each point it touches on a fatty or porous surface, yperite forms a spot which spreads at the surface and penetrates deep into the pores. Since the excipient is a solvent for fats or is at any rate miscible with them and has a great power of penetration, it has a marked tendency to mix with the fats and to penetrate deeply into the pores where the yperite itself has already also penetrated very deeply; as said excipient is very miscible with yperite, it can penetrate by mixing therewith into the entire volume occupied by the latter; the chlorinated powder remains at the surface of the substance and owing to its intimate mixture by grinding in the excipient and to its being held in suspension, it forms a continuous layer on said surface. The chlorine dissolved in the excipient which has intimately mixed with the yperite acts to neutralize the latter; the yperite, which owing to its diffusion in the excipient comes up from the bottom of the pores to the surface, encounters the continuous layer of chlorinated powder and is thus completely neutralized; this diffusion of the yperite in the excipient tends to equalize the yperite contents at all the points of the surface which are covered by the excipient, whereby the attacking power is greatly decreased at the places where there were concentrated masses of yperite.

In the case in which the porous substance contains traces of moisture, it would appear that the solvents which are not miscible with water, such as orthodichlorobenzene, while losing none or very little of their power of penetration into the pores, are incapable of carrying the chlorine beyond a certain depth. This does not prevent them from acting usefully, since owing to the above mentioned phenomenon of reciprocal diffusion and penetration of the excipient and the yperite, the yperite partially rises from the depths of the pores in the excipient, encounters the upper part of the latter which contains the most chlorine, then the continuous layer of chlorinated powder deposited at the surface; it is thus neutralized; the yperite concentration and consequently the attacking power decrease; as the phenomenon continues, all the yperite becomes neutralized after some time.

These products for neutralizing yperite may of course be used for neutralizing any similar substance, lewisite for example, which is converted by chlorine into a harmless substance.

These products may also be used in agriculture or for disinfecting floors, for destroying insects.

BORUK CARNAUH.

Published May 11, 1943 Serial No. 323,160

ALIEN PROPERTY CUSTODIAN

COMBINED REVERSING METHOD AND REVERSING DEVICE FOR THE HEATING GAS, THE AIR AND THE WASTE GAS FOR USE IN CONNECTION WITH INDUSTRIAL FURNACE PLANTS OPERATING WITH ALTERNATING GAS AND AIR CURRENTS

Otto Reiner, Rheinhausen-Nrh.-Hochemmerich, Germany; vested in the Alien Property Custodian

Application filed March 9, 1940

This invention relates to an improved method, as well as to an improved device, for reversing the heating gas current, the air current and the waste-gas current, also for supplying the air, this method and device being intended for use in connection with industrial furnace plants operating with alternating gas and air currents.

It is already known to shut-off the heating gas current prior to the reversal of the furnace by means of disk-valves, throttle flaps or slide-valves in order to prevent chimney losses during the reversal. This manner of operating causes, however, an increase of the pressure in the gas conduit so that other furnaces connected up to the same gas conduit receive too large amounts of the gas, of which, therefore, a part escapes in unburnt state through the chimney because of the want of air. Besides, any combustion of gas in the upper furnace ceases when the heating gas current is shut-off, in consequence whereof no smoke gases for producing a draught in the chimney are generated, whereby the upper furnace is sucked empty during this time and cold air (false air) finds access into the upper furnace and the heating chambers. The consumption of heat units for compensating that drop of temperature is, besides, still larger than the consumption due to the loss of heating gas, in consequence whereof the losses of chimney gas cannot be wholly prevented by a prior shutting-off of the heating gas current.

It is furthermore, known to reverse, while the furnace is being reversed, first the heating gas current and thereafter the air current in order to attain separate sucking-off of the current of the return gas and the current of the return air through the chimney so that no explosions in the chimney flue can occur. This procedure suffers, however, from the drawback that the combustion of the gas in the furnace side having been heated up to then does not uniformly cease and that after the reversal of the furnace the gas and the air do not uniformly escape whereby a substantial extent of the fusing time and an increased gas consumption is entailed.

The object of the present invention is to obviate the above-mentioned disadvantages of the former reversing methods and devices by an improved method and an improved device in which the gas supplied to the furnace is continually deflected without any loss of gas by the chimney conduit and without any throttling or shutting-off. A characteristic feature of the invention is that while carrying out the reversing procedure first the abstraction of the waste-gases from the gas chamber of that furnace side which up to then had been in connection with the discharge chimney through said chamber, as well as through the appertaining air chamber, is interrupted and thereafter the waste-gases from said furnace side are sucked away solely through the air chamber until the reversing has been finished, this sucking taking place in an increased degree relatively to the preceding sucking; thereafter, the supply of air also to the furnace side having been heated up to then is interrupted so that the air supply to both furnace sides is shut-off in the common air conduit; simultaneously therewith the reversal of the supply of the heating gas to, and the withdrawal of the waste-gas from, the two furnace sides, as well as the supply of air to the furnace side now to be heated, are effected with such a small delay relatively to the supply of the heating gas to this furnace side that the current of air and the current of waste-gas meet one another at the burning place of this furnace side which is now to be heated so that in the moment in which the reversal has been finished the correct heating of the furnnace side in question takes place at once.

With this improved method the supply of gas to the furnace takes place, thus, uninterruptedly so that after the reversal of the gas current the smoke gases present in the regenerative chambers of the furnace side having been heated up to then are pressed into the upper furnace during the interruption and can be sucked away through the chimney, whereupon only then, in that moment in which the heating gases enter into the furnace, also the supply of the air into the upper furnace takes place; thus, just in the proper moment.

Another advantage which the present improved method presents is that owing to the continuous supply of the gas smoke gases effecting the sucking action in the chimney are likewise continuously available for the same so that the chimney is never able to suck in cold air (false air) into the upper furnace and into the heating chambers, whereby equally high temperatures in the upper furnace are attained.

Still another advantage presented by the improved method is that the supply of the gas and of the air to the furnace side having been heated up to then ceases proportionally and the escape of the gas and the air after the furnace reversal at the burner take place simultaneously so that neither an oxidising, nor a reducing combustion of the heating gases occurs, nor is an excess of gas or of air pressed to the upper furnace.

Finally, also the advantage exists that the return air current coming from the air generator chambers is sucked off through the chimney separately from the return gas current coming from the gas generator chambers, the gas and the air being simultaneously reversed, whereby any possibility of the occurrence of an explosion is completely prevented.

The improved method is carried out preferably by means of the improved device forming likewise a part of the present invention and being illustrated diagrammatically and by way of example on the accompanying drawings on which Figure 1 shows a plan of this device, Figure 2 a section in the plane II—II of Fig. 1; Fig. 3 a section in the plane III—III of Fig. 1, and Figure 4 a section in the plane IV—IV of Fig. 1.

In this constructional form of the device is assumed that the shutting-off members are formed by disk valves combined with a water seal, but I wish it to be understood that instead of disk valves also valves of another design, as well as other suitable shutting-off members, may be used without affecting the method in any manner.

In said figs. is, furthermore, assumed that the right-hand side of the furnace plant with its reversing device, or reversing members respectively, which side comprises the gas chamber G*r* and the air chamber L*r*, is connected up to the conduit K which, in turn, is connected up to the chimney, whereas the gas chamber G*g* of the left-hand furnace side is supplied with heating gas and the air chamber L*g* of said side with compressed air.

1 (Fig. 3) denotes the common gas supply conduit below which is arranged a change-over flap 4 located between the branch pipes 3*g* and 3*r* which terminate at the heating gas reversing valves 2*g* and 2*r*, the said flap 4 shutting-off in the position shown in Fig. 3 the communication between the conduit 1 and the pipe 3*r*. The valve 2*r* is closed, whereas the valve 2*g* is open. In the conduit leading from the gas chamber G*r* to the chimney is arranged a disk valve 5*r* and in the conduit leading from the gas chamber G6 to the chimney is arranged a valve 5*g*. In the position of these valves as shown the valve 5*r* is open and the valve 5*g* closed. In the common air supply pipe 6 which leads to the air chambers L*r* and L*g* is arranged a throttle flap 7 at the place shown in Figs. 1 and 4. When this flap is turned from the position shown in Figs. 1 and 4, in which it is open, into the other position in which it is closed the supply of air to the air chambers of both sides of the furnace will be interrupted.

In the pipe leading from the common air supply pipe 6 to the air chamber L*r* is arranged a valve 8*r*, and in the pipe leading from said pipe to the air chamber L*g* is arranged a valve 8*g*. Furthermore, a valve 9*r* is arranged in the pipe connecting the air pipe L*r* with the chimney, and a valve 9*g* is arranged in the pipe connecting the air pipe L*g* with the chimney. In the position of the several members mentioned the valve 8*r* is closed and the valve 8*b* open, whereas the valve 9*r* is open and the valve 9*g* closed. There is, therefore, in these positions of these valves the left-hand side of the furnace heated, whereas the right-hand side of the same communicates with the chimney through the gas chamber G*r*, as well as through the air chamber L*r*.

If now the supply of gas and of air to the furnace shall be reversed, first an electromotor (not shown) is started in known manner and rotated with such a low speed that the valve 5*r* is slowly lowered and at the same time the valve 2*r* is opened. The valves 5*r* and 2*r* are connected with one another by a rope, and as the valve 5*r* is heavier than the valve 2*r* the valve 5*r* will lift the valve 2*r* when it is lowered. Owing to the slow movement of the valve 5*r* the communication between the gas chamber G*r* and the chimney will slowly interrupted and when the valve 5*r* has been completely closed the waste gases will be sucked off from the right-hand side of the furnace still strough the air chamber L*r*, this sucking off of the gases from the right-hand side of the furnace through the air chamber L*r* taking place more strongly than the gases had been sucked off prior thereto through the air chamber L*r*.

After the valves 2*r* and 5*r* have been reversed, the change-over flap 4 is suddenly turned over by means of a motor provided for it, and simultaneously therewith also the throttle flap 7 in the air pipe is suddenly turned over by an electromotor or any other known electromagnetic implement into its closing position as shown in Fig. 4 so that from this moment also the air supply to the air chamber L*g* is interrupted and, thus, none of the two furnace sides receives air. From the moment of the reversal of the shutting-off devices 4 and 7 the heating gas is supplied on the right-hand side of the furnace into the gas chamber G*r* but, which is essential, no air is supplied any more to the air chamber L*g* of the left-hand side of the furnace whereby is obviated that unburnt air, viz. false air, enters into the upper furnace through the air chamber L*g* of the left-hand side of the furnace and conducts oxygen to the molten steel, the quality of which would be deteriorated thereby.

Besides, by shutting-off the air supply by means of the shutting-off device 7 the effect is attained that no cold air is pressed into the chimney flue whereby the draught in the chimney would be reduced.

After the position of the change-over flap 4 has been reversed and the shutting-off device 7 has been closed, the electromotor pertaining to the valves 8*r* and 8*g* are started whereby the valve 8*r* will be opened and the valve 9*r* will be closed and also the valve 8*g* will be opened and the valve 9*g* closed. There are, thus, all valves engaged in the air supply reversed at the same time.

When this has been effected the shutting-off device 7 located in the blast conduit is again opened and either simultaneously therewith or a moment thereafter the position of the valves 2*g* and 5*g* is reversed wherewith the reversing procedure will be completed.

From the moment of the re-opening of the shutting-off device 7 air flows to the right-hand furnace side, viz. into the air chamber L*r*, and the reversal of the air supply takes place relatively to the reversal of the gas supply by the opening of the valve 2*r* which such a delay (preferably a regulable one) that in that moment in which heating gas arrives at the burning place of the right-hand furnace side also the air arrives at said place so that now the heating of this side of the furnace commences without solely gas or solely air being pressed into the right-hand side of the furnace. This is rendered possible by the circumstance that the way on or through which the gas passes to the furnace is longer than the way on or through which the air passes from the reversing device to the furnace, so that, for instance, 25 seconds will elapse between the points of time at which the flap 4 is turned over and the gas arrives at the place of burning, whereas only 15 seconds will elapse from

the point of time at which the shutting-off device is again opened, so that 15 seconds are available for the reversal of the air supply.

When the above described reversing procedure has been finished, the right-hand side of the furnace is now being heated, whereas the left-hand side of the same is connected with the chimney through the air chamber L*g* and the opened valve 9*g*, as well as through the gas chamber G*g* and the opened valve 5*g*.

The provision of a separate shutting-off device 7 for the temporal interruption of the supply of air, instead of effecting this interruption by stopping the fan producing the compressed air, establishes the means for the proper design of the reversing device, as stopping and starting a fan requires by far too much time.

A reversing device suited for carrying out the present improved reversing method can be designed, it is true, also without a change-over flap, such as 4, but a thus modified construction would operate less advantageously. With such a modified construction the driving device for the several valves must be so designed that (starting again from the position of the valves as in Fig. 1) first the valve 5*r* is lowered whereupon first of all waste-gas is sucked away from the right-hand side of the furnace only through the air chamber L*r*. Then the gas valves 2*r* and 2*g* are reversed which causes the reversal of the gas supplied to the furnace, and simultaneously with the movement of said valves the supply of air is interrupted by the shutting-off device 7, whereafter the further reversing procedure takes place practically in the same manner as above described, the only exception being that, as the valve 2*g* is being closed already while the valve 2*r* is being opened, only the valve 5*g* need be opened in the moment in which the reversal of the air is being finished.

It is, under circumstances, also possible to do without the separate shutting-off device, but the control device must then be so designated that after the gas valve 2*r* has been opened, first the air valve 8*g* is closed, and only then the other valves are reversed, so that, with this reversing procedure, the supply of air to the two furnace sides is likewise stopped for a certain period of time. The procedure entails the necessity that the reversal of the valve 8*g* is in lead of the reversal of the valves 9*r*, 9*g* and 8*r*.

I am describing hereinafter the complete reversing procedure with a plant lacking a change-over flap, such as 4, and a shutting-off device, such as 7.

After a push-button switch (not shown) has been actuated, first the shutting-off member 5*r* is closed, whereby the waste-gas current flowing from the gas chamber G*r* to the chimney K is interrupted. The entire amount of the waste-gas is sucked away through the air chamber L*r*. Now the following shutting-off members are moved simultaneously, viz. the valve 2*r* is opened and the valves 2*g* and 8*g* are closed, whereby the gas current is continually deflected from the left-hand side of the furnace to the right-hand side thereof. As the valves 2*g* and 8*g* have been closed at the same time, the combustion of the gas in the left-hand side of the furnace ceases proportionally, whereby neither an oxidising combustion, nor a reducing combustion of the heating gas can arise. The supply of air to the furnace is interrupted in that the shutting-off member 8*g* is closed. This interruption of the supply of air must take place in that the air chamber, counter to the gas chamber, is filled earlier by about 15 seconds. Now the shutting-off members 9*r* and 9*g* are likewise moved at the same time and with equal transverse sections, the member 9*r* being closed and the member 9*g* opened, whereby the waste-gas current is deflected from the air chamber L*r* to the air chamber L*g*. The entire amount of the waste-gas is sucked away by the chimney through the air chamber L*g* and simultaneously therewith the return air of the air chamber L*g* is sucked away together with the waste-gas flowing to the chimney, whereby is prevented that the return air comes in contact with the return gas from the gas chamber G*g* and, therefore, no ignition in the chimney flue can occur. Thereafter the shutting-off member 8*r* is opened by the intermediary of a time relay and the current of air is thereby released with a certain delay so that the burner head is fed with gas and with air at the same time. Hereafter also the shutting-off member 5*g* is opened whereby the current of gas will be liberated as soon as the return air still present in the air chamber L*g* has been completely sucked away by and through the chimney, there being simultaneously therewith also the return gas still present in the gas chamber G*g* sucked away. All this having been accomplished, the furnace is reversed and operates with continual supply of gas and continual withdrawal of waste-gas in known manner.

OTTO REINER.

PUBLISHED
MAY 11, 1943.
BY A. P. C.

O. REINER

COMBINED REVERSING METHOD AND REVERSING DEVICE FOR THE HEATING GAS, THE AIR AND THE WASTE GAS FOR USE IN CONNECTION WITH INDUSTRIAL FURNACE PLANTS OPERATING WITH ALTERNATING GAS AND AIR CURRENTS

Filed March 9, 1940

Serial No. 323,160

2 Sheets-Sheet 1

Fig. 1

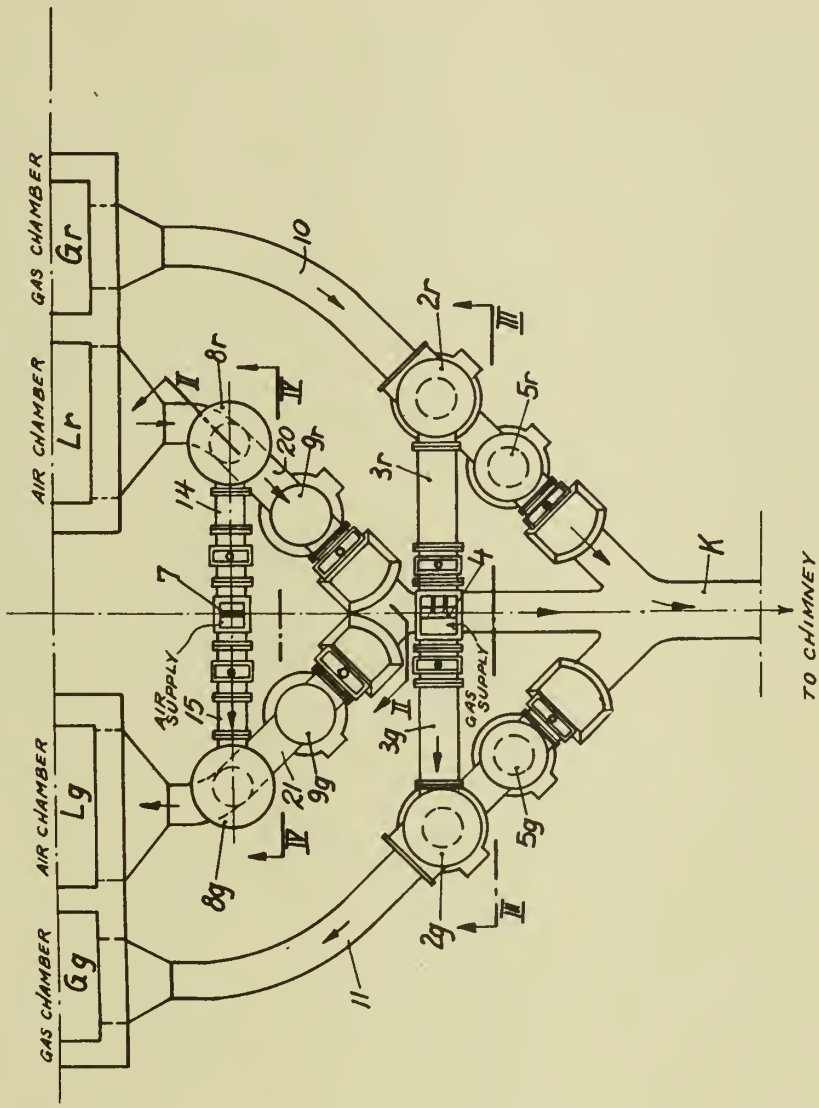

Inventor
OTTO REINER

By Francis E. Boyce

Attorney

PUBLISHED

MAY 11, 1943.

BY A. P. C.

O. REINER

COMBINED REVERSING METHOD AND REVERSING DEVICE FOR THE HEATING GAS, THE AIR AND THE WASTE GAS FOR USE IN CONNECTION WITH INDUSTRIAL FURNACE PLANTS OPERATING WITH ALTERNATING GAS AND AIR CURRENTS

Filed March 9, 1940

Serial No. 323,160

2 Sheets-Sheet 2

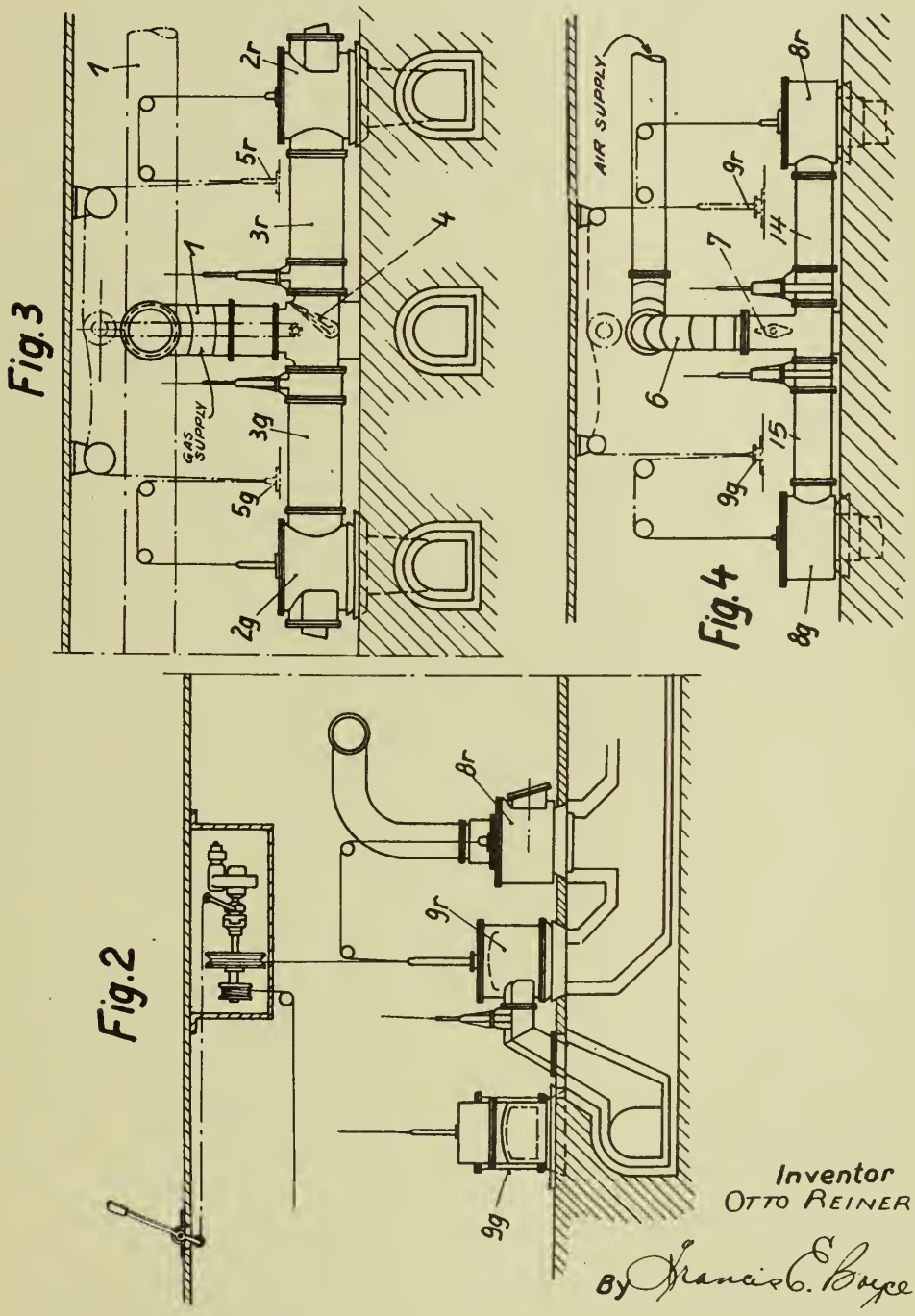

Inventor
OTTO REINER

By Francis E. Boyce

Attorney

Published May 11, 1943

Serial No. 324,232

ALIEN PROPERTY CUSTODIAN

REDUCING MACHINES

Ludwig Pallmann, Zweibrucken, Germany; vested in the Alien Property Custodian

Application filed March 15, 1940

My invention relates to improvements in reducing machines, and are more particularly in reducing machines comprising a pair of rotary members disposed one beside the other with their axis parallel and each bearing a reducing arm or arms, the distance between the shafts being less than the sum of the lengths of the arms of the said members, so that the paths of the said arms partly coincide. In machines of this type the said members are rotated in the same direction, and the arms are placed on their members so that they clear each other. Machines of this type have heretofore been used for reducing granular material and the reducing action was based on the impact of the material on the said arms. The object of the improvements is to provide a machine of this type by means of which elongated material, such as wood, waste leather, rubber hoses and the like can be reduced, and with this object in view my invention consists in constructing the said reducing arms in the form of blades and providing means for positively conveying the said material into position for being acted upon by the said blades, the said conveying means being constructed so that the material is held thereby while the blades act thereon.

For the purpose of explaining the invention an example embodying the same has been shown in the accompanying drawing, in which the same letters of reference have been used in all the views to indicate corresponding parts. In said drawing

Fig. 1 is a sectional elevation of the machine partly in section,

Fig. 2 is a top plan view of Fig. 1, the casing enclosing the blades and the gear box being shown in section, and

Fig. 3 is a sectional elevation taken on the line 3—3 of Fig. 1.

In the construction shown in the figures the machine comprises a pair of rotary shafts *a* suitably supported in the end walls of a gear box *b* and adapted to be rotated in the same direction by means of gear wheels *c* and *d* mounted in the said gear box *b*, one of the gear wheels *c* being driven by an electric motor *f*. To the shafts *a* weighted disks *g* are secured which are located within a casing *e*, and each of the said shafts carries two blades *h*, and the distance between the shafts *a* is smaller than the sum of the lengths of the blades *h* taken from the axes of the shafts *a* to the ends of the blades, so that the paths of the blades partly coincide, as has been shown in Fig. 3 in broken lines. The blades *h* rotate in the same plane and they are disposed so that they do not interfere with each other when they rotate. In the construction shown in the figures in which each disk *g* carries two blades *h* the blades of the said shafts *a* are displaced with relation to each other at an angle of 90°. As shown, the blades *h* of each disk *g* are provided by a single member embedded in a groove *i* made in the disk *g* and secured thereto by means of screws *j*. The disks *g* are comparatively heavy so that they have a function similar to fly wheels.

Laterally of the casing *e* and the blades *h* means for conveying a skein *s* of material to the blades are provided, and, as shown, the said means consist of upper and lower series of rollers *n* and sprocket wheels *k* on which endless chains *m* are trained. The said chains and sprocket wheels and guide rollers *n* are driven from a motor *o* through the intermediary of gear wheels *p* and a shaft *q*. The said rollers and sprocket wheels are mounted so as to be movable in vertical direction, so as to adapt themselves to skeins of different thicknesses.

To the bottom part of the casing *g* a shoot *r* is connected.

The operation of the machine is as follows:

The disks *g* carrying the blades *h* are rapidly rotated in the direction of the arrows *x* shown in Fig. 3 from the electric motor *f* through the intermediary the gear wheels *d* and c, c. The material to be reduced is supplied in the form of a skein *s* by means of the rollers *k* into the paths of the blades *h*, and it is held by the rollers *k* while the blades act thereon. The reduced material is delivered through the shoot *r*.

By means of my improved machine, which is provided with blades *h*, I am enabled to reduce material which is coherent in a form similar to skeins, such as boards of wood, waste leather, rubber hoses, etc. The said material is conveyed to the blades and held by the conveying device while the blades act thereon, so that the blades are able to break up the structure of the material and to reduce the same. This result is attained by the said arms *h* being in the form of blades which move during the reducing action in opposition to each other and thus alternately act on the material from opposite sides. By the said alternating blows exerted by the blades on the material from opposite sides and in rapid succession, the material is completely reduced, because, by being held in position by the conveying device, it is not able to yield to the blades.

In machines in which the blades move in opposite directions, frequently an energetic movement of the air is caused by the rotary blades. In my improved machine, in which the blades rotate in the same direction no such circular movement of the air is produced.

LUDWIG PALLMANN.

PUBLISHED

MAY 11, 1943.

BY A. P. C.

L. PALLMANN

REDUCING MACHINES

Filed March 15, 1940

Serial No. 324,232

Fig. 1

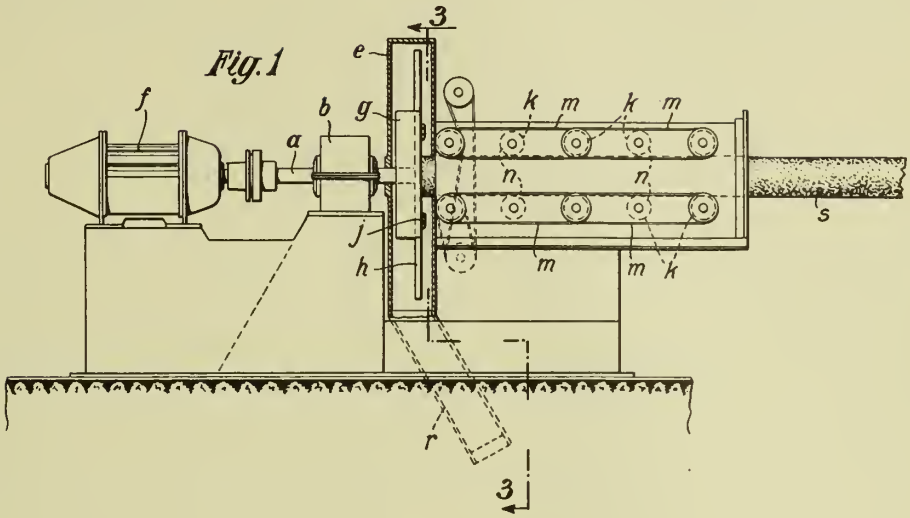

Fig. 2

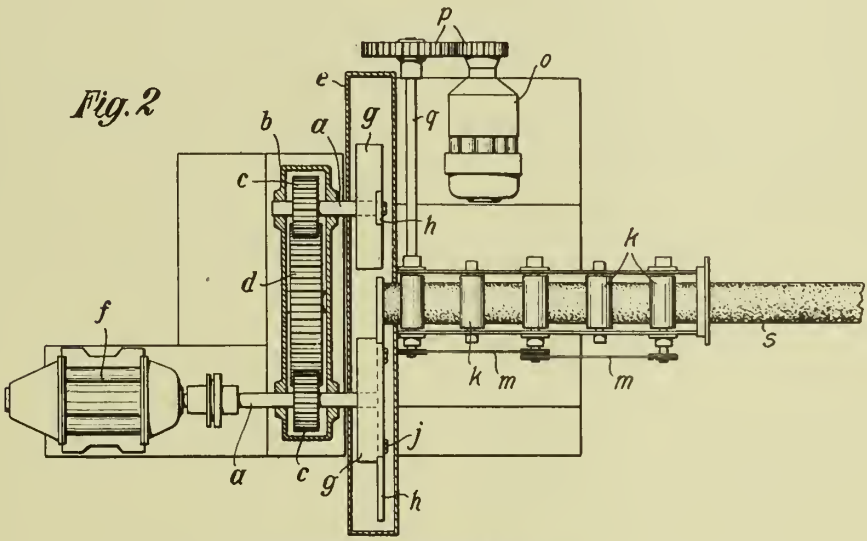

Fig. 3

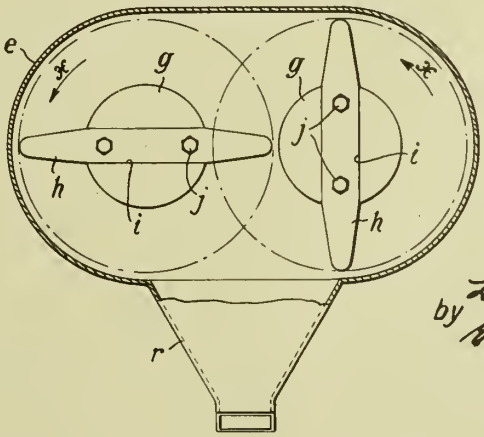

Inventor:
L. Pallmann
by E. F. Wenderoth
Attorney:

Published May 11, 1943

Serial No. 326,141

ALIEN PROPERTY CUSTODIAN

CONTROLLABLE COWLING FOR AIR-COOLED INTERNAL COMBUSTION ENGINES

Reinhard Ramshorn, Munich/Grafelfing, Germany; vested in the Alien Property Custodian

Application filed March 27, 1940

It is known to use e. g. for radial engines an annular element arranged slidably in the direction of axis on the engine cowling or spreading flaps arranged circumferentially on the cowling for the purpose of controlling the cross-sectional area of the air—resp. gas outlet.

Regulating devices of the above type, however, in connection with the construction of the baffles have the great disadvantage that they permit an efflux of the air resp. exhaust gases in a direction including an oblique angle with the direction of flow passing outside the cowling, so that enlargement and eddying of the boundary layer takes place, which forcibly causes an increase of the profile drag. When utilising spreading flaps the increase of this drag is most striking. A further circumstance of an unfavourable effect is that by varying the outlet cross-sectional area simultaneously the control of the air quantity is effected and thus up to now mostly it was not possible to equalise velocity and pressure of air resp. gases to the conditions prevailing in the atmosphere, so that always a difference in velocity resp. pressure of a varying amount exists thus still increasing the above mentioned unfavourable effects.

In order to obviate these disadvantages according to the invention it has been proposed to control the quantity of air not by regulating the outlet cross-sectional area but at another point e. g. at the air inlet of the engine cowling, e. g. by a control device consisting of a cap of the like movable in the direction of travel and to provide an eventually annular outlet passage or several outlet passages of diffuser type extending approximately parallel to the longitudinal axis of the engine and arranged at the periphery of the nacelle resp. of the fuselage of an aircraft resp. vehicle, one wall of said outlet passages representing the wall of the nacelle resp. of the fuselage whilst the other wall is formed by an annular element or the like, slidable in the direction of the langitudinal axis and eventually subdivided resp. provided with recesses.

By the proposal according to the invention it is possible to provide an efflux of the escaping gases—the word gases taken in a general sense—in the direction of flow of the outer air and in any case to choose the length of the diffuser-like passages and the cross-sectional area of the outlet conditioned therethrough, by displacing the annular element resp. the parts thereof so that the amount of velocity resp. of pressure of the gases escaping from the passages is equal resp. approximately equal to the corresponding amounts of the atmosphere passing along the passages in order to avoid by equalising the velocities resp. pressures any kind of increase in drag to a far extent. Of course it is also possible in order to accelerate the boundary layer flowing over the adjacent fuselage par resp. in order to originate an additional propelling force to permit the gases to flow out with a higher velocity.

A great advantage according to the invention is to arrange the annular element resp. its corresponding control member possibly in extension of the nacelle—resp. fuselage wall or of the engine cowling inserted seen in the direction of travel in advance thereof and to effect the regulation of the length of the passages resp. of the outlet cross-section or cross-sections by displacing the corresponding control member and to determine the diffuser-like enlargement of the passage cross-sectional area in the direction of flow of the gases only by correspondingly dimensioning of the diameter resp, cross-sectional area of the nacelle resp. of the fuselage.

With regard to the course of flow it can further be of advantage to gradually enlarge again the above mentioned diameter resp. cross-sectional area in the direction of flow, taking regard however to an aerodynamically favourable form, and that e. g. to an amount corresponding to the dimensions of the annular element, so that the original cross-sectional areas can be obtained not only for reasons of space but at the same time an acceleration of the boundary layer and an equalisation of the differences eventually still existing, with regard to velocity resp. the direction of flow takes place.

A far-reaching equalisation of this magnitudes is realised according to the invention already within the fairing parts through the circumstance that the gases are forced to flow from the collecting space behind the cylinders first through a contraction constituted between the nacelle or the fuselage and the annular element resp. the wall in advance thereof, before reaching the diffuser-like passage resp. passages in which the acceleration is followed by a retardation of velocity to the already abovementioned amount adjustable by the displacement of the annular element, takes place.

For regulating the length of the passages resp. the effective area of the outlet cross-section and thus the outflow velocity resp. the pressure of the gases the annular element resp. its corresponding parts are used as it appears from the above. The adjustment of the latter can be effected manually or automatically by a control

device operating in response to the relative velocity and/or the pressure difference between the gases leaving the passages and the atmosphere and eventually in accordance with the regulation of the air inlet.

In an advantageous manner two stem tubes can be used for this purpose one of which being arranged within the passage to be controlled and the other exposed to the atmosphere. These tubes are connected with the part in question to be controlled in case of need by inserting a servo-motor in such a manner that an occurring difference in velocity resp. pressure will adjust this part in such a sense that the difference becomes zero or approximately zero as owing to the difference in temperature an exact equalising of velocities and pressures cannot be obtained.

As a matter of course for increasing the propelling force the regulation can be effected also in such a manner that a predetermined adjustable difference is maintained.

Further it appears to be advantageous especially for accelerating and straightening the air delivered from the engine and flowing to the passages to arrange a device comprising a nozzle and/or an adjacent diffuser connected to the outlet openings of the cylinder, which device permits the exhaust gases delivered from the engine to enter approximately in the direction of flow of the atmosphere into the space between engine and outlet passages at a velocity greater than that of the air delivered to the passages.

Further advantageous particulars are described in the following:

The drawing shows the object of the invention by one form of embodiment, representing an engine cowling in longitudinal section.

The engine cowling serving for fairing the cylinder star 1 is subdivided and consisting of a stationary part 2 and a part 4 rotating with the propeller 3. On the propeller hub 5 is arranged a cap 8 slidable in the direction of axis 7 for controlling the cross-sectional area of the annular air conduit 6 to the engine 1 is arranged, which cap has the advantage to reduce the profile drag caused by the inflow of air in any case to the smallest possible degree.

The air entering through the conduit 6 serves as usually partly to charge and partly, i. e. the remaining part, to cool the engine 1. The latter part reaches, after flowing over the cylinder star 1, the collecting space 9 behind the cylinders, in which space the junction with the exhaust gases takes place, which for straightening their stream lines, for equalising the differences in velocity, and for conforming their velocity to that of the cooling air have flown through a device connected to the outlet openings of the engine 1, each device comprising a nozzle 10 and a diffuser 11. If in this case the outflow velocity of the gases is chosen in a manner known per se greater than that of the air, the output of the fan 12 resp. of its corresponding device can be reduced or completely saved.

The air straightened and accelerated as above described is submitted to a further acceleration first when entering the annular passages 13 shaped according to the invention, i. e. when flowing through the nozzle-like contraction at 14 and is then brought in the diffuser-like part 15 of the annular passage 13 to the velocity resp. pressure of the air passing outside the cowling 2, 4, so that when these two flows join no remarkable disturbances will occur and thus an important reduction of the profile drag existent up to now is realised.

To obtain a complete equalisation of the differences in speed eventually still existing within the gases leaving the passage 13 resp. in order to accelerate the boundary layer, flowing along the wall 16 of the adjacent nacelle resp. fuselage and increasing the profile drag, it is eventually of advantage to gradually enlarge again according to the invention the diameter of the nacelle of fuselage 16 e. g. to an amount corresponding to the dimensions of cowling part 2.

As it appears from the drawing the nozzle—resp. diffuser-like shape of the passage 13 can be realised in an advantageous manner by a proper dimensioning of the respective diameter or of the cross-sectional area. The effective area of the outlet cross-section of the passage, upon which the outflow speed of the air resp. of the gases depends, is controlled, according to the invention, by means of an annular element 17 arranged in extension of the cowling part 2 and slidably in the direction of axis 7, said annular element being adjustable manually or automatically by means of a control device operating in response to the relative velocity and/or the pressure difference between the outflowing gases and the atmosphere. To obtain an automatic control e. g. two stem tubes not shown in the drawing, can be used in this case one of which being arranged within the passage 13 to be controlled and the other exposed to the atmosphere.

From all the above mentioned appears clearly that the device according to the invention is not only of special advantage for guiding the air resp. the gases flowing into the atmosphere, but also shows in connection with means for obtaining additional propelling force by utilising the energy still inherent in the exhaust gases e. g. by accelerating the cooling air current in contrast to the constructions known hitherto considerable advantages of aerodynamic nature which finally always have as a consequence an increase of efficiency of the propelling device.

It is, of course, also possible by a corresponding adjustment of the annular element 13 to cause the air resp. gases to flow out at a higher velocity than that of the atmosphere with the object to increase the propelling force.

Further, e. g. with engines mounted in the wings of aeroplanes, the passage 13 eventually can be subdivided or divided into several separate passages in such a manner that part of the air resp. gases flows out above and another below the wings. An assimilation to such conditions resp. the best possible utilisation of the same can be realised or by correspondingly dimensioning the passage cross-sectional area and/or by varying the adjustment of the parts corresponding the annular element 7.

Besides that it is possible to arrange the exhaust-gases and the cooling air separately by corresponding construction and arrangement of outlet openings and e. g. by locating the device constructed according to the invention and controlling the cooling air outflow to another place e. g. into the second half or last third of the the wing profile resp. of the fuselage of an aeroplane.

REINHARD RAMSHORN

PUBLISHED

MAY 11, 1943.

BY A. P. C.

R. RAMSHORN
CONTROLLABLE COWLING FOR AIR-COOLED
INTERNAL COMBUSTION ENGINES
Filed March 27, 1940

Serial No.
326,141

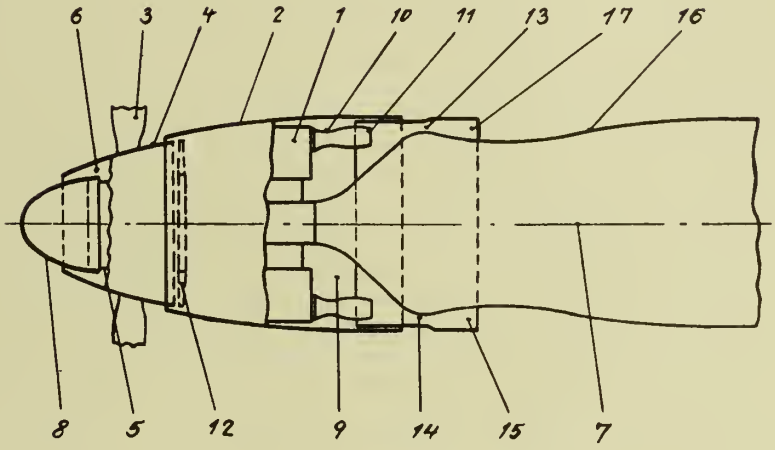

INVENTOR:
REINHARD RAMSHORN

by A. A. Klein
Maxwell Ramsey
ATTORNEYS

Published May 11, 1943

Serial No. 326,461

ALIEN PROPERTY CUSTODIAN

PNEUMATIC TOOLS, PARTICULARLY SUCH WITH RECIPROCATING PISTONS, SUCH AS ROCK DRILLS AND COAL PICKERS

Hubert Grobe, Wuppertal-Barmen, Germany; vested in the Alien Property Custodian

Application filed March 28, 1940

The holding together of the constructional elements of pneumatic tools has been effected up to the present by screw bolts arranged on the side of the pneumatic cylinder and mounted in the front and rear cover plates of the cylinder. In order that these screw bolts can uniformly take up the vibrations occurring during the service and chiefly the idle strokes of the piston, these screw bolts had to be uniformly screwed up and to remain thus; a requirement which in most cases was not fulfilled. After a quite short time elongations of the screw bolts occur already, so that the vibrations were irregularly transmitted upon these screw bolts wherefrom resulted fracture owing to the slight elasticity of the material. Another inconvenience of these screw connections consisted therein that, owing to the elongation of individual screw bolts, the constructional elements to be connected adjust themselves mutually different, so that by jamming of the sliding parts serious damages and disturbances could occur on the pneumatic tool. It has therefore been proposed to obviate these inconveniences by the provision of springs which were coordinated to the screw bolts, or by interposition of an air bolster. It has however been soon ascertained that, when a spring breaks, similar inconveniences occur by the jamming of the sliding parts owing to the unequal loading of the screw bolts. By the springs arranged around the screw bolts and which had to be very strong the tool became wider and heavier and consequently more unhandy.

According to the invention these inconveniences are obviated thereby, that one or a certain number of wire ropes preferably twist free were used for bracing the constructional elements of the pneumatic tool. Wire ropes are less sensitive to bending stresses and, owing to their great elasticity, they do not break so easily as screw bolts. As the wire ropes to be connected at similar strength have, compared with screw bolts, a substantially shorter diameter (for instance only $\frac{4}{10}$ of the diameter of the screw bolts) and as they further may be laid tightly on the cylinder wall, the weight and the width of the pneumatic tools are reduced and thereby the handling of the same is facilitated.

The bracing of the constructional elements by means of wire ropes can be effected in various manners. Instead of the screw bolts, pieces of wire ropes may for instance be used. An especially suitable construction is, however, realised when the constructional elements are braced by one or several wire ropes conducted in U-shape around the body of the pneumatic tool. Especially on heavy hammers it is best, if two or more such U-shaped wire ropes are arranged crosswise or the one over the other at a corresponding angle. By the employment of such U-shaped bracing ropes, a bracing equalisation is produced automatically in the rope halves and which remains also when the wire ropes elongate. When several ropes are used, extending crosswise the one over the other on the cylinder cover, the advantage results that, even when one of the coupling nuts or ropes breaks, the other rope or ropes take up the stresses completely and uniformly.

The bracing equalisation in the ropes extending over the cylinder cover is favoured thereby, that the wire ropes are conducted over rollers or similar elements especially at the bending points. When several wire ropes extended crosswise over a cylinder cover, these rollers are arranged displaced from the central axis of the pneumatic tool in such a manner or stepped in diameter, so that the crossing, braced wire ropes are of equal length. Owing to this arrangement it is no longer necessary to use ropes of different lengths.

As the wire ropes are of relatively short diameter and conducted tightly along the cylinder walls, they may be laid completely or partly in grooves in the cylinder walls, open on the outer side, and protected in this manner against damaging. The ends of the wire ropes are fixed on the cylinder by interposition of coupling nuts. The ends of the ropes might be directly fixed on the cylinder cover and a coupling nut provided in the middle of the rope or at any other point.

An embodiment of the invention is illustrated by way of example in the accompanying drawing, in which

Fig. 1 shows a coal picker in side elevation,

Fig. 2 is a cross-section through the cylinder,

Fig. 3 shows the bracing rope on larger scale,

Fig. 4 shows in top plan view the rear cylinder cover on larger scale.

The pneumatic cylinder 1 of the pneumatic coal picker ends on the front side in a picker part 2 which has the hole through which the chisel 3 extends and on the rear side in a cover 4 with handle. The parts 2 and 4 are fixed on the cylinder ends and all parts are held together by a twist free wire rope 5. The ends of the wire rope are fixed by means of coupling nuts 6 on projections 7 of the front part 2 of the picker and conducted in U-shape over the rear cylinder cover 4. The wire rope 5 extends on the edge of the

cover 4 over rollers 8, so that the bracing of the rope on both cylinder sides can be equalised at any time without the necessity to overcome greater friction resistances. As shown in Figs. 1 and 2 the rope 5 may be laid on the side wall of the cylinder in grooves 9 so that the rope is protected against damaging. These grooves 9 may extend over the whole length of the cylinder.

Fig. 4 shows the bracing of the constructional cylinder elements by means of two wire ropes 5, extending crosswise over the rear cover of the cylinder. The rollers 8 of the one rope are preferably arranged relative to the rollers of the other rope displaced from the central axis of the pneumatic tool, so that the bracing ropes 5 are of equal length. The equalisation of these rope lengths may evidently be ensured by displacing the two projections 7 of the front cover 2 of the cylinder or by graduating the diameter of the rollers. If in this form of construction one of the ropes 5 should break, the constructional elements are still held together by the other rope. As this rope extends transversely over the center of the cylinder cover the forces to be taken up are uniformly distributed on both sides of the rope, so that bending of the cylinder covers by forces acting on one side only and thereby damages by jamming of the sliding elements cannot occur. Instead of two ropes 5, a greater number of ropes may be provided. These ropes may consist of short pieces, which are to be fixed in eyes or in projections instead of the rollers 8.

HUBERT GROBE.

PUBLISHED

MAY 11, 1943.

BY A. P. C.

H. GROBE

PNEUMATIC TOOLS, PARTICULARLY SUCH WITH RECIPROCATING PISTONS, SUCH AS ROCK DRILLS AND COAL PICKERS

Filed March 28, 1940

Serial No. 326,461

Fig. 1

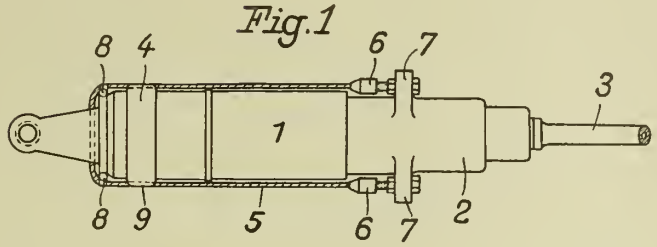

Fig. 2

Fig. 3

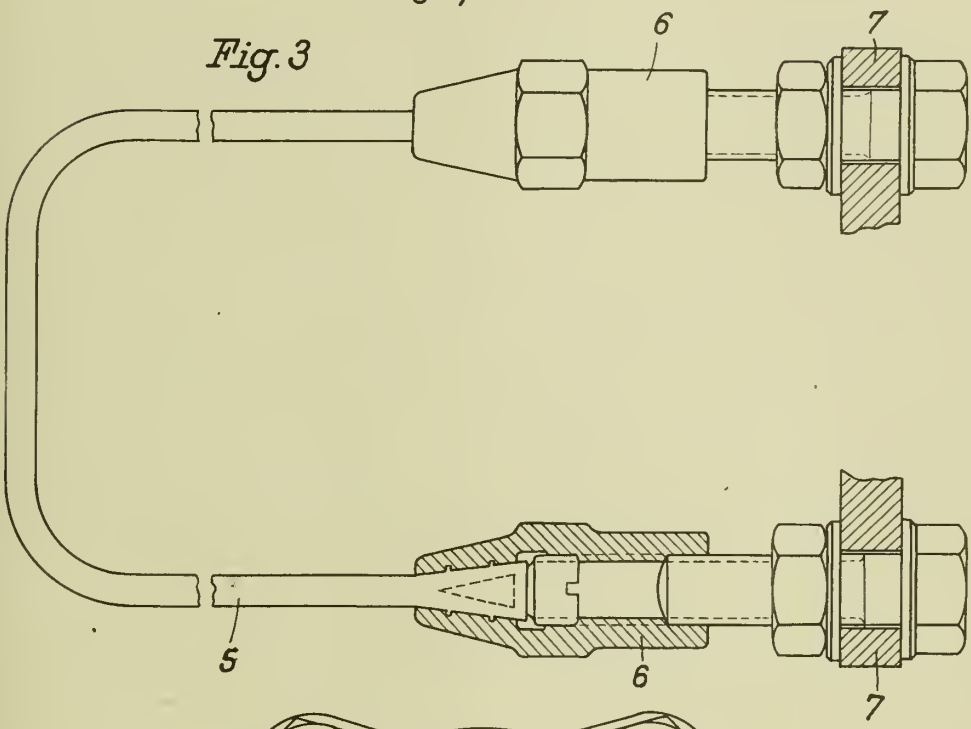

Fig. 4

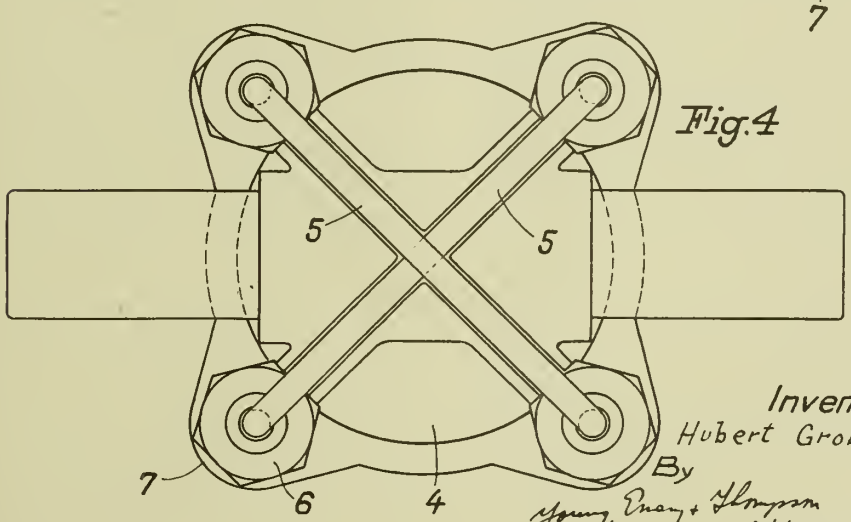

Inventor:
Hubert Grobe
By
Young, Emery & Thompson
Attorneys

Published May 11, 1943

Serial No. 326,527

ALIEN PROPERTY CUSTODIAN

REGULATING DEVICE FOR STEAM GENERATORS

Guido Wünsch, Berlin-Wannsee, Germany; vested in the Alien Property Custodian

Application filed March 28, 1940

This invention relates to improvements in vapor power plants and more particularly to plants of the type comprising a vapor generator and means for storing energy to relieve said generator with respect to the generator load changes.

The main object of the present invention is to provide means for increasing the adaptability of the generator in regard to load changes.

A further object of the invention is to eliminate the disadvantages of the storing devices hitherto known.

Other aims, objects and advantages of the invention will appear from the following description in connection with the drawing showing by way of example only one embodiment of the present invention.

This drawing schematically represents a vapor power plant comprising a once-through vapor generator, a steam accumulator, a preheated liquid accumulator and controlling means for controlling the charging and discharging of said accumulators in response to the generator load changes.

The present invention deals with the following problem. Frequently a generator needs to possess great adaptability in order to follow load changes inasmuch as it would have to adjust itself instantaneously to the new value in the case of rapid load changes. Mostly this is not possible in practice. If the load were to increase rapidly from, say, 50% to 100%, the supply of heat—to take one of the essential factors in the operation of a generator—for instance, would immediately have to be doubled. Experience proves, however, that a certain minimum space of time has to be reckoned with for this increased supply to become effective and hence for the steam production likewise.

This difficulty in steam generator operation is more particularly noticeable in generators of small water content, for instance in once-through vapor generators. The adaptability of the latter is further limited inasmuch as the storing capacity on the one hand, on account of the inconsiderable water content in comparison with that of (drum) boilers, is considerably less and further by the fact that the delay in the water circulation in pipe generators impairs their adaptability to load fluctuations. When the load changes rapidly, the effective super-heater surface changes in an undesirable manner resulting in considerable temperature fluctuations in the super-heated steam even if the absolute change in the load is comparatively small.

In order to reduce the reaction of the load changes to the generator, it is known to provide a vapor accumulator for storing vapor upon any decrease in the generator load and for discharging the stored-up vapor upon an increase in the generator load with respect to a predetermined load value. The well known power plants of this type are provided with controlling means which operate in response to the load change, i. e. the deviation of the actual load from said predetermined load value. To this end the controlling means are made to be responsive to the absolute steam pressure variations or steam quantity variations in the main steam line caused by the load changes. With such control the vapor accumulator becomes effective only to a small extent if the absolute load variation is slight, and in this respect it is to be noted that the reaction of the load changes to the generator is not only dependent on the load variation per se, but also on the velocity at which the variation occurs, therefore, even if the load variation per se is slight, the reaction may be considerable if said variation occurs rapidly. It is to be borne in mind that a certain space of time is necessary for the generator to follow a load change. Thus, for instance as experience has taught, a once-through vapor generator must not be exposed to a greater load change than 10% per minute. Therefore due to its limited adaptability to load changes the generator requires a certain length of time for responding to these changes. In the event of the load variation per se being slight while the load variation velocity exceeds the value referred to above, the generator in following the load changes will lag more or less behind the actual rate of load change. On the other hand, the vapor accumulator controlled according to the pressure variations will relieve the generator to the same extent regardless of the velocity of the load variation. Obviously the relief action on the part of the accumulator, while sufficient at slight load variation velocities, in the case of great velocities of load changes must be inadequate for protecting the generator. For this reason adequate protection cannot be obtained either by means of an accumulator controlled merely in response to the load variation per se.

Now if the generator is not sufficiently relieved by the vapor accumulator, more time is required for the generator to attain the requisite new load condition. Accordingly the accumulator must be adapted to remain effective for a correspondingly longer period, i. e. the accumulator should possess a greater storing capacity.

The present invention is based on the con-

ception that these difficulties may be overcome by controlling the storing means in response to the load variation velocity. In this way the generator will be effectively relieved upon rapid load changes. Furthermore the time required for the generator to attain the requisite new load condition will be reduced.

Referring now to the drawing, 1 is a once-through vapor generator, the liquid receiving end of which communicates by means of a supply conduit 2 with a supply pump 3 driven by an electric motor 4. The pump 3 delivers the feed water from a conduit 5. The vapor produced by the generator 1 leaves the generator passage at 6 and enters a main steam conduit 7 leading to any steam consumption apparatus shown to be a steam turbine comprising a high pressure stage 8 and a low pressure stage 9, said turbine being provided in the embodiment shown for driving a dynamo 10. The waste steam from said low pressure stage 9 enters a conduit 11 and passes a condenser schematically shown at 12. The condensed steam flows through the conduit 13 into a reservoir 14. A pump 15 driven in any convenient manner is provided for delivering the liquid from said reservoir 14 into the feed water conduit 5 above referred to.

For relieving the generator 1 with respect to any load changes, a steam accumulator 16 of the well known type is provided, said accumulator containing liquid to be vaporized by means of the steam coming from the main conduit 7. To this end a steam charging conduit 17 branches off from the conduit 7 and leads to a steam deriver 18. A steam discharging conduit 19 communicates with the low pressure stage 9 of the steam consumption apparatus. In distinction from a communication of the conduit 19 with the high pressure stage 8 a greater pressure drop is available between the steam accumulator 16 and the consumption apparatus, so that the discharging capacity of the accumulator will be increased in comparison with the action of the discharging conduit 19 to the high pressure stage 8.

The charging conduit 17 and the discharging conduit 19 are each provided with a valve 20, 21, respectively. These valves are operatively connected—as shown in the drawing—so as to be inversely controlled. A piston rod 22 of a servo-motor 23 is linked to the connecting rods 24 for automatically controlling said two valves in response to the load variation velocity.

In the following the means for deriving a corresponding controlling impulse are dealt with singly.

In the embodiment shown, in the first instance a load impulse will be produced by means of a device shown in its entirety at A. This device comprises a bellows 25 acted upon by the same pressure as exists in the main conduit 7. For this purpose a pressure conduit 26 leads from the main conduit 7 to the bellows 25. The bellows 25 act upon one end of a lever 27 supported by an edge 28, at the other end of which a weight 29 is suspended for balancing the force exerted by the bellows. An arm 30 is secured to the lever 27 for transmitting the deflections of the lever 27 caused by the pressure variations in the conduit 26 on a well known jet pipe relay 31, so that the pressure produced in a controlling pressure conduit 32 varies in accordance with the pressure in the conduit 26 and hence with the load changes, it being understood that the pressure variations in the main conduit 7 are identical with the load changes.

For deriving a rate of change impulse from the load change impulse in the conduit 32 an additional device is provided shown as a whole at A. This device is fully explained in my previous patent 1,920,827 (reissued under 19,276) so that a further description does not seem necessary. According to this patent it follows that the pressure produced by the jet pipe 33 in the conduit 34 varies in accordance with the load variation velocity so that the pressure in the conduit last referred to represents a rate of change impulse.

A jet pipe relay D is operatively connected to the conduit 34 and provided for controlling the servo-motor 23. A jet pipe 35 of the relay D cooperates with two receiving nozzles, each of which communicates with a conduit 36, 37, respectively, leading to the servo-motor 23, as may be seen from the drawing.

The operation of the device described is as follows: Be it assumed that the load increases; the pressure in the main conduit 7 will then decrease so that the lever 27 of the device A will be rocked in an anticlockwise manner. Accordingly the jet pipe 31 will be likewise deflected in an anticlockwise manner thereby increasing the pressure in the conduit 32 in accordance with the load increase. The increased pressure in 32 thus produced acts upon the left side of the diaphragm 38 of the device B, whilst the pressure on its right side is a function of the velocity of the load change as more fully explained in my patent above referred to. Therefore, the jet pipe 33 varies the pressure in the conduit 34 in accordance with the increase in the rate of load change, so that by means of the relay D the servo-motor 23 closes the charging valve 20 and simultaneously opens the discharging valve 21 in dependence on the rate of load charge. Accordingly in case of a great rate of load change the two valves 20 and 21 will be more strongly influenced than in the case of a slight rate of load change.

In addition to the steam accumulator 16 a preheated liquid accumulator 39 is provided according to the embodiment shown in the drawing. This liquid accumulator is arranged to likewise relieve the generator in such a manner that upon a load increase the accumulated preheated liquid in 39 will be additionally supplied to the generator whilst upon a load decrease the surplus of preheated feed liquid will be stored in 39.

For preheating the feed liquid delivered by the pump 15 into the feed conduit 5, a preheater 40 is provided comprising a heat exchanging element 41 arranged in a casing or housing through which passes the steam coming from the medium pressure stage of the steam consumption apparatus. Accordingly the steam conduit 42 leading to the preheater 40 branches off from a conduit 43 leading from the high pressure stage 8 to the low pressure stage 9. The steam condensed in 40 flows through conduit 44 to the reservoir 14 above referred to. The preheated liquid leaving the preheater 40 flows through conduit 5 to the generator as long as the accumulator 39 remains inoperative. For accumulating the preheated liquid in 39 upon a load decrease, a conduit 45 branches off from the conduit 5 and communicates with 39. The conduit 45 comprises a check valve 46 for preventing a return flow from 39 through 45. A discharge conduit 47 communicates with conduit 5 via a valve 48 behind a valve 49 inserted in the conduit 5 between the conduit 45 and the discharge conduit 47. The two valves 48 and 49 are operatively connected to the piston 50 of a servo-motor 51 so as to be inversely con-

trolled in a similar manner as the valves **20** and **21** of the steam accumulator **16**. For controlling the servo-motor **51** another relay device C is provided and—similar to the device D—connected to the controlling pressure conduit **34** so that the servo-motor **51** controls valves **48** and **49** in dependence on the rate of load change in a manner similar to that according to which the servomotor **23** controls the valves **20** and **21**.

The preheated liquid accumulator **39** operates as follows: Upon a load increase the pressure in the main conduit **7** decreases so that, as described above, the controlling pressure in **34** varies in accordance with the rate of load increase. Therefore the jet pipe **52** of the relay device C deflects (like the jet pipe **35** of the relay device D) in a clockwise manner so that the piston **50** of the servo-motor **51** will be displaced to the left, thus closing the valve **49** and simultaneously opening the valve **48**. In this way the preheated liquid in **39** flows through the discharge conduit **47** into the feed conduit **5** to the pump **3** delivering the liquid into the generator. At the same time the closing of the valve **49** results in a reduction of the liquid supply through the preheater **40** so that the amount of preheating steam is correspondingly reduced and a greater amount of steam enters the low pressure stage **9**. If, however, the generator load decreases, the piston **50** of the servo-motor **51** will be displaced to the right thus causing the opening of the valve **49** and simultaneously the closing of valve **48**. In this case the liquid delivered by the pump **15** flows through the valve **49** as well as into the accumulator **39**. Due to the reduced load the generator receives only a reduced amount of feed liquid so that a considerable part of the liquid delivered by the pump **15** enters the accumulator **39**, the discharge of which is reduced or stopped. Under these circumstances the preheater **40** receives a greater amount of preheating steam coming from the steam consumption apparatus, i. e. the surplus not consumed by said apparatus due to the load decrease.

It is to be noted that, in distinction from the embodiment shown, only one of the two accumulators **16** and **39** may be provided. Furthermore it should be possible to modify the embodiment shown in such a manner that the two accumulators do not operate simultaneously but in series.

In some cases it may be desirable to control the accumulators in response to the rate of load change in such a manner that the generator will only be relieved when the rate of load change exceeds a predetermined value. This value depends on the generator characteristic determining the range of the rate of load change within which the generator does not require any relief by means of any accumulator. As mentioned above, a once-through vapor generator as shown in the drawing may follow a rate of load change of within 10% per minute. With this in view, the invention aims at providing auxiliary means for rendering inoperative the controlling system within said predetermined value whereby said accumulators merely relieve the generator upon a load change exceeding said value.

In the embodiment shown, a receiving nozzle **53** may for this purpose be transversely displaced in any suitable manner in order to vary the controlling pressure in the conduit **34** in response to the position of the jet pipe **33**. In this manner it may be achieved that the pressure in **34** does not vary upon slight deflections of the jet pipe **33** corresponding to slight rate of load changes. In this way the accumulators do not become effective in response to all load changes and thus comparatively slight stored up energies suffice for the desired relief of the generator.

As may be seen from the drawing, the position of the receiving nozzle **53** may be adjusted at will so that the controlling system may be easily adapted to the working condition of the entire plant.

The accumulators may be controlled in response to the rate of load change as well as to the load change per se. The inventive principle consists merely therein that the accumulators in all events operate in response to the rate of load change. The manner in which the rate of load change impulse is derived is immaterial. Therefore the device B may be replaced by any other convenient means. Thus for instance a gyroscope might be used whose axis of rotation would be displaced in accordance with the load change impulse per se in such a manner that the rate of load change impulse could be obtained from the gyroscope precession moment.

For the sake of completeness it may be further submitted that any load change impulse for controlling the plant may be derived from the controlling pressure conduit **32**. For instance a servo-motor **54** for controlling the electric motor **4** driving the pump **3** in response to the load change may be connected to the conduit **32**.

While I have described and illustrated my invention by a special embodiment shown in the drawing, it will be readily understood by those skilled in the art that the description is not to be taken in a limiting sense, many modifications of the embodiment shown—apart from those mentioned above—being possible within the scope of my invention. Moreover it is not indispensable that all the features of my invention be used jointly since they may be employed advantageously in various combinations and subcombinations.

GUIDO WÜNSCH.

PUBLISHED

MAY 11, 1943.

BY A. P. C.

G. WÜNSCH

REGULATING DEVICE FOR STEAM GENERATORS

Filed March 28, 1940

Serial No. 326,527

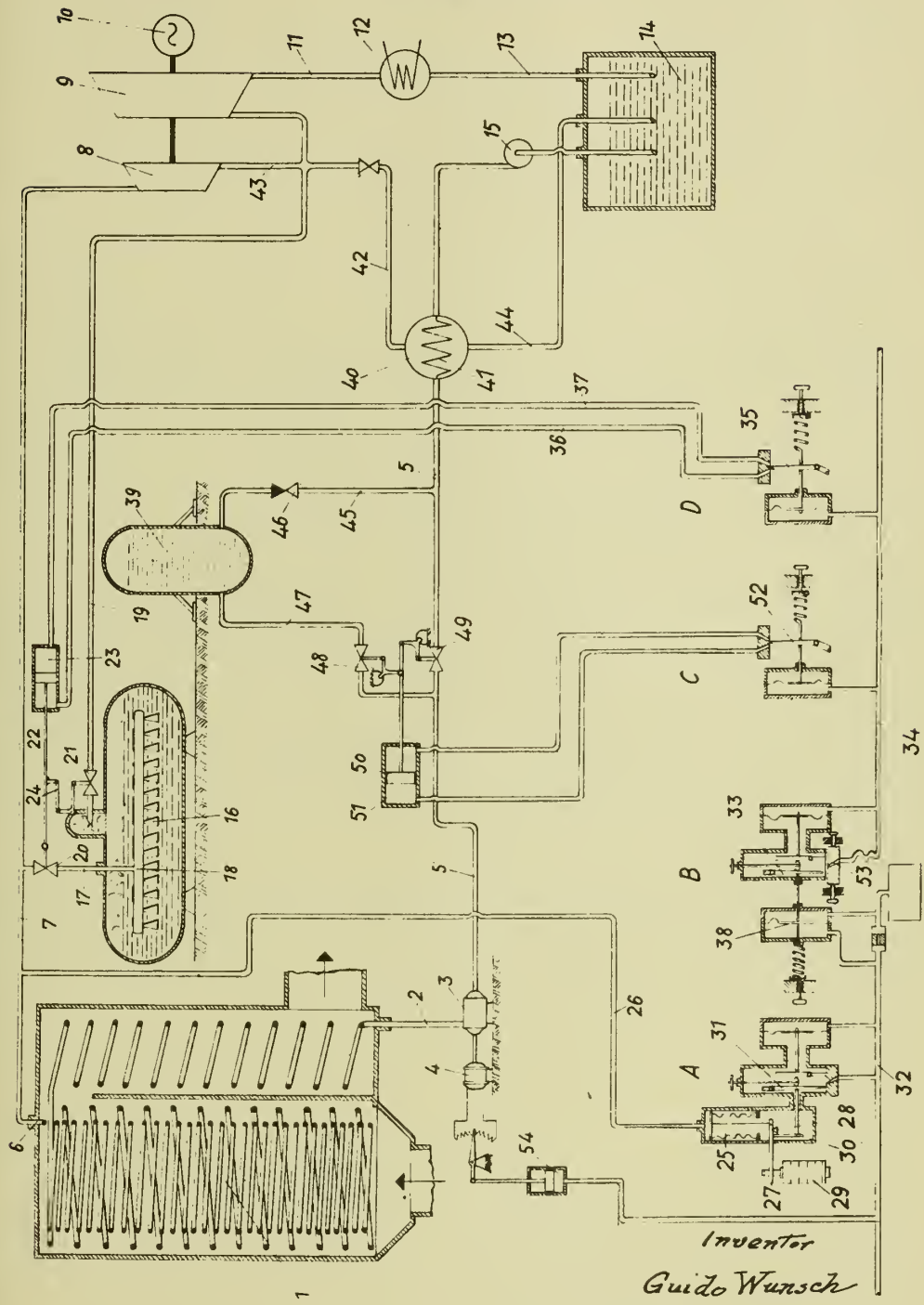

Inventor

Guido Wunsch

By A. D. Adams

Attorney

Published May 11, 1943

Serial No. 326,537

ALIEN PROPERTY CUSTODIAN

PRODUCTION OF SOFT RUBBER-LIKE TUBES, PLATES, RODS ETC. OUT OF POLYVINYL CHLORIDES

Josef Vonbank, Burghausen, Upper Bavaria, Germany; vested in the Alien Property Custodian

No Drawing. Application March 28, 1940

How to make tubes, plates rods etc. out of polyvinyl chlorides with the addition of softeners, with or without loading, is already known. The softness and elasticity of these tubes etc. can be regulated and extensively changed according to the amount of softener used.

Surprisingly, it has now been found that the degree of elasticity can be considerably heightened when the softener containing tubes, plates, rods etc. are dipped in cresol, phenol or nitrobenzene for a short time.

Example 1

50 parts high polymeric polyvinyl chloride and 50 parts tricresyl phosphate are mixed in a coil and spattered into tubes in a tube-spatter machine at a temperature of 120–150° C. The tubes are then soaked in nitrobenzene for 12 hours and afterwards washed off in hot water. Through this procedure they become extensively rubber-like.

Example 2

A polyvinyl chloride tube as in Example 1 is soaked in acetone until it becomes soft, dried, and then soaked in nitrobenzene for ½ an hour and then washed in hot water for a short time. An altogether rubber-like tube is also gained in this manner.

Example 3

If one proceeds as in Example 2 but soaks the tube in cresol or phenol instead of nitrobenzene one arrives at the same result.

JOSEF VONBANK.

Published May 11, 1943

Serial No. 326,790

ALIEN PROPERTY CUSTODIAN

PROCESS AND DEVICE FOR THE UTILISATION OF THE WIND ENERGY BY MEANS OF DIRECT HEAT TRANSFORMATION

Alessandro Beldimano, Rome, Italy; vested in the Alien Property Custodian

Application filed March 29, 1940

The present invention relates to a process and device for the utilisation of the wind energy by means of direct heat transformation.

It is well known that any energy whatever and particularly mechanical energy may be directly transformed into heat with a very high efficiency, theoretically reaching the 100%. In order to obtain heat from mechanical energy, generally, as known, the phenomenon has to be resorted to the friction between solid bodies or between solid and fluid bodies.

Heat being the least valuable form of energy generally the transformation is avoided of the mechanical into thermic energy and the direct utilisation of the motion is preferred or its transformation, for instance, into electric energy.

On the contrary in the case of wind, directly providing mechanical energy, the transformation has been found convenient, according to the present invention, of said energy into heat, then to accumulate the same in order to furnish it for heating purposes or the transformation into pressure potential energy or into mechanical or electric energy and the like by using convenient means already known or to be devised, capable of transforming heat into a higher form of energy.

According to the present invention the transformation is furthermore suggested of the mechanical into thermic energy by means of a brake of the type comprising a rotor cooperating with a fixed friction body radially and/or axially pressed against the same rotor, or of the type comprising a blade or bowl wheel operating within a fluid (liquid or gaseous) contained in a convenient envelope. To this object an hydraulic brake of the known Froude type may be very well adapted.

Always according to the present invention the fluid heated by the brake mentioned and thus brought to a high temperature is circulated through a thermic accumulator, wherefrom the heat is subtracted at right time and in the quantity wanted by means, for instance, of a second auxiliary fluid. The action of the brake on said rotor may be made automatically proportional to the wind speed.

Peculiarly advantageous is the present invention when employed in those installations where the wind energy is collected by means of a certain number of helical flaps or wheels placed more or less distant one from the other and in which the energy of the single flaps is wanted to be collected. The invention allows the transformation of the mechanical energy of each flap in the immediate proximity of the flap, into thermic energy, this requiring extremely simple means of construction, heat being then conveyed from the single generators to a central point of accumulation.

The invention is illustrated in the accompanying drawing showing a preferred form of realisation. In the drawing:

Fig. 1 shows a longitudinal section through the hydraulic brake of the type mentioned;

Fig. 2 shows the same brake in a cross section. Reference number **1** is the axle of the brake kept in motion by means of one or several blade wheels (said wheels might also have helical blades). On said axle two or more blades **2** are fixed turning with the axle in the direction of the arrow or on the contrary. This rotation takes place in a drum-like chamber **3** filled with oil or other liquid. To prevent the liquid from rotating there are provided within said drum two or more fixed walls **4** possessing openings a little larger than the turning blades **2**. When the axle **1** turns, the passage of the blades **2** produces through the openings in the walls **4** a severe shaking mixing of the oil.

Practical trials have led to the result that with a relatively small machine remarkable quantities of mechanical energy may be transformed into heat. The axle **1** is made to pass, on only one side, through a stuffing box **5** and turns on the other side within a usual bearing **6** without packing. As the oil within the drum **3** is expanded, when heated, the bearing **6** communicates through the tube **7** with the expansion receptacle **8**. According to the heat reached the level of the liquid **9** reaches a greater or smaller height in the receptacle **8**. The drum **3** is surrounded by a water chamber **10**, where the water is admitted in **11** and discharged in **12** according to the direction of the arrow. This water, eventually also another liquid, exclusively serves for withdrawing the heat produced and conveying it to the place of utilisation. Of course the water chamber **10** may surround also on the sides the oil chamber **3**. The water chamber **10** might also be abandoned, the liquid flowing then directly through the drum **3**, to be directly utilised by heat carriers for withdrawing the same heat.

In the example of realisation illustrated the whole brake is furthermore surrounded by an envelope **13** allowing to lodge in the interval **14** an insulating means, to thus reduce the losses of heat to a minimum. The tube **15** still serves for pouring oil or another liquid into the drum **3**.

The quantity of heat generated depends on the

wind speed and on the consequent speed of rotation of the blade wheels. The quantity of heat generated increases, thus, approximately, with the third power of the speed of the blades' rotation. In this fact there resides a peculiar advantage of the present invention, being it possible, consequently even with a great intensity of wind to obtain with the help of simple devices of small size, the transformation of the wind energy into heat energy.

The hydraulic brake may have any known conformation whatever. In general a rotor is provided operating in the liquid together with fixed surfaces, or moveable, disturbing the movement of the oil accelerated by the motor and generating consequently the greatest possible quantity of liquid friction.

It may be advisable to guide the heat transmitting liquid successively through several hydraulic brakes, in order to collect the heat of these devices and gradually reach the most elevated possible temperatures.

Of course other devices may logically be used together with the object of the present invention for instance joints or couplings between the blade wheels and the conduit of the shaft 1 preventing the heat from being conveyed from the interior chamber 3 of the hydraulic brakes towards the outside through the conduit of the shaft.

The present invention has been illustrated and described in a preferred form of realisation but it is clear that constructive changes may be practically introduced therein without surpassing the limits of protection of the present industrial patent.

ALESSANDRO BELDIMANO.

PUBLISHED

MAY 11, 1943.

BY A. P. C.

A. BELDIMANO

PROCESS AND DEVICE FOR THE UTILISATION OF THE WIND ENERGY BY MEANS OF DIRECT HEAT TRANSFORMATION

Filed March 29, 1940

Serial No. 326,790

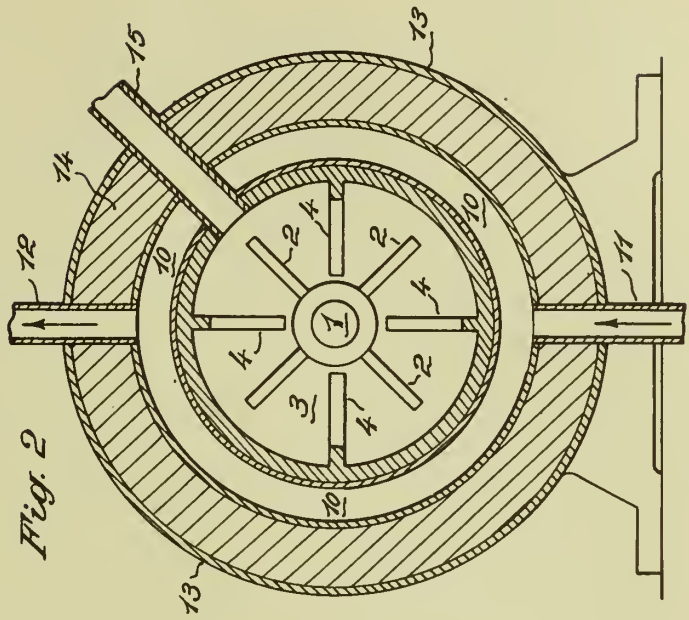

Fig. 2

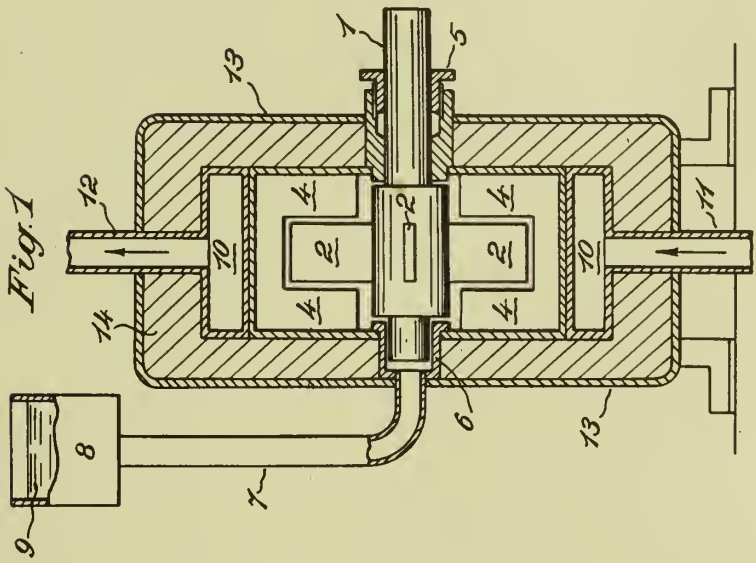

Fig. 1

Inventor,
A. Beldimano

By: Glascock Downing & Seebold
Attys.

Published May 11, 1943

Serial No. 327,474

ALIEN PROPERTY CUSTODIAN

SOUND AND HEAT INSULATION

Hugo Stössel, Berlin-Lichterfelde-West, Germany; vested in the Alien Property Custodian

Application filed April 2, 1940

My invention relates to improvements in a method and an apparatus for producing a sound absorbing and the heat badly conducting layer on a surface to be insulated.

In providing of structures for absorbing the sound the technics is confronted with the problem of producing materials presenting a large surface such it is realized in the clothes or woven materials from which our dresses consist. Experience made in former times has proved that such materials consisting of fine fibres and enclosing air spaces are suitable in a particularly high degree to absorb the sound. The technics is confronted with a similar problem which is engaged in the insulating against losses of heat. Herewith it depends upon finding a material which in itself badly conducts the heat and which is so composed that it encloses a great number of air spaces.

According to the present invention the said problem is solved in the following manner:

As basis mineral wool especially slag wool is used. Such material is produced in great quantities in metallurgical works especially in blast furnace plants. Mineral wool or slag wool is a material which badly conducts the heat and which is dissipated in its structure into a very great number of fine and short fibres. The said material is used in the technics in the most cases in form of pressed plates of a substantial size in order to cover therewith one side of walls or the like or to fill therewith the intermediate space between two walls, if a sound-damping or heat insulating effect is needed.

This problem is answered according to the present invention in such a manner that the material is spread or scattered upon the surface or wall to be insulated in a similar way as nowadays mixtures of lime, sand and water (mortar) are spread upon the walls in order to produce a coat of plastering.

According to the present invention the material is at first subjected to a process of loosening or opening for the reason that the said material is commercially delivered in more or less packed or agglomerated lumps which in such state cannot be used. The said loosening is effected e. g. in such a manner that the material is delivered into a receiving hopper from which it drops into a room in which it is fed by means of a conveying screw into the loosening or opening chamber.

In the said loosening chamber the loosening or opening of the mineral wool or slag wool is effected in a suitable manner by the combined action of mechanical means such as e. g. an agitator or an opener and pneumatic means, such as e. g. a current of air under pressure. The loosened or opened material is then moistened or mixed with the liquid binding substance, as e. g. water-glass; preferably only moderate proportions thereof being used. The material so treated is then applied to the surface or wall to be covered for protection against passing of sound and/or heat.

After applying the layer of material to a surface or wall the layer may be smoothed and equalised, if desired, e. g. by a mason's hand-float or similar instrument and a moderate mechanical pressure may be exerted on the layer for slightly compressing the fibres of the slag wool to form a more compact layer but still enclosing a great number of small air spaces distributed throughout the layer.

The expressions "surface" and "wall" include surfaces of any type of structure or parts thereof to be insulated against sound or heat or both. So the expression "surface" or "wall" are intended especially to comprise walls, floors, fundaments, roofings, ceilings of buildings, furnaces, fire-boxes, boilers, pipes, ice boxes, parts and housings of refrigerating apparatus etc.

My invention relates also to a device by which fibrous materials, especially mineral wool or slag wool, may be treated in the above described manner and spread upon the wall to be covered.

An example of such apparatus is shown in the enclosed drawing wherein

Fig. 1 is a front elevation of the said apparatus partly in section,

Fig. 2 is a sectional elevation of the nozzle or mouth piece of the apparatus in an enlarged scale.

Referring more particularly to the drawing *a* indicates the receiving hopper for the slag wool or the like from which such fibrous material drops by its gravity into a room or chamber in which a shaft c is rotatably mounted carrying a conveying screw *d*. The shaft *c* is mounted in the partitions *e* and *f* of the housing and is driven by any suitable means, e. g. a toothed gear *g* from a motor (not shown). The shaft *c* carries adjacent to the conveying screw a plurality of radial bars *s* which rotate together with the said shaft. In the intermediate spaces between the said bars *s* there are arranged on the inner peripherical face of the said cylinder a plurality of bars *h*. The material is pressed by the conveying screw *d* into the part of the chamber containing the set of the bars and is thereby broken

up and loosened. Near the delivering end of the conveying screw *d* and the beginning of the set of the bars there is arranged at *i* a lateral pipe through which the gaseous means or air under pressure can enter. The material is exposed to the combined action of the agitator or opener and of the stream of air under pressure and thereby a sufficient opening or loosening of the material is effected, so that it can pass through the openings *k* in the partition *f* skirting the chamber *b* on the side remote from the conveying screw. Under the forwardly pressing action of the said conveying screw and of the stream of air under pressure the opened or loosened fibrous material passes through the space *m* from which it enters into the flexible tube *n* which supplies it to the spreading pistol or nozzle o. This nozzle comprises a cylindrical portion and a tapered orifice *v* (Fig. 2). In the said cylindrical portion there are arranged rings *p* having holes *r* to which a liquid binder as e. g. waterglass is supplied from the exterior through the conduit *q*. This liquid binder is sprayed through fine holes *r* into the interior of the nozzle and hereby moistens the entering slag wool or the like. This moistened slag wool is then carried away by the streaming air under pressure through the nozzle *v*, is thrown out therefrom and impinges against the surface or wall upon which it is desired to apply the sound-damping or heat insulating layer or mat.

It has been already proposed to provide devices and methods by means of which it is possible to spread pulverous and granular materials after a preceding moistening. For instance, for the production of a coat of plastering upon a wall, one may spread or jet a mixture of lime, sand and water (mortar) or a mixture of cement and water and also a mixture of cement, sand and water (concrete) in the indicated manner.

In this way adapted for plastic or mortar-like materials and mixtures it was, however, not possible to apply fibrous material such as mineral wool or slag wool upon a wall or the like in such a manner that a highly efficient mat, coating or layer adapted to absorb the sound and to prevent heat conducting is obtained. Therefore, it was necessary to build up either big walls or big ceilings which are very expensive for the ordinary use. Further it has been proposed to come to the same result on a cheaper way by arranging several walls or ceilings side by side and to fill the intermediate spaces between the said structural parts with sound-damping mats. The effect of these sound-damping mats depends substantially on the absorption of the sound and this absorption is depending on the size of the presented surface of the absorbing material. The surface, however, increases with the subdivision of the material.

The sound insulating and heat insulating layers according to the present method have an extraordinarily high insulating effect as well against sound diversion as against heat diversion and the production of these highly efficient layers is obtained with a small amount of labor.

HUGO STÖSSEL.

PUBLISHED
MAY 11, 1943.
BY A. P. C.

H. STÖSSEL
SOUND AND HEAT INSULATION
Filed April 2, 1940

Serial No.
327,474

Fig. 1

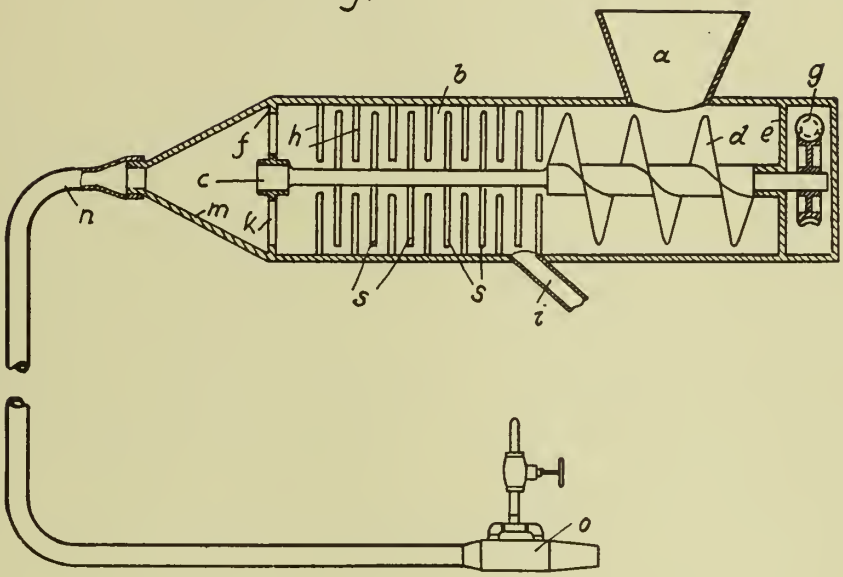

Fig. 2

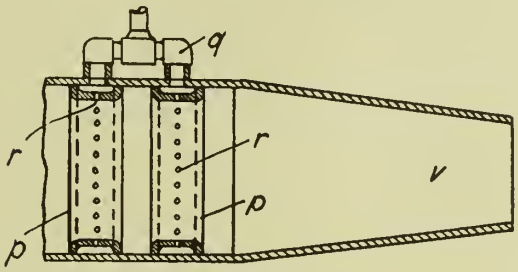

Inventor:
Hugo Stössel

Published May 11, 1943

Serial No. 331,044

ALIEN PROPERTY CUSTODIAN

METHOD AND APPARATUS FOR THE UNIFORM TREATING OF CURVE-LIKE EXTENDING EDGES OR FACES OF WORKPIECES

Walter Hugo Dittrich, Burgstadt, Germany; vested in the Alien Property Custodian

Application filed April 22, 1940

The invention relates to a method for the uniform treatment of curve-like extending edges or faces of workpieces, especially for quilting edge seams on parts of fabric. The method may be applied with similar success also for the folding in or doubling down of the edges of parts of fabric and also for the most treating methods in the iron and metal treating industry especially for milling or also for the autogenous fusing cutting of pieces of metal and sheet metal.

According to the invention the workpieces are fixed on the circumference of a rotary table in uniform radial-symmetrical arrangement. The machine or apparatus, such as a sewing machine, folding in and doubling down device, miller, autogenous cutting device or the like, on the one hand, and the rotary table on the other hand carry out a radial to and fro movement corresponding to the shape to be treated, whereas at the same time by corresponding gears a changing angular speed is imparted to the rotary table said speed adapted to the actual shape so that the workpiece is moved at uniform speed along the edge to be treated.

It is advantageous, to arrange the workpieces, for instance cut pieces of fabric, paper or cardboard or the sheet metal plates, on the circumference of the rotary tube so that the inner edges form at the same time the sides of regular polygons, especially of a regular hexagon, these sides touching at every corner of the polygon so that the end of the preceding workpieces bears against the beginning of the next following piece.

The invention relates further to an apparatus for carrying out this method. According to the invention the workpiece carrier is rotated through the intermediary of a stepless regulatable gear, the ratio of gear of which is regulated according to the extension of the curve of the edge or face of the workpieces to be treated.

The workpiece carrier is preferably driven through the intermediary of a differential gear one element of which is driving with a rotary speed regulated according to the shape of the workpiece or of the workpieces. At this rotation it is necessary to compensate a retardation due to the shape of the workpiece, when the workpiece is passing through certain points, by corresponding acceleration, so that at the beginning of the next following workpiece to be treated the corresponding element of the gear is again at the same point relative to the stationary machine frame.

It is advisable that the curved disc for the gear as well as the curved disc for the control of the mutual shifting of workpiece carrier and treating device are arranged coaxially, united to a common rotary body and therefore driven at the same time and at such high number of revolutions that this rotary body during the working of every single workpiece carries out a complete revolution. The curve-discs may also be arranged coaxially to the workpiece carrier.

A spatially better form of construction is obtained, when the differential gear for the driving of the workpiece carrier is constructed as a planet gear, the sun wheel of which is rotated at uniform speed and the planet carrier of which is moved to and fro at a rotary speed regulated according to the shape of the curve.

The mutual shifting of the carrier and of the working device can be effected suitably also from one and the same curved disc. It is immaterial, whether the radial shifting is imparted to the workpiece carrier or to the workpiece.

When the device according to the invention is employed for quilting by means of a sewing machine, a serious progress compared with handwork consists therein that, when the direction of the seam is altered, it is not necessary to turn the workpiece relative to the sewing machine in order to obtain the desired sewing direction, but it is sufficient to move the sewing machine parallel to itself in order to carry out seams transversely to the otherwise usual sewing direction. The supposition therefore is however, that the feeding of the fabric is not effected by the commonly used sewing machine transporter but by the device according to the invention.

The invention relates further to a clamping device composed of a cover pressed by clamping means against a bottom part and serving especially for the holding of ready cut parts of fabric, paper and the like and especially for holding at the quilting of cut parts of fabric by means of edge seams. The bottom part having a plane lower surface increases in thickness from the edge towards the middle, the cover plate having a corresponding hollow shape.

With the object to correctly form loops during the sewing proceeding, it is necessary that the clamped fabric parts clamped by the workpiece carrier are held at less great distance above the stitching plate of the sewing machine, this requiring that the workpiece holder has a thin wall. On the other hand the cut fabric parts must be clamped under pressure, this being not possible in consideration of the bending when the support is thin, so that the support which is thin at the edge gets thicker towards the rear wedge-like so

that it can take up perfectly the bending movements occurring at the clamping.

In order to securely avoid shifting of the fabric parts, it is advisable to provide on the lower part a groove extending along the edge, by which the wall thickness is reduced suddenly to a smallest measure remaining the same up to the edge. The cover is then equipped with a rib-like projection which may be serrated and project into the groove.

Two embodiments of the invention are illustrated in the accompanying drawing, one for quilting the edge seams for cut fabric parts and the other on an apparatus for fusing cutting workpieces of metal and iron.

Fig. 1 shows a vertical section through the machine,

Fig. 2 is a top plan view of the machine,

Fig. 3 shows two holding devices for the fabric parts in perspective view, the covers being closed,

Fig. 4 in perspective view a holding device, the cover being removed,

Fig. 5 a section on line V—V of Fig. 4 showing a holding device with the cover,

Fig. 6 a section on line VI—VI of Fig. 2,

Fig. 7 an axial section through a machine of modified construction and destined for fusing cutting of sheet metal parts.

The driving engine **2** is mounted in the machine frame **1** on an intermediate carrier **1***a* and drives, by means of a belt **2***a*, a shaft **3** journalled in the machine frame in three bearings **3***a*, **3***b*, and **3**c. An intermediate shaft **6**, journalled in the machine frame on the upper plate **1***b*, is driven from shaft **3** by means of bevel wheels **4**, **5**, and a control body **8** with external teeth **8***a* is driven at uniform speed from the intermediate shaft **6** by means of a pinion **7**. The control body **8** is rotatably mounted on a hollow pin **9** arranged on the top plate **1***b* of the machine frame **1** and has a curved slot **10** in its upper end face and a curved slot **11** in its lower end face.

An intermediate shaft **14**, journalled in the central bore of the hollow pin **9**, is driven from shaft **3** by means of bevel wheels **12**, **13** and drives by means of bevel wheels **15**, **16** a rocking shaft **17**. This rocking shaft **17** is journalled in a carrier oscillatable about the hollow pin **9** or about the intermediate shaft **14** and drives by means of bevel wheels **19**, **20** a pinion **21** mounted in the carrier **18**. This pinion **21** meshes in corresponding internal teeth **21***a* of a ring **22**, the latter being rotatably mounted on a cylindrical flange **1**c projecting from the top plate **1***b* of the machine frame, and carries the holding devices for the turn-down collars to be quilted.

One end of a link **23** acts on the carrier **18**, the other end of the link being hingedly mounted, by means of a pin **23***a*, on one arm of a double lever **24**. This double lever **24** is oscillatably mounted on a pin **25** fixed on a socket **1***d* of the machine frame **1**, as shown in Fig. 6. The pin **25** projects into the space between ring **22** and control body **8** and above this space. On the second arm of the double lever **24** a roller **26** is fixed which projects into the curved slot **10** of the control body **8**.

The sewing machine **29** is driven from shaft **3** by means of a belt **27***a* and belt pulleys **27**, **28**, the sewing machine being shiftable on the machine frame **1** in sliding guides radial to the rotary table. A connecting rod **30** is fixed on the sewing machine **29** and carries at its free end a roller **31** which projects into the lower curved slot **11** of the control body **8**. A fork **32** of the connecting rod **30** engages in a corresponding annular groove of hub **33** of the belt pulley **27**, this belt pulley being shiftable on shaft **3** by groove and key **33** but is rotated with this shaft.

The holding devices **34** for holding the cut fabric pieces are indicated in Figures 1 and 2 only by their contours, in order not to obscure the illustration. The details of these holding devices are shown in Figs. 3 to 5 and will be hereinafter described.

The operation of the machine is as follows:

By the connecting rod **30**, the roller **31** of which engages in the curved slot **11** of the control body **8**, the sewing machine **29** is continually shifted in radial direction at the rotation of the ring **22** carrying the holding devices **34** for the cut pieces of fabric, so that the sewing needle is always directly at the side of the edge of the holding device **34** actually in the operative position. At the same time during the rotation of ring **22** a reciprocating rocking movement is imparted, by means of the link actuated by the double lever **24**, to the pinion **21** on carrier **13**, said pinion meshing with the internal teeth of ring **22**.

As the bevel wheel **15** is the sun wheel of the planet gear, a rotary movement is imparted to the workpiece carrier **22** by the rocking movement of the carrier **18** of the circulating wheel, which carrier carries the pinion **21** and represents a planet carrier, this rotary movement varying as regards angular speed and is either accelerated or retarded relative to the uniform rotary movement of the control body **8**. Direction and amplitude of this variable rotary movement are determined by the shape of the curved slot **10** of the control body **8**. This shape is carried out according to the shape of the cut pieces of fabric to be quilted, so that, when the sewing machine moves from **34***a* to point **34***b*, as shown in Fig. 2, owing to the rotation of the rotary table and the to and fro movement of the sewing machine the workpiece holder carries out a rotation at lower angular speed than when the sewing machine moves from point **34***b* to the point **34**c and the rotary body moving again at lower angular speed along the distance **34**c to **34***d*, supposed that the sewing machine itself rotates at constant number of revolutions, so that the sewing needle carries out uniform movements during the passing over the distances **34***a*, **34***b*, **34**c and **34***d*.

The acceleration of the angular speed of the work-piece holder will occur in accordance with the construction of the gear when the rocking arm **18** moves in the direction of the rotating movement of the control body **8**. A retardation of this turning movement will occur, however, when the rocking arm is moved in a direction opposite to the direction of rotation of the workpiece holder.

If the rocking arm at the beginning of the work on every fresh workpiece has to assume the same position, the control curve must be closed and a movement of the rocking arm due to the retardation must be compensated again by subsequent acceleration.

It may further be mentioned that standstill of the workpiece holder is obtained, when the oscillatable arm is oscillated at a speed of similar amplitude but in opposite direction to that in which the control body **8** rotates, and that even a backward movement of the workpiece holder can be obtained when the rocking arm **18** is oscillated more rapidly than the control body **8** rotates at normal rotating speed.

From the fact, that the control body **8** in the

machine described carries out a complete rotation, whereas the ring **22**, which carries the cut pieces of fabric to be quilted moves through the sixth part of a revolution, favorable control conditions result for the curved slots **10** and **11** of the control body **8**, so that the controlled elements are moved with the greatest possible accuracy.

For clamping-in fabric parts to be worked for instance to neck bands of shirts the holding devices shown in Figs. 3 to 5 serve. Each holding device comprises a sector **35**, which is fixed on the ring **22** or made in one piece with the same, and it is further equipped with a flange-like bent off horizontal extension **36** the front part of which is of such shape that an approximately flat pyramid-shaped lower part **37** is produced. The outer shape of this lower part **37** is adapted to the shape of the neck-bands which have to be made and has a wall thickness increasing from the edge towards the middle, as shown in Fig. 5, so that the pyramid shape mentioned results, whereas the lower surface is plane.

A groove **38** is provided in the edge of the lower part **37** by which groove the wall thickness of the lower part is suddenly reduced to a minimum remaining uniform up to the edge. The cover **39** to be placed on the lower part **37** has a hollow shape corresponding to the shape of the lower part **37** and a lip-like projection **40** projecting into the groove **38** of the lower part **37**, as shown in Fig. 5. The hinge elements **41** of cover **39** engage in corresponding recesses **42** of flange **36**, so that the cover can be folded up about the pins of the hinge elements **41**. For pressing the cover **39** on to the lower part **37** two pairs of clamping levers **43** are arranged on each sector **35** and oscillatable about vertical pins **43***a*, which levers can be made to engage with inclined faces **44** on the cover **39**, so that this cover is securely pressed on to the lower part **37** by wedge effect.

For inserting the cut pieces of fabric the clamping levers **43** are turned back into position, shown in Fig. 4. The cover **39** is then folded up and the cut pieces of fabric are inserted. When the cover **39** is folded down, the cut pieces of fabric are pressed by rib **40** on the cover into the groove **38** of the lower part **37** and thus particularly securely held on the edge. After folding down the cover **39** this cover is pressed on to the lower part **37** by oscillating the clamping levers **43**. The cut pieces of fabric are then securely held in the holding device.

The groove **38** in the lower part **37** and the corresponding lip-like rib **40** of the cover **39** perfectly fulfil their object, when the depth of the groove and the height of rib **40** are only about ½ mm. This measure is shown greater in order to particularly clearly illustrate the effect when clamping the cut pieces of fabric. When the groove **38** and the rib **40** are of correct dimensions, distortion of the cut pieces of fabric cannot take place.

In Fig. 7 an apparatus for fusing cutting of sheet metal parts is illustrated. Material elements of this machine are constructed according to the elements of the machine above described, with the difference however that a fusing burner is provided instead of the sewing machine, the feed tubes **58** of the fusing burner being constructed to serve at the same time as carrier for the cutting nozzle and so that it is shiftable horizontally and in direction of the diameter of the rotatable plate in two guide bearings **59** and **60**. The bearings **59** and **60** are fixed on the machine frame **1**. The control body **8** carries, as in the form of construction above described, two curved discs or stencils **10***a* and **11***a* in which the curved disc **10***a* is however at the bottom and the curved disc **11***a* on the top. The position of the corresponding grooves or slots are also accordingly interchanged, so that the groove **10** is at the bottom and groove **11** at the top. As shown in Fig. 7, the planet gear is consequently arranged below the curved discs, this presenting the advantage that the gear is located oil-tight and dirt-tight in the inner casing of the machine frame. In the form of construction illustrated the planet gear is further simplified in that one of the shafts is omitted. A bevel pinion **50** on the horizontal shaft **17** meshes directly with the teeth **51** of a bevel wheel fixed on a cylinder flange **52**, and carries the workpiece holders **63** in which the workpieces **64** are held by clamping devices.

As for the fusing cutting an additional control of the gas supply is necessary, in order to first pre-heat the fresh workpiece at the beginning of a fresh cutting, control cams **57** are mounted on the upper stencil **11***a* and act, when they are turned, upon a lever of a gas cock **56** mounted in the gas pipe **58**. The cock, when liberated by the cams **57**, is automatically returned into the initial position by the action of a spring **56***a*.

WALTER HUGO DITTRICH.

PUBLISHED

MAY 11, 1943.

BY A. P. C.

W. H. DITTRICH

METHOD AND APPARATUS FOR THE UNIFORM TREATING OF CURVE-LIKE EXTENDING EDGES OR FACES OF WORKPIECES

Filed April 22, 1940

Serial No. 331,044

2 Sheets-Sheet 1

Fig. 1

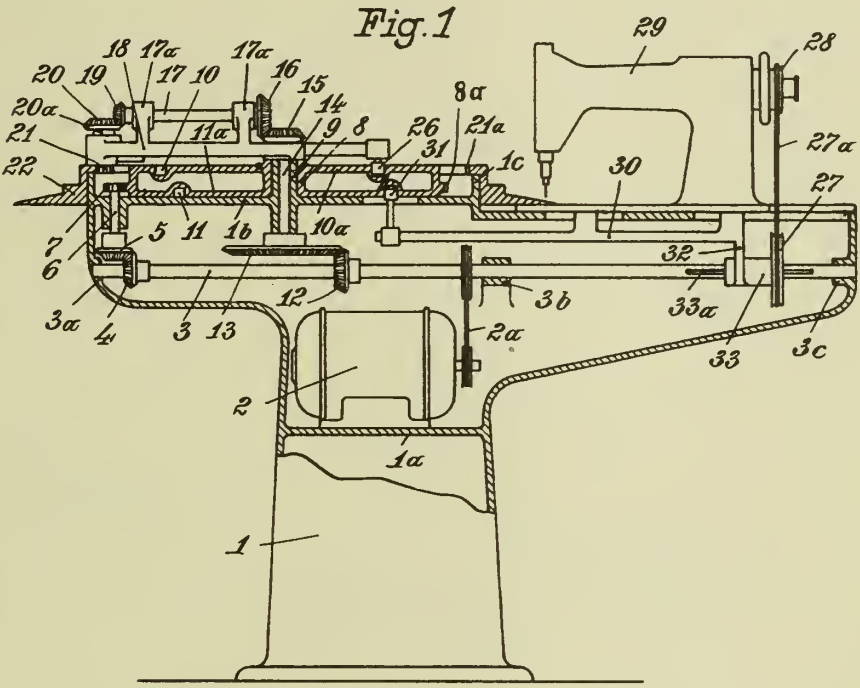

Fig. 2

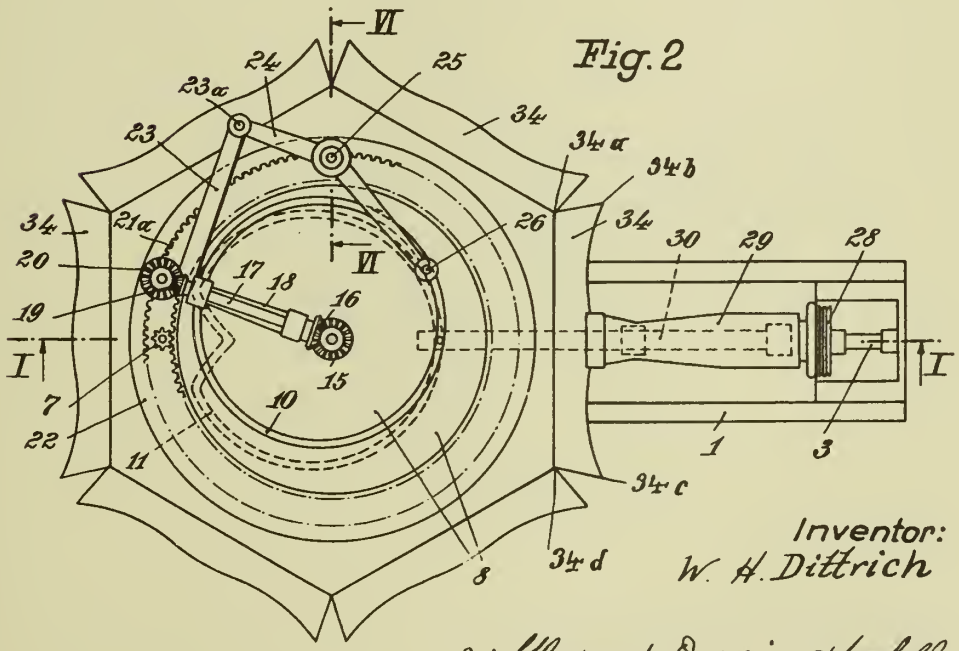

Inventor:
W. H. Dittrich

By: Glascock Downing & Seebold
Attys.

PUBLISHED

MAY 11, 1943.

BY A. P. C.

W. H. DITTRICH

METHOD AND APPARATUS FOR THE UNIFORM TREATING OF CURVE-LIKE EXTENDING EDGES OR FACES OF WORKPIECES

Filed April 22, 1940

Serial No. 331,044

2 Sheets-Sheet 2

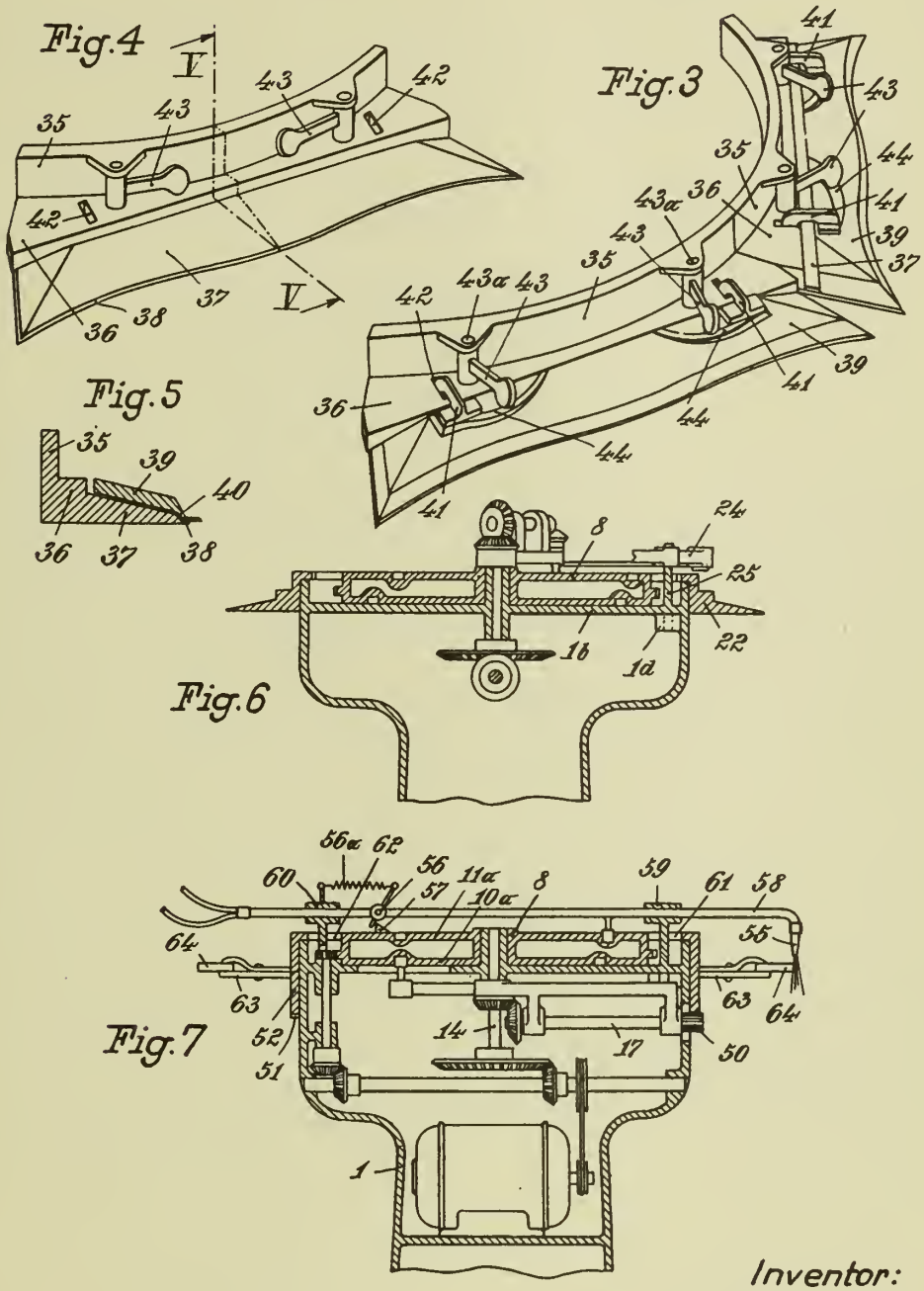

Inventor:

W. H. Dittrich

By: G. P. Scott & Downing & Seebold

Attys.

Published May 11, 1943

Serial No. 330,156

ALIEN PROPERTY CUSTODIAN

ARTICLES IN WHICH CONSTANT AND STABLE PERMEABILITY VALUES ARE REQUIRED, AS FOR INSTANCE PUPIN COILS, KRARUP CONDUCTORS, ETC.

Hermann Fahlenbrach, Essen-Steele, Germany; vested in the Alien Property Custodian

No Drawing. Application filed April 17, 1940

In telephone and telegraph engineering, for instance in the construction of Pupin coils and Krarup conductors, magnetic materials possessing constant and stable permeability values are used. These materials, technically known as "Isoperm" alloys, are at present manufactured almost exclusively from the two fundamental constituents iron and nickel, to which other elements, such as copper, aluminum, and titanium can be added. Such iron-nickel alloys do not exhibit the "Isoperm" properties, e. g. stable and constant initial permeability and low remanence values, until they have undergone certain rolling operations and heat treatments.

According to the invention, the above mentioned "Isoperm" properties can also be obtained in alloys which do not contain any nickel but consist mainly of iron and chromium, to which aluminum, silicon, manganese, molybdenum, tungsten, titanium, and vanadium can be added with advantage. Since nickel is more expensive than chromium, the use of the alloys proposed in the present invention would already offer considerable advantages for this reason alone. Similarly to all the "Isoperm" materials known heretofore, the said Fe-Cr alloys do not exhibit their "Isoperm" properties before they have become mechanically hard, whereas the high permeability values are obtained in a mechanically soft state. The said "Isoperm" properties can be achieved by means of cold or hot rolling. All the processes applied heretofore with iron-nickel alloys may also be used advantageously in the present case. Thus for instance, after having been hot worked at about 700 deg. Cent. to 90 per cent. reduction of area, an alloy containing 20.5 per cent. Cr, 4.5 per cent. Al, and 2.5 per cent. Si, with the remainder Fe and the usual impurities, exhibits an initial permeability of 55 which remains constant in fields of up to several oersteds, and an instability of the initial permeability of 2.8 per cent. after superimposing direct current fields of over 100 oersteds. It is also possible to apply the processes known for iron-nickel alloys in which the alloys obtain an ordered texture and, as a consequence thereof, particularly good properties in definite directions of magnetisation. Such a process, as applied to iron-nickel alloys, was described f. i. in the "Zeitschrift für Metallkunde" 1936, page 230–233. In every single case the alloys proposed according to the invention showed very good workability All these alloys possess high specific electrical resistance values and consequently low eddy-current losses, which make them particularly suitable for use with high-frequency alternating currents.

HERMANN FAHLENBRACH.

Published May 11, 1943

Serial No. 331,871

ALIEN PROPERTY CUSTODIAN

RESILIENT SADDLE FOR CYCLES, MOTOR-CYCLES AND LIKE VEHICLES

Enrico Musso, Turin, Italy; vested in the Alien Property Custodian

Application filed April 26, 1940

This invention has for its object a saddle for cycles and motorcycles (delivery tricycles, bicycles) of the type in which the seat support, which may itself be elastic, is hinged at its front end near the pointed end of the saddle to a horizontal pin arranged in a rigid frame and rests at its rear end on a resilient member fixed to the frame.

According to this invention, the resilient member is constituted by a laminated spring secured to the rigid frame which is in the form of a bar, the front end of which carries the pin and the rear end the laminated spring. The central part of the bar is provided with a fitting for the tube carrying the saddles. Big saddles for motorcycles are supported directly on the frame.

As the chord length of the laminated spring varies according to the deformation of the spring, the seat support is attached to the spring by means of a slotted cross-piece permitting said deformation; the slots are so inclined as to prevent any oscillation of the seat.

The annexed drawing shows an embodiment of the invention.

Fig. 1 is a rear view of the saddle;

Fig. 2 is a side view thereof;

Fig. 3 is a bottom partial view on an enlarged scale.

The saddle comprises, as usual, a seat support 1, which, in the example illustrated, is constituted by a plurality of helical springs which are covered by a stuffing material and a bar 2 to which the support is pivotally connected by means of a transversal pin 3, said bar 2 being secured to the bicycle frame. The support 1 is provided at its rear part with a cross piece 5 through which it rests on the laminated spring 5, the latter being secured at its central part to the bar 2 by means of a bolt 6. The laminated spring is level or slightly convexed downwards when in the inoperative position; under the weight of the cyclist the spring yields to a considerable extent and becomes convex upwards, its chord undergoing at each oscillation changes in length. For this purpose the spring ends may be displaced relatively to the cross-piece 4 and form an eyelet through which passes a pin 7 slidable in slots 4′ in the cross piece 4 and portion 4*a* thereof; these slots are slightly inclined to the axis of the cross piece, so that the length of the spring chord may vary within wide limits; when the spring is straight the pins 7 are positioned towards the outer end of the slots and when the spring is fully depressed the pins are placed towards the inner ends of the slots. Owing to the inclination of the slots 4′, the support 1 is prevented from oscillation or immediately returned to its central position should any inclination occur.

The saddle according to this invention is of light weight, comfortable and cheap in construction due to the absence of any articulations. When the saddle is intended for use on bicycles, the bar 2 is provided with a clamp 8 for attachment to the tube carrying the saddle; when used on motorcycles the bar 2 may be secured directly to the machine frame by means of lugs, clamps or the like suitably arranged.

The constructional details can be modified from what has been described and illustrated by way of example according to the intended use and other circumstances without departing from the scope of the invention.

ENRICO MUSSO.

PUBLISHED

MAY 11, 1943.

BY A. P. C.

E. MUSSO
RESILIENT SADDLE FOR CYCLES, MOTORCYCLES AND LIKE VEHICLES
Filed April 26, 1940

Serial No. 331,871

Fig. 1

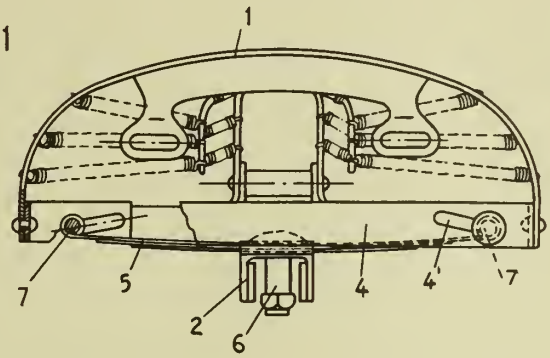

Fig. 2

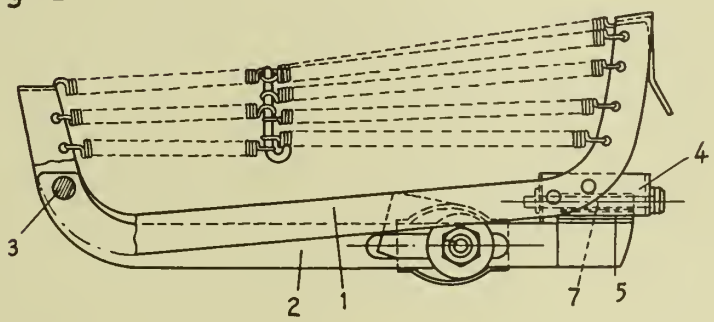

Fig. 3

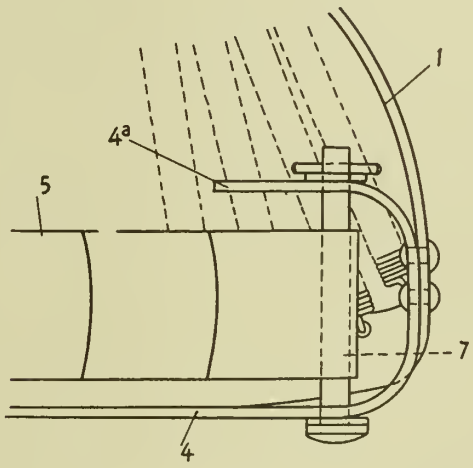

Inventor:
Enrico Musso
By
Herbert Berl
Attorney

Published May 11, 1943

Serial No. 332,417

ALIEN PROPERTY CUSTODIAN

CRUDE OIL BURNERS

Arien Dekker, Fynaart, Netherlands; vested in the Alien Property Custodian

Application filed April 29, 1940

The invention relates to improvements in crude-oil burners with a covered sloping annular evaporation gutter of which the residue drops at the lower end of the gutter into a separate combustion chamber where it burns and heats the gutter and its cover; and the objects of the improvements are, first, quick lighting of the hot economical principal flame, no going out of that flame when burning low and the maintenance of the entire evaporation of the lighter parts of the crude-oil and the maintenance of the small residue discharge from the gutter when burning at full capacity (see claims 1, 2, 3, 6, 9, 11, 12, 14); second, a sootless and smokeless combustion, even with little chimney draught, and a higher efficiency by giving the oil-gas flame and the residue flame a rotating motion in the same or opposite directions (see claims 4, 5, 8); third, the prevention of roaring of the burner (see claim 6); fourth, a higher efficiency and a hotter flame by pre-heating the combustion air (see claim 9); fifth, a better combustion of the residue by a better air-supply to the residue combustion chamber (see claims 7 and 8); sixth, a quicker heating up of the bottom of the residue combustion chamber (see claim 11); seventh, an even evaporation of the crude-oil in the gutter and the prevention of coke-formation in the gutter (see claim 10); eighth, a higher temperature in the residue combustion chamber (see claim 12); ninth, an easy lighting of the burner, and a sufficient supply of combustion air to the residue combustion chamber during the starting of the burner (see claim 13); tenth, the prevention of choking-up of the gas-outlet slit (see claim 15); eleventh, the prevention of air passing into and coke-formation in the gutter (see claim 16). One form of the invention is illustrated in the accompanying drawing in which Figure I is a vertical section of the entire burner, Fig. II a plan view of the burner without cover 3, Fig. III a plan view without the covers 3 and 8, Fig. IV a section through the cams 36 and notches 37, Fig. V a view of the cams 36, notches 37 and slots 15, Fig. VI a view of the crude-oil supply and Fig. VII a section of a gutter with two covers.

The burner consists of a covered annular evaporation gutter 12 with sloping bottom 13, a vertical gas-outlet slit 9, a fuel-supply 28 at the top of the slope, an outlet 31 of the not evaporated fuel (residue) at the lower end of the slope, a crude-oil gas combustion chamber 21 and a residue combustion chamber 32 for the burning of the heavy parts of the crude-oil, the flame of which heats the gutter and its cover 8, while rising through the hole 29 in the middle of the burner, which hole is formed by the annular gutter 12.

The lower end of the gutter has a sink 30. The gutter is provided with a small dam 35 between its higher end and the sink.

The gutter is entirely closed by the cover 8 except for a vertical gas-outlet slit 9. The cover is hollow in order to get a high temperature more quickly and this hollow has ribs 6, which extend into the hole 29. The outside of the cover 8 has a vertical upward extension 7, which projects above the top of the gas-outlet slit 9 and joins the inclined ascending upper surface 5 of the cover, which surface has tangential ribs 4. The cover has on its underside a sharp edge 11. The wall of the gutter has a sharp edge 10 to prevent oil creeping up into the gasslit 9. The outer wall of the gutter has a vertical upward extension 25, which has holes 24 and slots 23 for the supply of combustion air to the combustion chamber 21. The upper edge of this extension 25 supports a cover 3 with a narrow aperture and a cylindric flange 2. The gutter fits close and with a bevelled side 14 upon the bevelled edge 16 of the ashbox 18, which forms the residue combustion chamber 32. The bevelled side 14 is provided with tangential slots 15, which give the passing combustion air a rotating downward motion. The ashbox 18 has a centre-piece 27 with a brim 22 cast with the bottom of the ashbox. The gutter has tangential ribs 19 on its underside. It has slanting cams 36 fitting in slanting notches 37 in the wall of the ashbox 18, which is connected by means of screws 17 with a protection base 20 having a handle 33. The space between the ashbox 18 and the protection base 20 is filled up with isolation material 34. The burner has a jacket 26 for the pre-heating of the combustion air. The burner is pressed by means of a spring support against the flame inlet pipe 1 of the range or stove or geyser (etc.), which is connected with a chimney. The crude-oil is supplied from a tap 38 at a fuel tank, through an oil-pipe having a funnel 39 and an oil-lock 40.

Another form of transmitting heat from the oil-gas flame to the gutter 12 is illustrated by Fig. VII. In this case the gutter has two covers 41 and 42 having the gas-outlet slit 43 between them. The cover 42 is of one piece with the ring 44 having holes 24 and with the cover 3. The working of the burner is as follows:

The gutter 12 is raised from the ashbox 18 by holding the gutter in its place and turning the handle 33 away from it thereby obtaining sufficient space to throw a burning match into the

thin layer of crude-oil, which has dropped from the fuel-tap 38 in the funnel 39 and flown through the oil-lock 40, the hole 28, the gutter 12 and the residue-hole 31 upon the bottom of the ashbox 18. The flame rises through the hole 29 heating the bottom 13 of the gutter 12 and its cover 8 with ribs 6 and the brim 22 of the centre-piece 27 on its way to the appliance, which has to be heated. The centre-piece 27 transmits its heat to the bottom of the ashbox 18 causing such a faster yield of gas, so that flames pass outside and back into the combustion chamber 21 through the holes 24 and heat the ribs 4 and the surface 5 of the cover 8. Soon the evaporation of the crude-oil in the gutter becomes so great that oil-gas escapes through the gas-slit 9 and is ignited by the flame from the lower combustion chamber 32. In the meantime this flame has begun to heat the appliance.

The oil-gas flame, which is the hot and economical flame, the principal one, touches the ribs 4 and the upper surface 5 of the cover 8 obtaining its combustion air through the holes 24 and the slots 23. Soon the evaporation reaches its maximum and very little residue (depending on the quality of the fuel) passes through the hole 31 into the residue combustion chamber 32. Then flames no longer pass to the outside from the chamber 32, the handle 33 is turned back and the gutter 12 fits again close on the ashbox 18, combustion air passing only through the small slots 15, as only a small quantity of air is required for the small residue flame (a great quantity would cool down the bottom of the gutter too much and decrease the evaporation of oil). The tangential ribs 4 and 19 give the oil-gas flame and the residue flame rotating motions causing a better combustion. Moreover the mixtures of gas and air colide with the hot ribs 4 and 19 thereby improving the combustion. The oil-gas flame heats the extended wall 25 of the gutter, which heat assists the evaporation of the crude-oil in the gutter. The contact of the oil-gas flame with the ribs 4 and the surface 5 and the extended wall 25, and of the residue flame with the ribs 19 assures a maintenance of the evaporation during small fuel supplies (preventing flame extinction) and assures firstly a full evaporation of the lighter parts of the crude-oil; secondly a small residue discharge through the hole 31 at full capacity; thirdly quick attaining of the full capacity of the burner. When burning at full capacity the burner has an inclination to roar, which is prevented by the vertical extension 7 of the outside of the cover 8 and its inclined ascending surface 5. While the crude oil evaporates on its way through the gutter its viscosity changes. Therefore the pitch of the slope is made to suit these viscosities at various parts of the bottom.

I am aware that prior to my invention crude oil burners have been made with a covered sloping annular evaporation gutter, a residue outlet at the lower end and a residue combustion chamber underneath.

ARIEN DEKKER.

PUBLISHED

MAY 11, 1943.

BY A. P. C.

A. DEKKER

CRUDE OIL BURNERS

Filed April 29, 1940

Serial No.

332,417

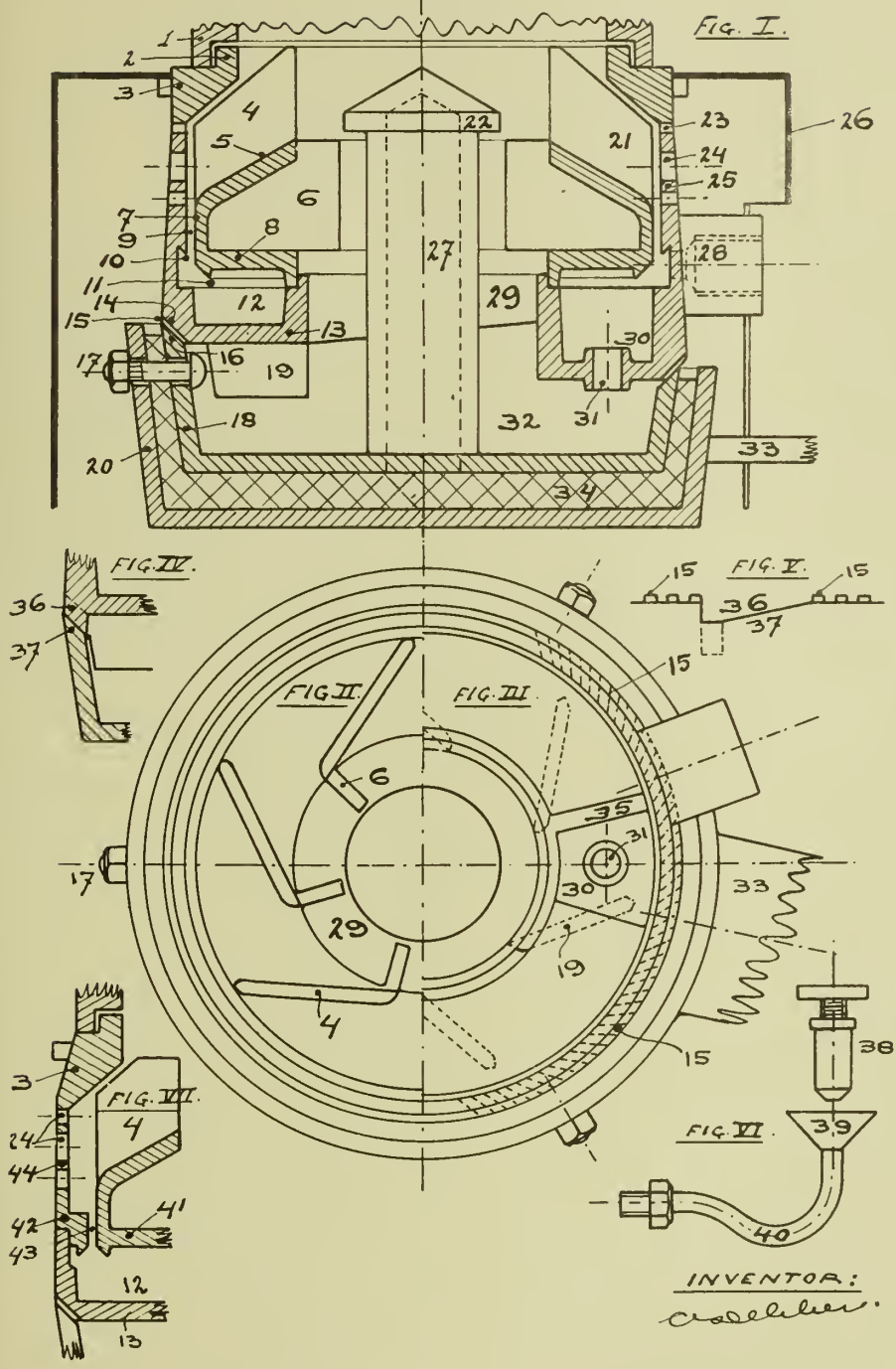

Published May 11, 1943

Serial No. 332,506

ALIEN PROPERTY CUSTODIAN

INTERNAL COMBUSTION ENGINE

Fritz Nallinger, Stuttgart, and Wilhelm Glamann, Stuttgart-13, Germany; vested in the Alien Property Custodian

Application filed April 30, 1940

This invention refers to a fuel injection type internal combustion engine specially injecting a volatile fuel as gasoline or the like with an ignition by an ignition device, and aims at an improved manner of operation of such engines, specially by means of a most uniform enriching of the combustion air with fuel which seems to be of great importance for such engines. Above all, the invention takes reference to the circumstance that at a valve governed intake the air enters the cylinder space in comparatively thin and wide jets or streams having essentially the form of a plane or a band.

According to the above, the invention consists in the fact that with an interior combustion engine, specially of the kind described, the fuel jets must be injected in such a manner that they essentially extend within the taken-in air currents, spreading band- or plane-formed, vertically or slantingly to the streaming direction of the air, seen in a view into this plane.

Experiments have proven that when intake valves are arranged at the cylinder head of an internal combustion engines, essentially two air currents are created across the valve axle or the cylinder axle, one of these currents running above the valve head and the other below the same, the lower one after passing through the valve-gap being deviated around the rim of the valve head. Preferably the fuel is injected across this band-formed air current, entering either across the head of the opened valve into the valve-gap, or below the same into a current-band deviated for instance by the cylinder wall or the like. The scope of the invention allows to apply both ways of injection with one valve.

If for instance at the top of the combustion space two disc valves are located next to each other on one cylinder side, eventually opposite to two spark plugs, the fuel will preferably be injected in four jets grouped in pairs, one jet of each pair passing at the inner side of an inlet valve, and another respectively at the outside of the valves. The spray nozzle in this instance is preferably located in the symmetry plane of the spark plugs and valves, and practically below the latter and opposite to the plugs.

In the drawing the invention is shown by way of example in one type.

Fig. 1 shows a cross section through the combustion space of an internal combustion engine working with separate ignition and mixture compression.

Fig. 2 is a longitudinal section through line II—II of Fig. 1.

Fig. 3 is a longitudinal section through line III—III of Fig. 1.

Fig. 4 shows an inlet valve diagrammatically drawn in a slanting view form above.

In the shown example the cylinder head **1** shows two inlet valves **2**, **2'** located next to each other in the top of the combustion space. Both valves are placed opposite to two outlet valves **3**, **3'**. Between the inlet valves **2**, **2'** a spray nozzle **4**, inclined by about 20° downward, discharges, and next to the outlet valves opposite to the spray nozzle with little space between them, two spark plugs **6**, **6'** are located. Preferably injection is started when the piston performs its sucking action and moves relative to the crank pin 25 to 30° in back of its upper dead centre downward. At this time both inlet valves are open. Through these the air enters in streaming forms which are the result of a test, and are illustrated by the enclosed drawings. Three distinctly different streaming bands are distinguished from each other. Firstly a certain quantity *a* (Figs. 1 and 3) of air streams towards the nozzle. But as the two streaming bands, leaving the two valves **2**, **2'** influence each other, immediately in front of the mouth of the inlet nozzle **4**, and between the valves **2**, **2'** a slowly streaming dead zone *b* (Fig. 3) remains, below which the two streaming bands *a* and *a'* unite to a single stream-band *a''* (Figs. 2 and 3) in downward direction. A second streaming band, deviated by the proximate cylinder wall, pertaining to each inlet valve, describe below the valve head, an eddy *c*, *c'* which moves upward (at *c''*) towards the middle of the cylinder space. With this one unites a third streaming band *d*, *d'*, immediately leaving the inlet passage, forming together with it a strong total current *e* (Fig. 2) moving across the combustion space and along the top of same. The charging air follows therefore the downward moving piston in two larger air columns *a''* and *e*. Into these streaming bands of the charging air the fuel is injected preferably in four jets **7**, **7'** and **8**, **8'** and in such a manner that it enters the plane of the streaming bands essentially perpendicularly to the streaming direction of the air. Particularly two jets **8**, **8'** which are relative to the axle of the spray nozzle or to the symmetry plane on the inside, inject into the streaming bands *a*, *a'*, and two outer jets **7**, **7'** run across or come in contact with the eddies or stream bands *c*, *c'*. As the fuel jets **7**, **7'** or **8**, **8'** lie inside the plane of the streaming band, they are transversely taken hold of and blown away across the

streaming band plane. The fuel quantity of the jets **8** and **8'** distribute in the air currents *a''* and *d*, *d'* and the fuel quantity of the jets **7**, **7'** in the air currents *c*, *c'*. The jets **7**, **7'** require relative to the jets **8**, **8'** a somewhat higher permeability because they have partly to penetrate the streaming band *a* or *a'*. Under circumstances it seems practical to inject the fuel also in a fifth jet **9** (Figs. 1, 2 and 3). This jet which is directed radially and upward enters through the slow streaming zone *b* and through the valves **2**, **2'** and is grasped finally by the uniting streaming bands *c*, *c'* of equal direction. This jet cools the section of the combustion space above the nozzles and specially enriches strongly the section between the spark plugs, as it will not be blown away transversely.

In connection with the described manner of injection it will be preferable to choose a more than normal intersection between the intake start and the outlet end which may amount to 60 to 140°, for example about 90° for a four stroke motor, and for two stroke motors about 110 to 160°. In order to avoid fuel losses at such a regulation of the intake and outlet times it will be practical to inject only after the finished scavenging i. e. immediately before the closing, at the closing or after the closing of the outlet valve.

The expressions applied here, like "band- or plane-formed charging air currents" or "planes" of these currents are naturally to be understood only symbolically, as they do not exclude certain deviations, if only the nature of the invention will be retained. Thus these air currents may have some more or less large spacious extension. Also the injection of the fuel must not take place exactly in the mentioned plane which essentially means a plane contacting the stream-band in that place where the fuel jet traverses the air current.

FRITZ NALLINGER.
WILHELM GLAMANN.

PUBLISHED

MAY 11, 1943.

BY A. P. C.

F. NALLINGER ET AL

INTERNAL COMBUSTION ENGINE

Filed April 30, 1940

Serial No.
332,506

Fig. 1.

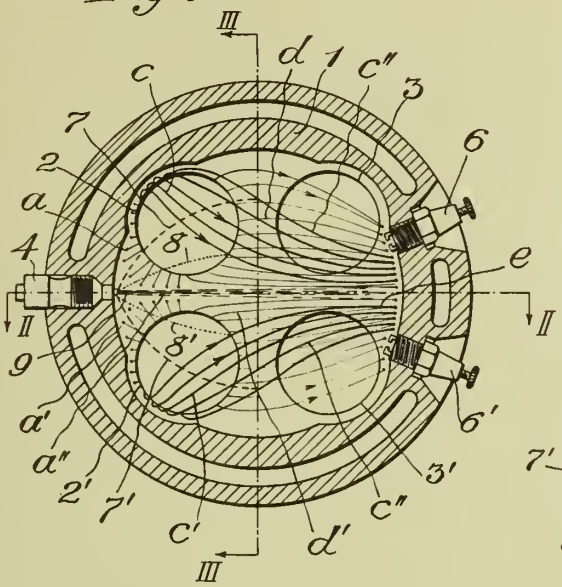

Fig. 4.

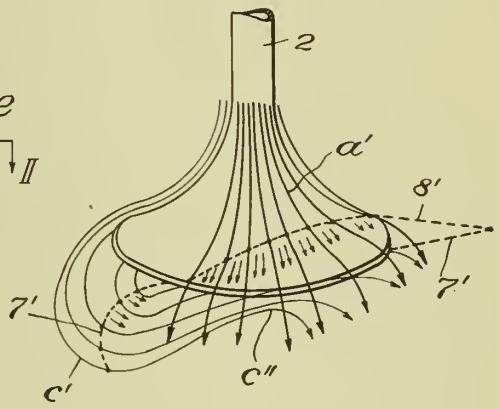

Fig. 2.

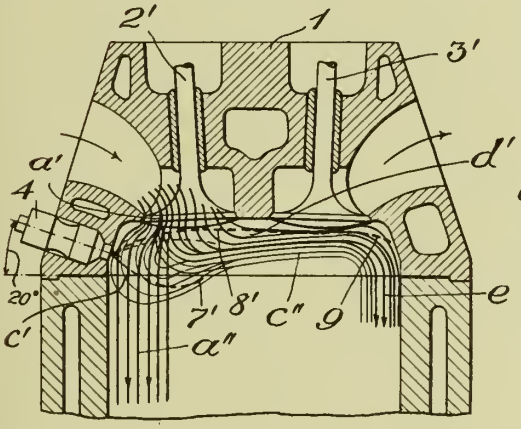

Fig. 3.

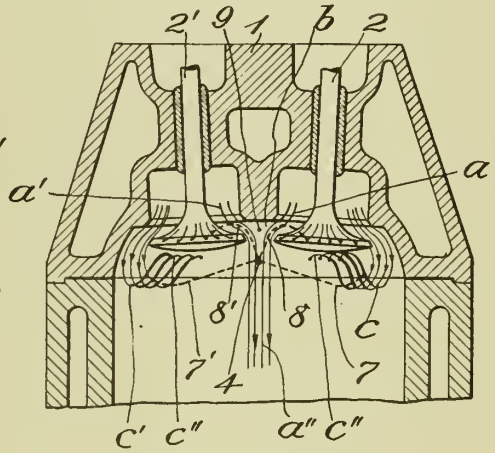

INVENTORS
Fritz Nallinger
BY Wilhelm Glamann
A. A. Lieber
Merrill Rowe Jr.
ATTORNEYS

Published May 11, 1943

Serial No. 332,850

ALIEN PROPERTY CUSTODIAN

ADHESIVES

Hendrik Willem Meijer, Veendam, Netherlands;
vested in the Alien Property Custodian

No Drawing. Application filed May 1, 1940

The object of the present invention is to provide an adhesive which is excellent for many purposes and may be applied in the form of a viscous suspension or paste and obtains its adhesive power by subsequent heating.

An other object of the invention is to provide an adhesive capable of sticking layers of cardboard to cardboard, paper to cardboard, or paper to paper, to form a quasi homogeneous unit. Again an other object of the invention is to provide a neutral adhesive fit for being applied to metal foils, such as aluminium foils and other substances that are not alkali proof. An other object is to provide a cheap and easily obtainable adhesive for industrial application which does not chalk on drying.

The adhesive according to the invention is obtained by suspending non starchified amylum, such as sago amylum, tapioca amylum, maize amylum, but preferably potato amylum, in a colloidal mannan containing aqueous solution of constituents of ground dried bulbs of plants of the genus amorphophallus, and especially of bulbs, of amorphophallus oncophyllus.

If this suspension is heated to a temperature at which the amylum starchifies it becomes a very strong adhesive.

The adhesive according to the invention may be applied as a layer between the objects to be united and then sufficient heat is added to starchify the amylum. The starchified amylum is the principal adhesive. The mannan containing carrier assists its action and promotes the water proofness of the layer of adhesive. This is caused by the property of the mannan solution that by drying at elevated temperature the mannan becomes insoluble in water. The water proofness may be increased by the action of alkali (e. g. ammonia) but preferably alkalis are not added before the adhesive is applied between the objects to be united because alkali has a deflocculating action on the mannan hydrosol, generally if the pH of the sol is above about 11.

In order to make the adhesive fit for being stored it is preferable to add a suitable antiseptic in order to prevent decomposition by moulds or bacteria.

The preparation of the adhesive is very simple, e. g. the bulbs of amorphophallus oncophyllus, after sufficient cleaning, are cut into slices which are dried and ground. It is important to obtain a very finely ground meal, because the finer the particles, the easier it is to obtain a solution of high viscosity. The finely ground meal is then dissolved at ordinary or slightly increased temperature e. g. to obtain a solution containing 0.2–2% of the meal. Boiling of the solution should be avoided because the meal dissolves badly in boiling water. Obviously the mannan is affected by boiling water. Amylum and mannan are preferably mixed together before dissolving.

The obtained solution is a viscous hydrosol in which large quantities non starchified amylum, preferably potato amylum, can be suspended. The viscosity is increased thereby. By adjusting the concentration of the colloidal solution and the quantity of suspended amylum the viscosity can be controlled within wide limits. In order not to increase the viscosity unduly one may use a less concentrated hydrosol with the same quantity of amylum. Even in a diluted hydrosol it remains suspended and can be used as an adhesive. In order to develop the adhesive properties, however, it is necessary to heat until the amylum is sufficiently starchified to obtain the required adresive power. If sufficient heat is applied also the mannan of the hydrosol becomes insoluble and waterproof, said reaction being promoted by the presence of alkali.

It is, however, a considerable advantage of the new adhesive that it has a neutral reaction. An excellent adhesion is obtained without any alkali, e. g. it is possible to unite layers of cardboard which is impossible with common starch. The adhesive impregnates the layers before the development of the adhesive power. By the subsequent heating starchifying takes place and adhesive properties are developed. In such manner the layers are completely united.

Due to its neutral reaction the adhesive is also very fit for applying to substances which are not alkali proof, such as aluminium foil.

The adhesive may be mixed either before or after dissolving also with a modified starch e. g. an oxidised or hydrolysed or malt-treated starch or with other substances with adhesive properties.

Example 1

300 cm_3 water are stirred at room temperature with 1 g finally ground bulbs of amorphophallus oncophyllus, thereby obtaining a viscous hydrosol. 30 g ordinary potato amylum are suspended therein and thereby an adhesive is obtained that on heating developes excellent adhesive properties. One may add to the suspension further quantities of potato amylum and obtain thereby suspensions or pastes of any viscosity. It is also possible to dilute the hydrosol considerably by the addition of water before adding the amylum. In this

manner larger quantities of potato amylum may be added for obtaining the same viscosity.

Example 2

30 g potato amylum and 1 g oncophyllus are mixed. The mixture is suspended in 300 cm^3 cold water by simply stirring for 30 minutes.

The longer is stirred the more homogeneous the amylum suspension becomes. After that time it is ready for use.

Example 3

50 g sago amylum and 0.6 g oncophyllus are mixed. The mixture is suspended in 300 cm^3 water and stirred for 30 minutes and is then ready for use.

The amylum containing adhesive may be brought into the trade if a preservative is added which prevents the growths of moulds and bacteria.

HENDRIK WILLEM MEIJER.

Published May 11, 1943

Serial No. 333,249

ALIEN PROPERTY CUSTODIAN

PROCESS FOR WATER-REPELLING IMPREGNATION OF TEXTILES, PAPER, SKINS, AND LEATHER

Adalbert Müller, Augsburg, Germany; vested in the Alien Property Custodian

No Drawing. Application filed May 3, 1940

For rendering materials water-repellent and waterproof, there are used aqueous emulsions of paraffin, waxes, resins and soaps of polyvalent metals, together with aluminum salts. The emulsions contain protective colloids and emulsifiers, such as gelatine, glue and other albumins, or sulphonation products of aromatic and aliphatic hydrocarbons. All these compounds serve to stabilize the emulsions, i. e. to maintain the emulsified substances in the finely dispersed state. However, they are not necessary for obtaining the water-repellent effect; on the contrary, they may even impair that effect. There is also the danger of re-emulsification when cleaning the impregnated materials.

The emulsions and the aluminum salts are either used in two baths, or the aluminum salts are added to the diluted emulsions. An improvement was obtained by proposing to combine all substances in a concentrated emulsion which, after being diluted, served to prepare the treating bath.

The degree of the impregnating effect inter alia depends on the quantity of aluminum salts used. However, large quantities of aluminum salts are difficult to incorporate in commercial emulsions containing protective colloids, because the viscosity of the solution of the protective colloid or of the emulsion increases very much, a great force or high temperatures being required for continue mixing. On the other hand by a high temperature the mostly used protective colloids are decomposed, hardened or impaired. The stability of the obtained emulsions has suffered or the emulsions are difficult to dilute.

All these difficulties may be avoided if for rendering materials water-repellent there are used aqueous emulsions which contain no protective colloids, but, practically, only the impregnating substances, viz. aluminum salts or salts of tetravalent metals and fatty substances. The quantity of the aluminum salts used in such emulsions may vary within wide limits, according to the desired effect.

Furthermore, the emulsions have the advantage of much less changing the feel of the materials treated therewith than those containing protective colloids, at the same time producing generally equal and often even better impregnating effects. Especially the waterproofness is considerably increased according to pressure tests by Schopper's method.

The absence of a protective colloid avoids also that the treated fabrics are subjected to the risk of mould and damp stain formation.

In addition, the emulsions used according to the present invention may be readily diluted with water, whereas the commercial emulsions containing protective colloids often have to be melted before they can be diluted, as gelatine or glue, which are mostly used as protective colloids for such purposes, will jellify when becoming cool.

Finally, impregnations with emulsions according to the present invention will to a great extent often stand laundering or dry cleaning.

In preparing the emulsions it is, of course, necessary to adapt the properties of the fatty substances and of the aluminum salts to one another. The aluminum salts or the salts of tetravalent metals must be basic, i. e. they must contain less than the equivalent quantity of acid, whereas the fatty substances should have a low acid value of about 10 to 25; otherwise it is necessary to add fatty acids, their alkaline soaps, alkaline salts of soap-like, capillary-active substances or their free acids in quantities of about 10% or less of the weight of the fatty substances. This may be effected by addition to the fatty substance or also to the metal salt solution, but should in any case precede the emulsification.

Suitable fatty acids are especially such with 16 or more carbon atoms. They may also be unsaturated or they may contain oxy-groups. Examples of "soap-like, capillary-active substances" are compounds such as sulphonated oils, fats or fatty alcohols, aliphatic, aromatic or hydroaromatic sulphonic acids, condensation products of fatty acids with oxy- or amino-ethane sulphonic acid or their derivatives or homologues, or with albumin cleavage products.

By "fatty substances" there are to be understood saponifiable waxes, fats, oils and resins, as well as fatty alcohols, paraffin hydrocarbons or mineral oils or soaps of polyvalent metals. The most important substances are waxes and paraffin hydrocarbons, but the other fatty substances are also of importance, particularly as additions to these compounds.

The emulsification is effected by mixing the melted fatty substances with a warm aqueous solution of the metal salts. It is facilitated if organic solvents are also added to the fatty substances, especially in the amount of 50% to 100% of their weight. This causes at the same time an increased wetting-out effect of the treating baths prepared with the emulsions so that the impregnation may be effected more rapidly and at a lower temperature. As solvents there are preferably used chlorinated hydrocarbons, such

as carbon tetrachloric, trichlorethylene, chlorbenzol, but also many others solvents, as benzol, benzene, tetralene or diethylene-dioxide are suitable.

Various preparing methods are described in applicants copending patent application, dated 23rd February, 1940, "Aqueous emulsions and process for their production."

The emulsions according to the present invention are throughout oil-in-water-emulsions with an acid reaction, containing in excess basic salts of aluminum and tetravalent metals. The proportions of all the fatty substances and the metal salts, expressed as aluminum oxide, are such that to one part of the latter there may be about ½ to 7 parts of the fatty substances. The quantities of fatty acids, soaps, or soap-like, capillary-active substances, as far as at all present, amount to about 10% or less of the weight of the fatty substances.

The aluminum salts and the salts of tetravalent metals may both be present. Highly suitable of the latters are zirconium, thorium, uranium and titanium.

Furthermore, salts, acids or dressing agents may subsequently be added to the emulsions or to the diluted treating baths if special effects are desired.

Advantageously, the treating baths are prepared with concentrated emulsions diluted with a multiple quantity of water. Apart from lower costs of transportation and production, the concentrated emulsions also have the advantage that the proportions of the salt and fatty substances may fluctuate within considerably wider limits which also makes it possible to obtain a better adaption of the composition to the desired impregnating effect.

The impregnating methods are those which are customarily applied with aqueous emulsions. Drying may also be effected in the usual manner.

The following examples are to illustrate the process without, however, limiting its scope.

Example 1.—An emulsion prepared by intimately mixing 30 kgs. of a solution of basic aluminum formate (22% Al_2O_3 and 31% of formic acid) and 60 litres of hot water on the one hand and a melted mixture of 20 kgs. of paraffin, 10 kgs. of paraffin oil, and 3 kgs. of oleic acid, on the other hand, is diluted with warm water in the proportion of 1 to 25 and placed in a jigger or a padding machine. Gabardine cloth consisting of wool or of wool and rayon staple fibre is treated therewith by repeated passage at a temperature of 30° to 40° C, squeezed out and dried. It possesses very good water-repellent properties and also a good waterproofness.

Example 2.—4 kgs. of an emulsion containing 5,7% Al_2O_3, 6,3% of formic acid and 14,3% of hard wax (melting point 70° C, acid value 19), and prepared by intimately mixing the melted wax with a solution of basic aluminum formate, are diluted with 100 litres of warm water. On a jigger or a padding machine there is treated mantle cloth by repeated passage at 30° C and then finished as usual.

The cloth may also be impregnated, after dyeing and rinsing, on a washing machine with 5% of the above emulsion, calculated on the weight of the article. The article runs for an hour through such a bath, whereupon it is dried and finished. In this way too, there is obtained a very good water-repellent and waterproof impregnation. If for the bath there is used water of a higher temporary hardness or alkaline reacting water, a prealable addition of a small quantity of acetic of formic acid is of advantage in order to avoid the flocculation of the highly diluted emulsion. The effect may be still more increased by adding to the emulsion, for example, 2% of crystallized zirconium oxychloride or thorium nitrate and a corresponding quantity of sodium acetate in order to neutralize the mineral acid.

Example 3.—Wool yarn or mixed yarn of wool and rayon staple fibre is impregnated on the vat or in a yarn dyeing apparatus with a bath prepared by diluting 2 kgs. of an emulsion containing 25% of wax and 6% of zirconium oxide in the form of the basic acetate with 100 litres of water. The impregnation is effected at 30° to 40° C after the dyeing. The emulsion may be prepared by emulsifying a wax having an acid value of 20 with a solution of basic zirconium acetate.

Example 4.—A concentrated emulsion is prepared by emulsifying a solution of 6,5 kgs. or paraffin in 1,5 litres of carbon tetrachloride with 80 litres of an aqueous solution of basic aluminum formate (8% Al_2O_3) which also contains 0,3 kgs. of sodium salt of tetralene-sulphonic acid. A 2% to 4% dilution of this emulsion may be used for impregnating paper and is, for this purpose, sprayed on the paper sheet by means of a suitable device. Thereupon the paper sheet is dried and then possesses water-repellent properties and an increased tearing quality so that it is suitable as packing material.

The impregnation may also be effected in the beater engine by adding the emulsion to the paper pulp.

A 2% dilution of the emulsion may also be used for producing impregnated paper yarn, in which case the solution serves for moistening and damping the paper band before the cutting. The strips which are still wet are wound to the yarn in the spinning machine and subsequently dried.

Example 5.—Together with the water-repellent impregnation, textiles may also be subjected to other treating operations, for example rendering crease-resistant. For this purpose, an emulsion is used which is prepared by emulsifying 80 kgs. of hard wax (acid value 12), 25 litres of paraffin oil, and 30 litres of carbon tetrachloride or another chlorinated hydrocarbon on the one hand, and 210 kgs. of an aqueous solution of basic aluminum formate and zirconium formate (19% Al_2O_3, 2,5% ZrO_2, and 25% of formic acid) on the other hand, and subsequently stirring in of 70 litres of warm water. 6 kgs. of this emulsion, 1 kg. of urea and 2 litres of formaline are dissolved in 100 litres of water. Addition is suitably made of 300 gs. of tartaric acid. Then a rayon plush is treated by passing it twice times on the sizing machine at 40° C. Thereupon the plush is brushed, dried on the tenter at 70° C and subsequently subjected for 10 minutes to a heating of about 140° C. It possesses very good water-repellent and to a large extent crease-resistant properties.

Example 6.—The impregnating may be combined simultaneously with filling operations, such as they are necessary with canvas and tents fabrics. There is used a bath containing 8% of the emulsion according to the present invention and, furthermore, 2% of glue, 3% of dextrine and 2% of an aluminum formate solution of 12° Bé. The goods are placed into the bath in the dry state and pass twice times on the padding machine at 50°–60° C; they are subsequently dried as usual.

The emulsion used for the bath may be pre-

pared by emulsifying a mixture of paraffin, paraffin oil, copper oleate and trichlorethylene with an aqueous solution of a basic aluminum formate and the sodium salt of an alkylated naphthalene sulphonic acid, and contains 16% paraffin, 8% of paraffin oil, 1,6% of copper oleate, 24% trichlorethylene, 10% aluminumoxide and 2% of the sulphonic acid salt. The copper oleate serves as preserving agent for the glue and the dextrine.

Example 7.—Leather may be impregnated by lubricating it as usual in the fulling trough with a train-oil emulsion, then continuing the fulling for about an hour with 5% of an emulsion according to the present invention (calculated on the weight of the leather) and the required quantity of water, and then finishing as customarily. Such an emulsion contains, for example, 7,3% of Al_2O_3, 12,0% of paraffin, 4,5% of paraffin oil, 1,2% of stearic acid, and 14,1% of trichlorethylene, and is prepared by intimately mixing paraffin, paraffin oil, fatty acid, and solvent on the one hand, with an aqueous solution of basic aluminum formate, on the other hand.

Example 8.—For impregnating skins, it is advantageous to use undiluted emulsions and to spread them thereon, whereupon the skins are dried on the ironing machine, roughened up, and sheared. If required, the treatment is repeated in order to increase the effect. Finally, the skins are beaten. A suitable emulsion is, for example, one that is prepared by emulsifying 24,5 parts by weight of a mixture of paraffin and paraffin oil, to which are added 10% of oleic acid, with 72 parts by weight of a solution of basic aluminum formate, containing 7,3% Al_2O_3 and 10,1% of formic acid. There may also be added to the emulsion organic solvents for more rapidly wetting the skins, as well as glazing agents, such as are customarily in use in preparing furs, as for example adipic acid esters.

Example 9.—13 kgs. of resin are allowed to swell up for some hours in the equal quantity of perchlorethylene, dissolved by heating and mixed with 64 kgs. of melted paraffin. Thereupon the mass is intimately mixed at 50°–60° C with 120 kgs. of a basic aluminum formate solution (22% Al_2O_3, 31% of formic acid), which contains 3 kgs. of a not neutralized sulphonated oil. Finally, 52 litres of warm water are added.

A bath, containing 1% of this emulsion, may be used for impregnating acetate rayon yarn on a cheese dyeing apparatus. The yarn which is dyed and rinsed, is hydroextracted and treated with the bath on the apparatus for 30–40 minutes at 40° C, then again hydroextracted and dried. It may be used for the manufacture of umbrella silk.

The treatment on the yarn dyeing apparatus involves a further advantage of the emulsions according to the present invention in that they are much less foaming than emulsions containing protective colloids, such as glue.

ADALBERT MÜLLER.

Published May 11, 1943

Serial No. 333,312

ALIEN PROPERTY CUSTODIAN

SEWING MACHINE AND NEEDLE

Georges Bastard, Saint-Junien, and Gaston Huguet, Angouleme, France; vested in the Alien Property Custodian

Application filed May 4, 1940

The object of this invention is the execution of a saddler's seam, either flat or overcast, hitherto sewn by hand.

The special feature of this invention consists:

1. In the mobility of the needle which enables the making of a single-stitch seam;

2. In the system of guiding and tension of the thread by tension holders;

3. In the shape of the needle.

The annexed drawings show, diagrammatically and as an example, one form of carrying out the invention:

Fig. 1. Ensemble of the mechanism shown in front elevation.

Fig. 2. Guiding tension of the thread.

Fig. 3. Pressure foot and stitches to be obtained, A and B.

Fig. 4. Needle.

Fig. 5. Adjustable coupling sleeves, shown in elevation.

Fig. 6. Elevation-section of the coupling sleeves.

Fig. 7. Cams and their driving mechanism, shown in elevation.

Fig. 8. Cams and their driving mechanism, plane view.

Fig. 9. Tightening and loosening device of needle-holders, shown in elevation.

Fig. 10. Tightening and loosening device of needle-holders, plane view.

The working of the machine for obtaining stitches A and B (Fig. 3) is as follows:

Two cams 1 and 2 fixed on a shaft 3 give, at the same time, the forward and reverse movements to two sleeves 4 and 5 with concentric gripping and tightening, which move towards each other and apart from each other in the same way.

The dead centres are diametrically opposed.

The sleeve 4 is coupled directly to the cam 2, and the sleeve 5 to the cam 1. The shaft 6 is the driving shaft of all the mechanisms.

The locking of the needle-holders 4 and 5 is obtained in the following way:

The needle 7 being tightened in the holder 4 moves towards the holder 5 which will grip it, the needle having gone through the pressure foot 14 and the material to be sewn. To enable the needle 7 to be loosened by the holder 4, when the latter is at the inside dead centre and, at that moment, engaged in the bolt 8 by means of the adjustable pin 25, the bolt 8, driven by the tappet 10, on being lowered loosens the threaded ring of the holder 4 and frees the needle 7 which, being already engaged in the holder 5, is tightened by being raised into the latter by the bolt 9.

The two bolts act simultaneously by a seesaw movement 11, produced by the tappet 10, and therefore ensure the tightening and loosening of the needle.

To produce this seam, as the needle 7 is not immobile but is pulled in the two directions by the holders 4 and 5, it must be able to stitch at both its extremities, the gauged threading hole 17 is therefore placed between the two ends, without necessarily being in the centre.

The two ends of the needle 18 and 19, can be tapered either in a round section point or in a triangular section point.

To allow the guiding of the thread, or other material used for sewing, two guiding levers 12 and 13 are provided, which act in the following way:

As soon as the needle 7 has passed through the pressure foot 14, carrying the thread fixed in its threading hole 17, the guiding lever which corresponds to the working direction of the needle takes up the thread behind the needle and guides it along the work over the required length. As and when each stitch is put in by the needle, the movement is repeated to guide the thread, thus enabling the stitch to be produced mechanically. As the thread decreases in length with each stitch, two compensating levers 15 and 16 enable the guiding levers 12 and 13 to reduce their stroke automatically as the seam progresses. The guiding levers are adjustable to enable the thread to be guided over the different lengths required by the work to be done.

The continuous circumferential movement of the discs 26 and 27 carrying the pins 28 and 29, which discs are independent and diametrically opposed, engages simultaneously the stops 15 and 16 through the springs 30 and 31 and the pins 32 and 33, the latter being fixed on the hubs of the levers 12 and 13 for the guiding and tension of the thread.

When the thread is completely tense, the springs 30 and 31 are compressed, which enables the pins 28 or 29 to be released, and the springs 34 or 35 bring the levers 12 or 13 back into their starting position.

The work to be sewn is guided by means of two milled wheels 20 and 21, turning the one on the other and adjustable according to the length of stitch required.

To obtain the overcast seam B, fig. 3, the pressure foot can be rendered movable by a grooved disc 23 driving a connecting rod 22, adjustable as to length, and coupled to the pressure foot 14. The circumferential movement of the milled wheels 20 and 21 is produced by the bevelled pinion 24.

G. BASTARD.
G. HUGUET.

PUBLISHED

MAY 11, 1943.

BY A. P. C.

G. BASTARD ET AL

SEWING MACHINE AND NEEDLE

Filed May 4, 1940

Serial No.
333,312

3 Sheets-Sheet 1

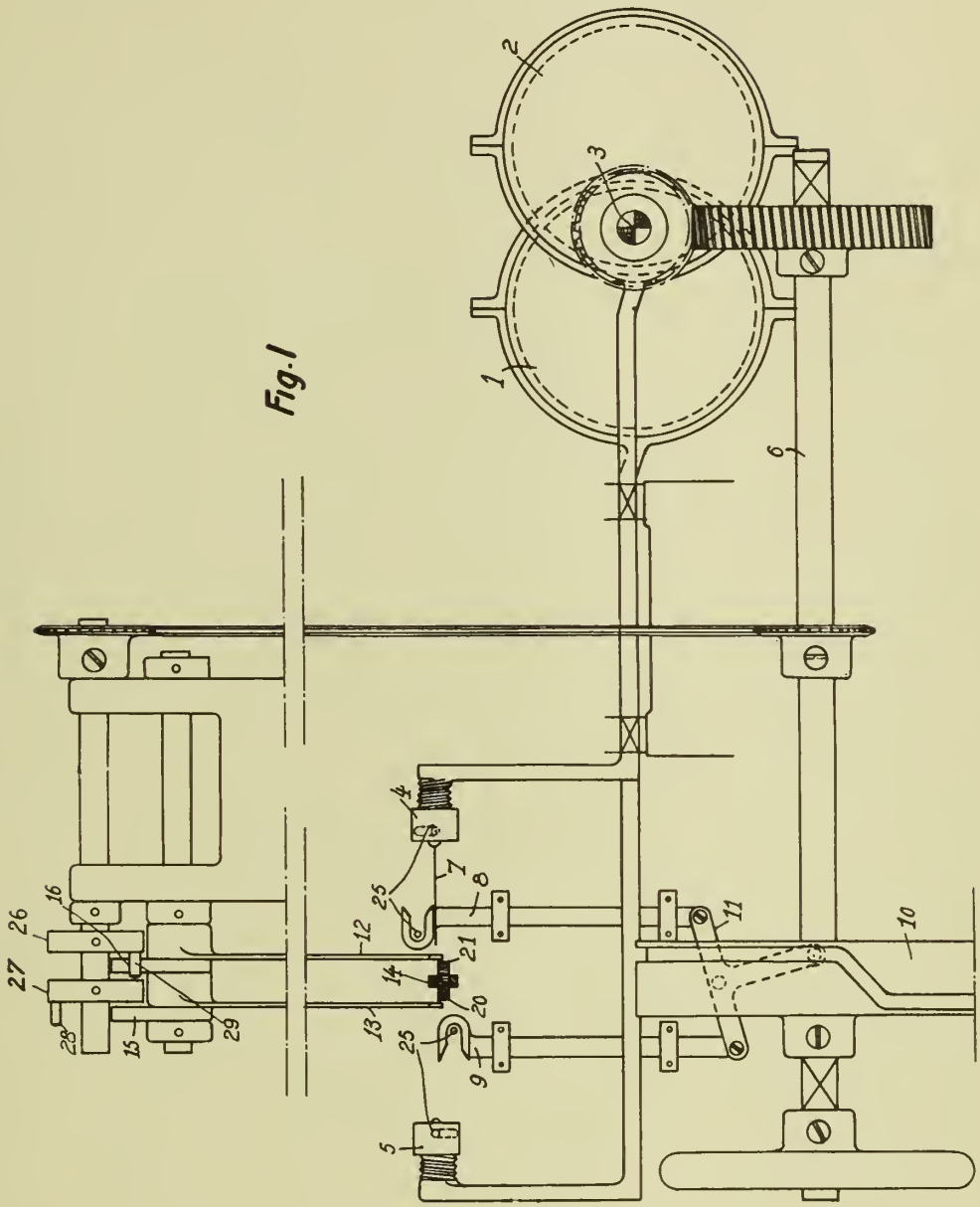

PUBLISHED
MAY 11, 1943.
BY A. P. C.

G. BASTARD ET AL
SEWING MACHINE AND NEEDLE
Filed May 4, 1940

Serial No.
333,312
3 Sheets-Sheet 2

Fig. 9

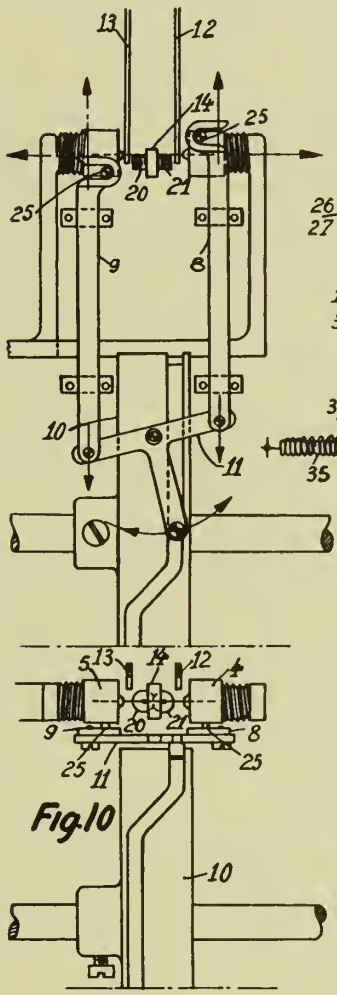

Fig. 10

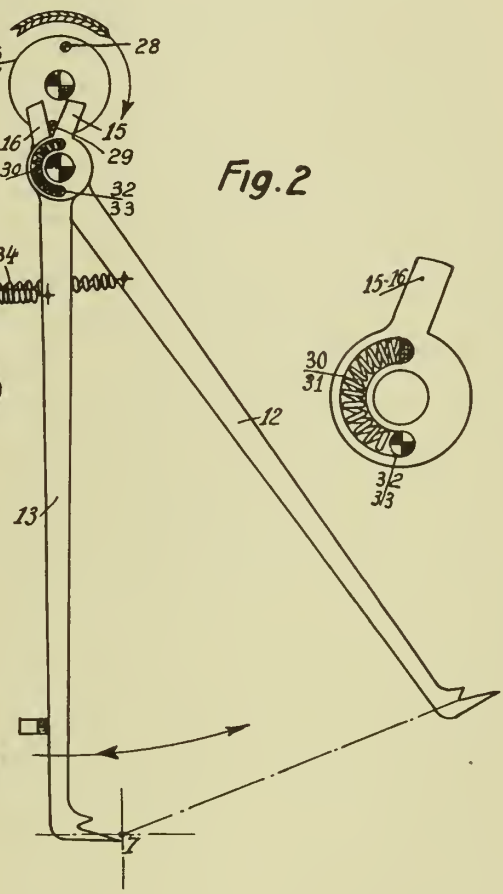

Fig. 2

Georges Bastard
Gaston Huguet
by P. Jequeneaux

PUBLISHED

MAY 11, 1943.

BY A. P. C.

G. BASTARD ET AL

SEWING MACHINE AND NEEDLE

Filed May 4, 1940

Serial No.

333,312

3 Sheets-Sheet 3

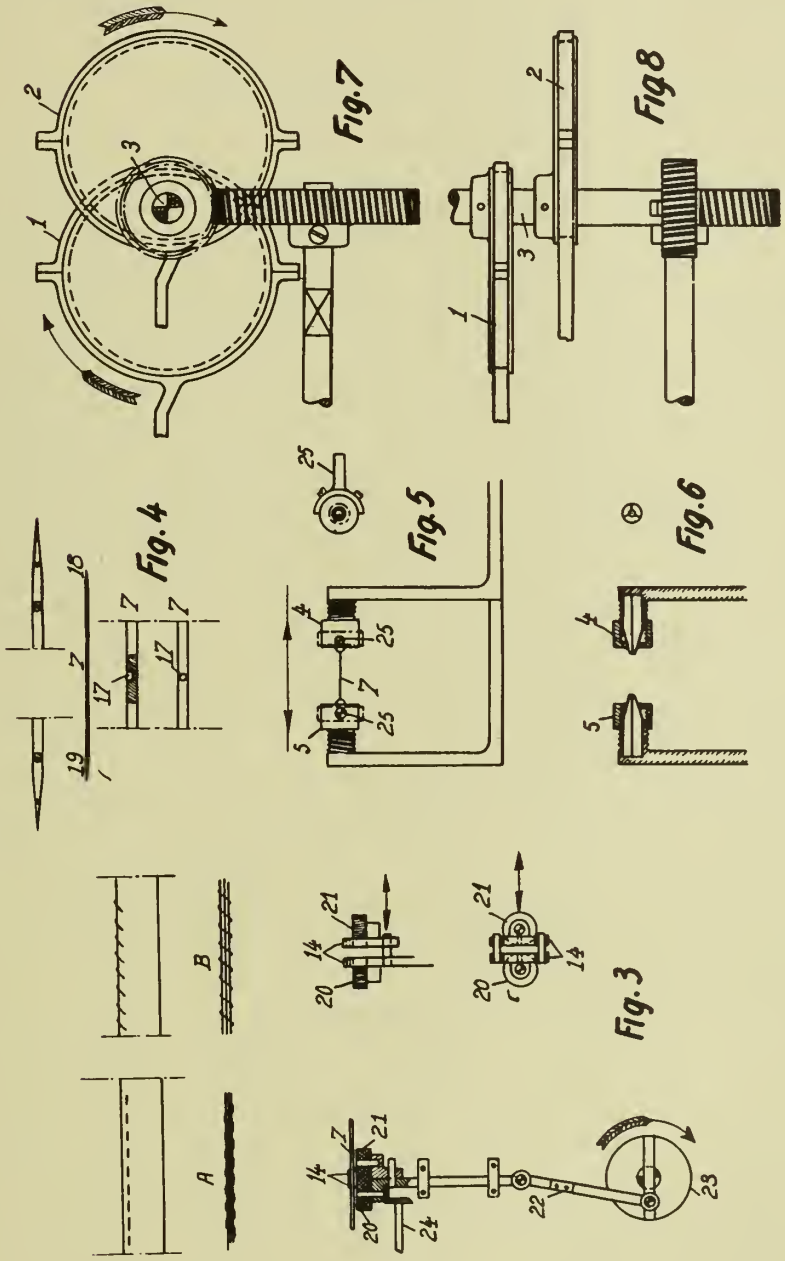

Published May 11, 1943 Serial No. 333,335

ALIEN PROPERTY CUSTODIAN

DEVICE FOR FILING DOCUMENTS

Raymond Arthur Eugéne Guichard, Paris, France; vested in the Alien Property Custodian

Application filed May 4, 1940

The present invention relates to a new filing device allowing the work to be easily and rapidly effected while necessitating the minimum of movements, either for placing a document in the rack or file, for removing it from the cabinet containing it or for refiling it, ensuring at the same time entire safety for placing the documents in position or refiling the racks or files.

This device is constituted by a combination which allows, if need be, of assembling the racks by connecting them to each other, while leaving them independent from each other, said combination being formed by means of elements some of which are known per se and others constitute novelties which will be described hereinafter, viz:

(*a*) Removable members serving as supports and guides for the racks and sliding on the parallel bars of a frame or tray.

(*b*) Racks or envelope-files made of cardboard in preference to any other material, hereinafter called "racks" provided with perforations for securing suspension rods or bars, one on each folio, and, if necessary, with two flaps.

(*c*) Rods or bars, preferably made of metal, the shape and height of which can be different, ensuring the suspension of the rack and the ends of which issue from said rack and rest on the removable members and extend slightly beyond the same for allowing the manipulations and the extraction of the rack to be effected.

(*d*) A frame or tray allowing the placing in position of the removable members and their sliding movement as well as the suspension of the racks.

The inscriptions on the rack are very visible because they can be held horizontally or semi-vertically by a fold of one of the suspension rods, said rack can be opened by simply moving back one of its folios according to its position in the cabinet, the documents contained in the rack can be retained at the rear by an inner flap provided in the rack; a new document can be rapidly placed in position, a single movement being sufficient for introducing it.

The manipulation and removal of a rack is very easy, the rods extending beyond the rack and the removable members being folded and curved at their ends, which allows of pushing it back or even of grasping it, using only one hand.

When removing a rack, the removable members mark the place of said rack, that is to say, an empty space remains in the cabinet. The use of said members does not allow a rack to be placed in the frame if said rack or another rack has not been removed previously, as, if a new rack is to be added to the cabinet, it is necessary to arrange at the desired place on either side of the frame, a new member adapted to support the suspension rods.

The removable members can be provided with a label bearing the title of the rack and the racks removed can thus be known.

The removable members can have different shapes, but it is advantageous that each pair, one on either side of the frame should maintain the rod of the rear folio of a rack and that of the front folio of the adjacent rack, so that a document cannot be introduced between two racks, which might take place if the racks were not connected to each other, that is to say, if the rods were held, for instance, by separate members.

Accordion-shaped arrangements have already been constructed, but these systems present serious difficulties.

A. When a new rack is to be interposed, it is necessary to disconnect the accordion, which necessitates the removal of the adjacent racks.

B. These racks present the inconvenience that they cannot be removed from the cabinet for filing and consulting the documents, use is consequently made of an intermediate file which can quite easily be placed in another rack: mathematically, nothing will cause this error to be noticed, in case of need, it will be necessary to search in all the racks to find the file placed in the wrong rack, laborious task when the cabinet comprises a few thousand racks.

C. When opening the rack, the file containing the documents tends, under the rearward movement, to come forwardly, it is therefore necessary to disengage it for placing a new one therein, which requires a supplementary movement.

D. Nothing allows to see whether the rack contains its documents or not.

The present invention remedies these inconveniences and includes other features which will be described and claimed hereinafter.

The invention will now be described with reference to the accompanying drawings given by way of example and which illustrate various forms of removable members, racks, rods and suspension frames devised according to the invention.

Figs. 1, 2, 3, 4, 5 and 6 illustrate various forms of removable members made of metal or moulded material which serve as support for the rods allowing the racks to be hung therefrom. Their dimensions can vary according to the importance of the racks. Their shape has been calculated so as to ensure their stability and to allow them to be easily placed in position and to slide on the

parts of the frame or tray adapted to support them.

The heel-pieces of the members shown in Figs. 1, 2, 3 and 5 and the screw of those in Figs. 4 and 6 are adapted to prevent them from overturning when the thrust is exerted for opening the rack.

Figs. 7, 8 and 9 illustrate the same members seen in section; those shown in 7 and 9 have a single recess receiving the notched end of one of the two suspension rods of the rack, if use is made of a movable member for each rod, or the rear rod of a rack and the front rod of the adjacent rack, if a folio of two racks is hung from the same member.

The member shown in Fig. 8 receives at the front in the first recess the rear rod of the rack and, in the second recess, the front rod of the adjacent rack.

Of course, in certain particular cases, by using plane or slightly curved suspension rods, both rods of a rack can be hung in the member of Figs. 7 and 9 or one rod in each recess of the member shown in Fig. 8.

The recess formed in said members is inclined (1 in Figs. 7, 8 and 9) so as to facilitate the introduction of the rods.

The bottom of the recess can be flat as in Figs. 7 and 9, or have another shape, for instance a ridge, as shown at 2 in Figs. 2 and 8.

It will be noted that the part connecting the heel-piece to the members shown in Figs. 1 to 5 is thinner than the member, as indicated at 3 in Figs. 7 and 8, in order to facilitate the placing in position of the members and the interposition of new members on the part or parts serving as support, as will be seen later on in Figs. 23 to 26.

Fig. 10 is a flat view of the rack; the parts 4, 5 and 5, 6 constituting the two folios are of different heights.

The line 4 and 6 of each folio also determines their height, line 5 being the bottom fold or lower back.

The parts shown at 7 and 8 form the flaps necessary for holding the suspension rods of Figs. 11 and 13.

The folds 4, 9, 10 and 11 of the flap 8 serve to conform to the shape of the profiled rod of Fig. 11 the detail of assemblage of which will be defined hereinafter, the part located between the lines 4 and 9 being adapted to bear the inscriptions or titles. This method of assemblage can be of any other type without departing thereby from the invention.

The crinkled lines indicated at 12 form the hinge of the large inner flap, however, this flap may not be used or may be shorter and comprise no hinge folds.

The perforations shown at 13 and 14 serve to assemble the rods of Figs. 11 and 12 to the rack, said perforations can be provided at 15 and 16 or otherwise, according as the securing claws of the rods are placed on one face or the other or on both faces.

These perforations can be provided in a more or less large number and preferably of rectangular shape, as indicated at 13, or in the shape of a half-circle, as shown at 15, or both as indicated at 14 and 16.

However, for obtaining the maximum strength, the row 17 of said perforations which forms the bearing point of the rods in the claws, will always be parallel to the folds 4 and 6.

The perforations located at 18 serve, once the rack is closed, to see if it contains documents.

The notches 19 allow, by engaging in the vertical claws of the rods, to ensure the locking of the whole assembly and to allow, in case of wear of the rack, the rods to be easily taken to pieces and recovered; the locking as well as the assemblage of the rods in the rack can also be effected by other means, such as hooks or metal eyelets.

Fig. 11 illustrates a suspension rod which fits in the flap 8 of the rack shown in Fig. 10, said rod, preferably made of steel is cut out at its ends; the notches 20 can have different shapes according to the profile of the recesses formed in the movable members, Figs. 7 and 8, so as to conform to the same and to thereby avoid any lateral play prejudicial to the alignment of the titles of the racks.

The claws 21 serve for securing the rack to the rod owing to the perforations 13 to 16 of Fig. 10; they can be provided in a more or less large number and on a single face or distributed on both faces; said claws can be placed at the lower edge of the rod, as shown in Fig. 13.

The claws 22 allow the rack to be locked in the notches 19 and prevent the rod from becoming detached.

This rod can be higher than that shown in Fig. 13 in order to allow the portion 23 which is folded and forms the support or small back of the rack placed between the lines 4 and 9 of Fig. 10, to engage above the other folio of the rack, as will be shown later on.

Fig. 12 is a sectional view of the rod of Fig. 11.

Fig. 13 shows a rod fitting in the flap 7 of the rack shown in Fig. 10; said rod has the same features as those shown in Fig. 11, but can be less high, the cut-away portions 23 can be provided at the lower edge instead of being made in the body as in Fig. 11.

Fig. 14 is a sectional view of Fig. 13; it will be noted that the position of the horizontal claws 21 and vertical claws 22 can be reversed relatively to Fig. 12.

Fig. 15 is a plan view of the rods of Figs. 11 and 13. It will be noted that the claws 21 are embossed on both faces of the rod.

The portion 24 constituting the ends is curved or folded so as to allow the rack to be removed or opened easily, as will be shown later on.

Figs. 16 to 21 show in section various embodiments for ensuring the support and sliding of the movable members shown in Figs. 1 to 6. These bars or angle members are assembled on either side of an armature forming a support per pair, if use is made of bars as those shown in Figs. 16 and 20, or for each one, if use is made of the various angle members shown in Figs. 17, 18, 19 and 21.

Fig. 22 shows the bars of Fig. 16 assembled per pair on either side of supporting legs, as well as a movable member of Fig. 1 placed in position.

Figs. 23 and 24 illustrate in section the introduction of the movable members of Figs. 1 and 2 between the bars and the profile of Figs. 16 and 17 constituting the means for ensuring the support and sliding of said members.

Figs. 25 and 26 show the member placed in position, it is therefore necessary to cause it to effect a quarter of a revolution after its introduction.

It will now be understood that it is necessary to use members having a stem 3 shown in Figs. 7 and 8 as thin as possible, otherwise it will be impossible to obtain such an assemblage, allowing the easy introduction of the members and in particular, the addition of new members among

the others without it being necessary to introduce them only at one end of the tray or frame, this requiring its taking to pieces and the changing of the position of all the racks when one or more are to be interposed.

Fig. 27 shows a member of the same shape as that of Figs. 1 and 7, but the stem or heel-piece **3** of which has not been reduced in depth so as to show that it is impossible to cause it to enter the profile of Figs. 16, 17 and 20, for instance.

Fig. 28 shows that said member, seen at the other edge, can only be placed in position through the end of the bars or profiled members of Figs. 16 to 20, that is to say, it would be necessary to take the whole device to pieces to introduce new members.

Alone the members shown in Figs. 4 and 6 (side view Fig. 9) can, whilst having a stem or heel-piece of the same depth as the member itself, be easily interposed: the member of Fig. 6 on the supporting angle bar of Fig. 21, and this owing to the locking screw **25** with which it is provided, but its stability is less and its cost price higher; as will be seen in Figs. 29 and 30, the member of Fig. 4, will necessitate, after its introduction, the placing in position of a screw or a pin, which is not very practical especially when the drawer of the cabinet is placed near the ground or when its edges extend beyond the top of the racks.

Fig. 31 shows the securing in position of the rack shown in Fig. 10 to the rod illustrated in Fig. 11; the points **4**, **9**, **10** and **11** correspond to the same tracing or folding lines of Fig. 10, as above indicated, thus, the back bearing the title is clearly visible and efficiently supported by the folded part of the rod or bar.

At **21** and **22**, the horizontal and vertical claws of the rod shown in Fig. 11 are placed in the perforations **15** and notches **19** of the rack shown in Fig. 10; the securing in position is reinforced at **26** by stitching; the flap of Fig. 10 is shown at **8** with its crinkled lines.

Fig. 32 shows in section the assemblage of the two rods of Figs. 11 and 13 to the rack **10**.

It will be noted that the rod of Fig. 13 is not so high as that of Fig. 11, so as to engage under the folded part **23**, in order to form less thickness and allow, when the racks do not contain a volume of papers exceeding the width of the folded part **23**, to place a larger number thereof in the cabinets.

The rod shown in Fig. 13 is not provided with a vertical claw at its ends, which is optional and is not prejudicial in any way to the firmness of the structure.

Fig. 33 shows the utilisation of the inner flap **8** of the rack shown in Fig. 10. When the rack is opened, either by pushing back its rear folio or advancing the front folio, according to its position in the cabinet, the documents are held in position and cannot fall forwardly, which would hinder the introduction of another document and would cause loss of time, when the filing is effected chronologically.

Fig. 34 is a perspective view of the assemblage of a few racks or files on the movable members of Figs. 1 to 6. It will be noted that for this example, use is made of the accordion principle, each member locks the rear and front suspension rods of the preceding rack and the following rack, except, of course, for the first and the last, but for these two racks, use can be made of thinner movable members.

The rack Duval is pushed back, its front folio remains attached to the rear folio of the rack Dussar, it is therefore impossible to place a document between both racks.

Fig. 35 shows that it is easy to extract a rack, even with a finger, owing to the folding of the rods and that it is impossible to place a file in the rack unless it has been taken out therefrom or another one removed, as one cannot be interposed between two others unless a new member is placed at the required spot on either side of the frame, after having separated the front and rear folios of the preceding and following files, the rods of which are replaced in position afterwards; it will be noted that it is only necessary to push with a finger the curved part of the rods to effect the opening.

Fig. 36 is a section of Fig. 35, it will be seen that it is easy to effect the introduction of a rack which has been taken out, its place remains free, its own weight being sufficient for ensuring its correct placing in position.

Fig. 37 illustrates a label-carrier adapted to bear the title of the corresponding rack, so that its identity can be known when said rack has been removed from the cabinet; this label-carrier, preferably made of plastic material, is folded at right angles at about 4/5 of its height, at its longest part, its edges are folded back in U shape slightly closed, for allowing the label to slide and to be held therein, its short part has an opening **26** at the end then a larger open portion **27**, so as to allow it to be hooked on the stem connecting the movable member to its heel-piece. Said member can also be held by means of the screw or pin, if use is made of the members of Figs. 4 or 6.

At the top of the longest part, a perforation **28**, having the shape of the end of the heel-piece subsequently engaged therein, is provided, so as to prevent the label-carrier from rocking to the right or to the left.

Fig. 38 shows a label-carrier of Fig. 37 mounted on a movable member.

Fig. 39 shows how the ends of the bars or rods of Figs. 16 or 20 are cut out in order to be assembled with the legs to form the frame without necessitating screws or nuts.

Fig. 40 illustrates the end **29** of the leg shown in Fig. 22 which has been perforated for allowing the passage and the straightening of the bars of Fig. 39, and provided with two claws **30** for allowing a member in the shape of a comb to be secured in position.

Fig. 41 shows said member serving to hold the two bars of Fig. 39; its engagement in the two claws is adapted not only to maintain and also to ensure the rigorous spacing apart of both bars shown in Fig. 39, but also that of both pairs of bars.

Fig. 42 illustrates a sectional view of the assemblage.

RAYMOND ARTHUR EUGÉNE GUICHARD.

PUBLISHED
MAY 11, 1943.
BY A. P. C.

R. A. E. GUICHARD
DEVICE FOR FILING DOCUMENTS
Filed May 4, 1940

Serial No.
333,335
2 Sheets-Sheet 1

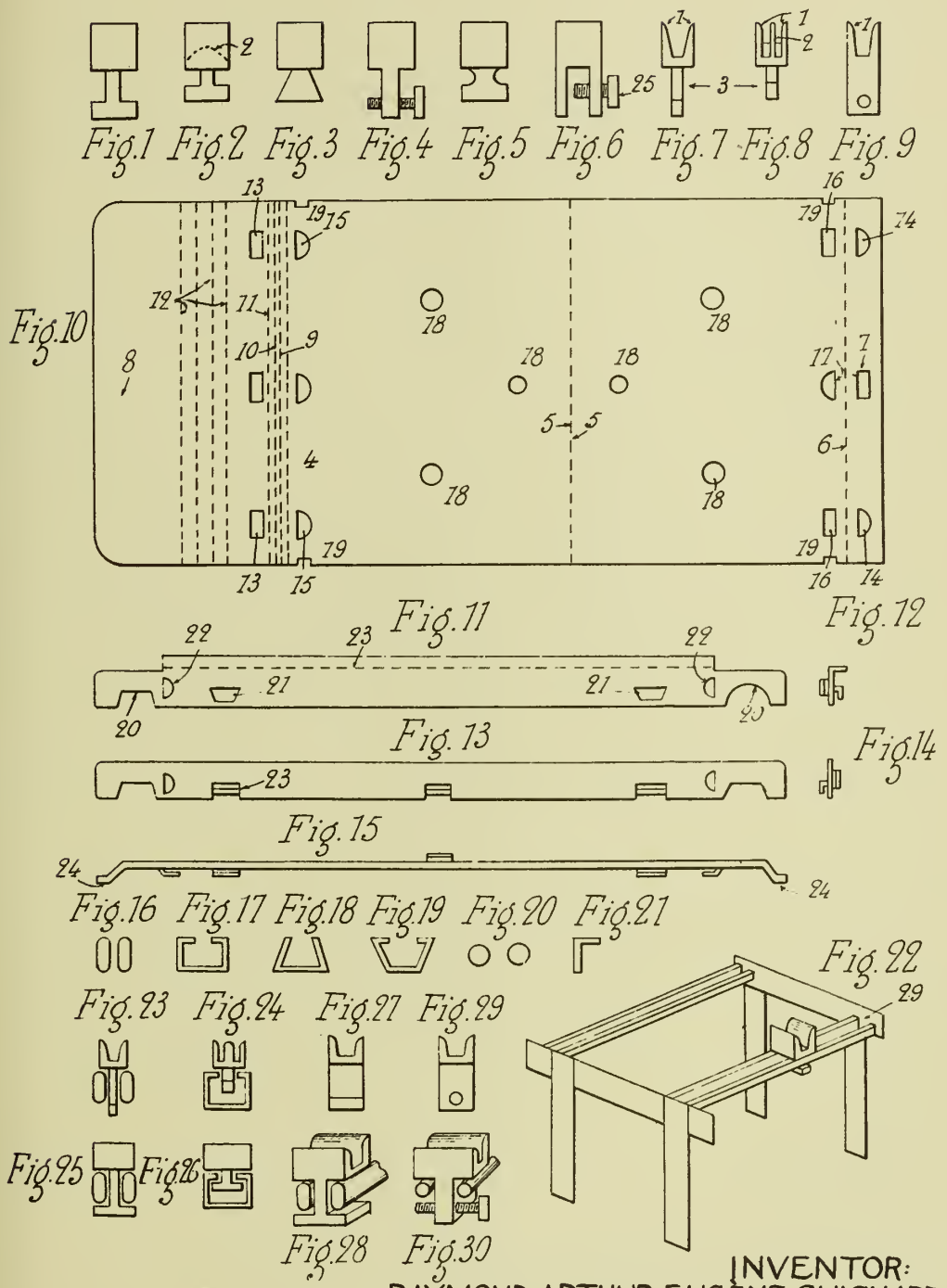

INVENTOR:
RAYMOND ARTHUR EUGENE GUICHARD
BY Haseltine Lake & Co. ATTORNEYS

PUBLISHED
MAY 11, 1943.
BY A. P. C.

R. A. E. GUICHARD
DEVICE FOR FILING DOCUMENTS
Filed May 4, 1940

Serial No.
333,335
2 Sheets-Sheet 2

Fig. 31

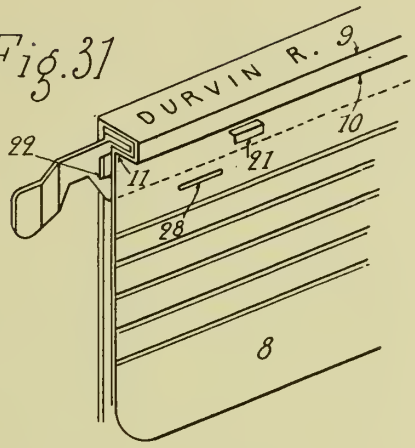

Fig. 34

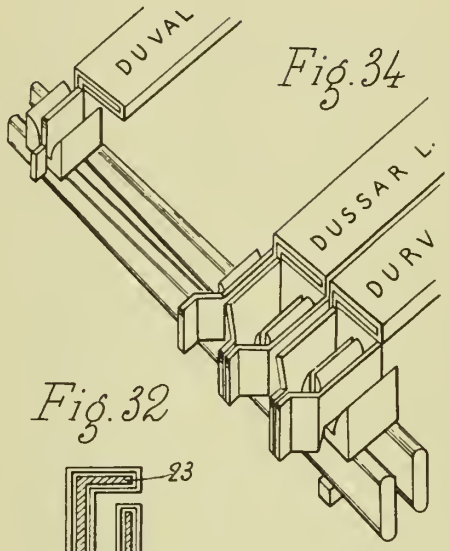

Fig. 32

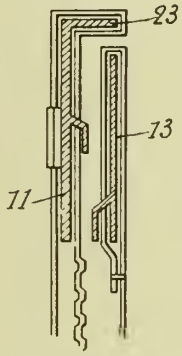

Fig. 35

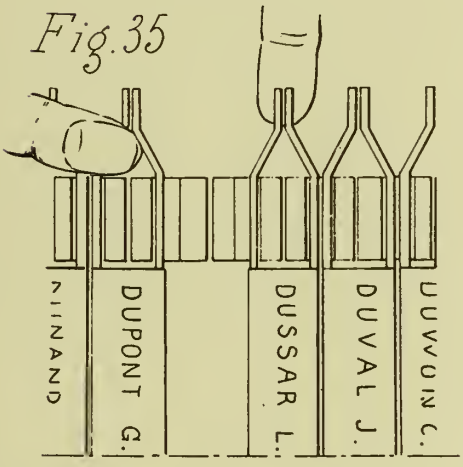

Fig. 33

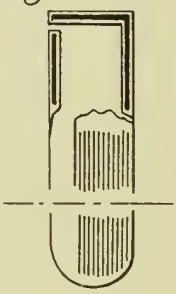

Fig. 38

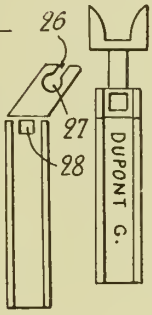

Fig. 36

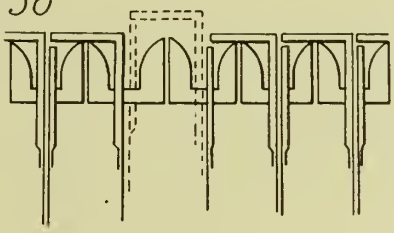

Fig. 39

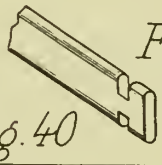

Fig. 40

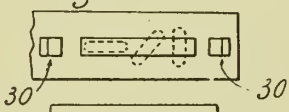

Fig. 37

Fig. 41

Fig. 42

INVENTOR:
RAYMOND ARTHUR EUGÈNE GUICHARD
BY Haseltine, Lake & Co.
ATTORNEYS

Published May 11, 1943

Serial No. 333,562

ALIEN PROPERTY CUSTODIAN

EDGE ORNAMENTATION FOR FABRICS

Frederick Lutz, Stuttgart -W., Wuerttemberg, Germany; vested in the Alien Property Custodian

Application filed May 6, 1940

This invention relates to edge ornamentation for fabrics and also to methods of producing such ornamentation, the present application being a division of a copending patent application Serial No. 293,903, filed by me on September 8, 1939.

My present invention has for its aims the provision of an ornamental edging in which spaced projecting figures simulative of sunbursts with radiating digits, are formed by a continuous succession of chain stitches; and to evolve a simple method whereby such ornamentation can be produced.

In the drawings, Fig. I is a view showing one type of my improved fabric edge ornamentation on an enlarged scale.

Fig. II is a view similar to Fig. I, showing a modification.

Fig. III is a fragmentary diagrammatic view in plan of the sewing machine with the aid of which the ornamentation can be produced; and

Fig. IV is a fragmentary view in section taken as indicated by the angled arrows IV—IV in Fig. III.

Referring first to Fig. I of these illustrations, the ornamental edging of my invention there shown, is characterized by spaced serially-connected figures M each simulating a sunburst or palm leaf with radially-extending digits L, L′ and L^2 anchored at a common point P immediately inward of the edge E of the fabric designated F. Each digit is in the form of a flat, substantially-closed loop composed of a succession of chain stitches **110**, **111**, **112**, **113**, **114**, and **115**, the ornamentation being formed, in this instance, from two threads T and T′ whereof one is stippled for convenience of distinction from the other. It is to be particularly noted that the two threads are continuous, and that the first and last loops **110** and **115** respectively of each digit penetrate the fabric F at the common point P to which reference was made above. The connections C between the sunburst figures M are likewise composed of a succession of chain loops **117**, **118**, **119**, **120**, **121** and **122**, and are of a length in excess of the spacing of said figures, and take on the appearance of obtuse angle projections beyond the fabric edge E, the component segments or arms of each such angle projection radiating, like the digits from the free or center points P of contiguous figures. In the example shown, each figure M has three digits; and each digit L, L′ and L^2 and each connecting portion C is composed of the same number of chain stitches. This uniformity is, however, not necessarily essential to my invention since variations are possible within the scope of the appended claims both with regard to the number of stitches in individual digits and in the connections, as well as with regard to the number of digits in each figure.

In forming the edging, the initial stitch **110** of the first digit L of a figure M is formed through the fabric at the point P, whereupon the succeeding free chain stitches **111**, **112**, **113** and **114** are made beyond the fabric edge E, and a final stitch **115** formed through the same point P in the fabric, with resultant completion of said first digit. The second and third digits L′ and L^2 are formed in precisely the same way, whereupon the initial stitch **117** for a connecting portion C is formed through the point P and succeeded by four free stitches **118**, **119**, **120** and **121** beyond the fabric edge E. The final stitch **122** of the connecting portion C, instead of being run through the point P, however, is passed through a point P further along the fabric edge for the start of a succeeding design figure. Repetitions of this cycle obviously result in the formation of the edging along the entire edge of the fabric.

The fabric of Fig. I can be produced with a sewing machine having, as shown in Figs. III and IV, a needle **7** which is operated from above a work support **16** and carries the thread T, and a looper **66** which cooperates with the needle below the work support in forming the chain stitches and carries the thread T′. The needle **7** is guided for up and down movement in an arm **5** which is fulcrumed to swing horizontally about a fulcrum **4**. By means of a connection conventionally indicated at **17** including a roller **22**, the arm **5** is controlled from a drum **25** whereof the circumferential surface is shown as developed in a flat plane in Fig. III, said cam making a complete rotation during the formation of each figure M and each connection C of the ornamentation. The meandering groove **23** of the cam **25** is stepped as at **23***a*, **23***b*, **23***c*, **23***d*, **23***e*, and **23***f* to move the arm **5** back and forth with determination of dwells for the needle **7** in successive positions **7***a*, **7***b*, **7***c*, **7***d*, **7***c*, **7***b* during the formation of each figure M and each connection C. Within the hold **82** in the work support **16** through which the needle **7** passes, are curved tongues **83**, **84** and **85** which extend in the direction of feeding (indicated by the arrow) and over which the digit loops L, L′ and L^2 are formed as conventionally shown in Fig. III. The feed dog of the machine indicated at **37** in Fig. IV operates to advance the fabric F on the work support by

a distance corresponding to the spacing of the figures M between the points P of Fig. I.

The formation of the ornamentation by the machine is as follows:

Assuming the fabric F to be stationary and the needle 7 in the position 7*a* in Fig. III which is determined by the step 23*a* of the cam 25, see Fig. III. In making its first reciprocation, the needle 7 passes through the fabric F immediately inward of the edge E, and, as a consequence of its coaction with the looper 66, the stitch 110 is formed. As the cam 25 rotates in the direction of the arrow in Fig. III, the needle is moved laterally to the position 7*b* by the step 23*b* of said cam, and in making its succeeding reciprocation passes down through the interval between the fingers 83, 84 beyond the edge of the fabric, with the result that the stitch 110 is completed over the finger 83 and a new stitch 111 is formed. As the cam 25 rotates further, the needle is brought to the position 7*c* by the step 23*c* and reciprocated in the interval between the fingers 84, 85 with completion of the stitch 111 over the finger 84 and the formation of another new stitch 112. Upon further movement of the cam 25, the needle is brought to the position 7*d* by the step 23*d* and is reciprocated beyond the finger 85 with attendant completion of the stitch 112 over said finger and the formation of another new stitch 113. During the completion of the instant rotation of the cam 25, the direction of lateral needle shifting is reversed as the roller 22 successively passes through the step 23*e* (which corresponds to step 23*c*) and the step 23*f* (which corresponds to step 23*b*) and finally re-enters the step 23*a*, with attendant positioning of the needle successively in the positions 7*c*, 7*b* and 7*a* and formation of the stitches 113, 114 and 115 over the fingers 85, 84 and 83. In this excursion of the needle, the first loop L of six chain stitches is formed whereof the initial and last stitches 110 and 115 pass through the fabric at the same point P. By two more needle excursions in precisely the same manner, with the fabric F still stationary, the second and third loops L′ and L^2 are formed, with the initial and last stitches of each likewise passing through the fabric at the same point as the first and last stitches of the first loop L. Due to the complemental curving of the stitch fingers 83—85 and taking up on the needle and looper threads T, T′ incident to stitch formation, the chain stitch loops L, L′ and L^2 are caused to shift toward the edge of the fabric as shown in Fig. III, but are detained by the reversely curved ends of the fingers 84, 85. As a consequence of this control, it will be seen that the individuality of the loops L—L^2 is maintained. During the next rotation of the cam 25 after completion of the three loops L—L^2, a chain C of six stitches 117, 118, 119, 120, 121 and 122 is produced. However, just before the formation of the last stitch 122 of this chain C, the fabric F is shifted by the feed dog 37, so that the said last stitch 122 is caused to penetrate the fabric at a point further along the edge of the latter, with the intermediate loops of the chain entirely free of the fabric edge. By the shift of the fabric F as just explained, the loops L—L^2 are pulled off and away from the stitch fingers 83—85. Upon release, the flat loops L—L^2 constituting the unit figure M of the ornamentation take radial positions relative to the point P at which the fabric is penetrated by the needle, and thus create the sunburst effect.

The throw of the feed dog 37 is preferably so adjusted as to determine breaking of each chain C at the middle with its two segments extending radially to the centers of the two adjacent figures M which it connects.

The modified type of my improved edge ornamentation shown in Fig. II is like the first described, except for being formed from a single thread. The modified edging can be produced with the machine above described by use of a spreader instead of a looper in connection with means in a manner which will be readily understood by those skilled in the sewing art.

FREDERICK LUTZ.

PUBLISHED

MAY 11, 1943.

BY A. P. C.

F. LUTZ

EDGE ORNAMENTATION FOR FABRICS

Filed May 6, 1940

Serial No. 333,562

2 Sheets-Sheet 1

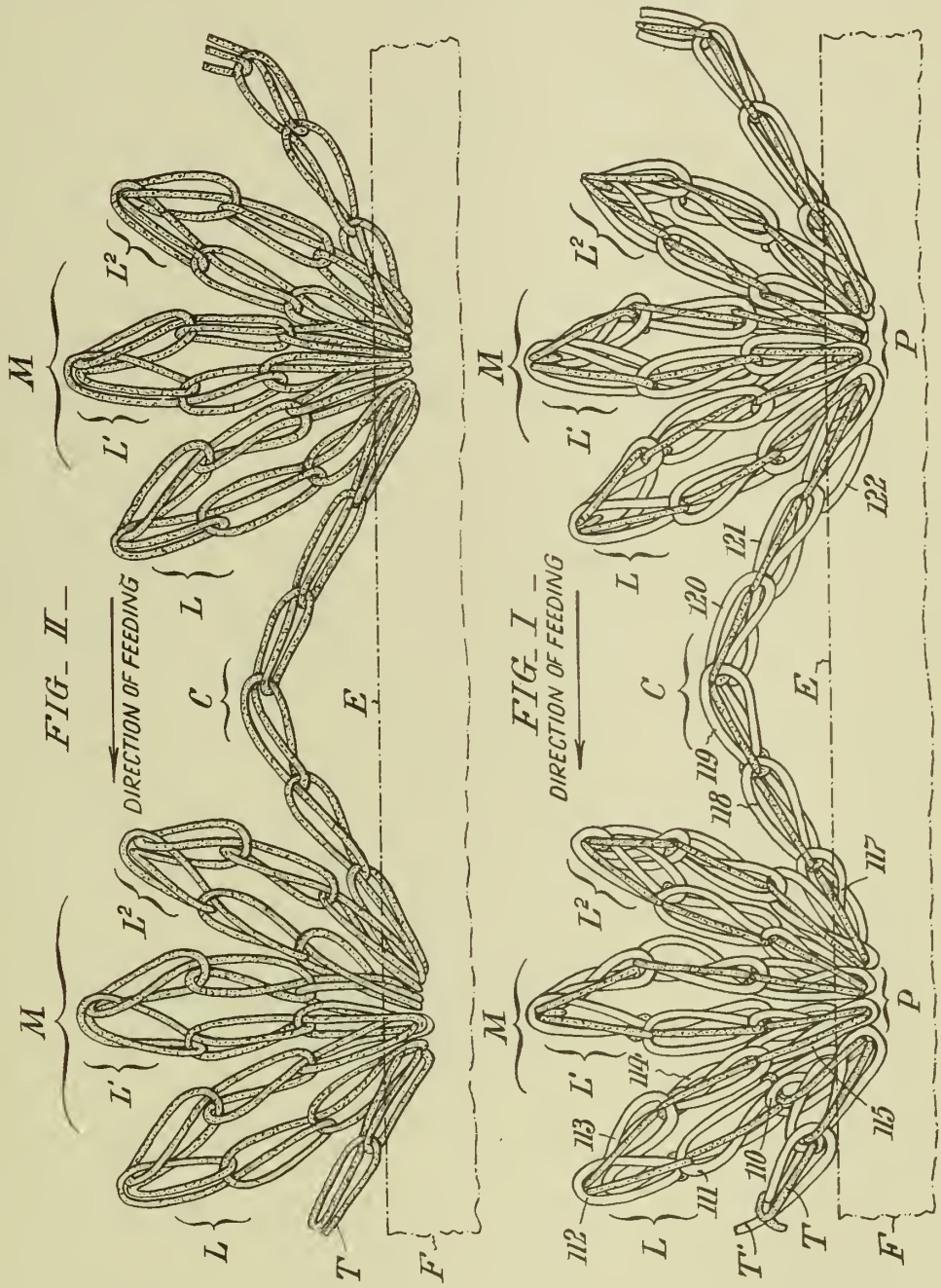

WITNESSES:
Hubert Fuchs
William Bell, Jr.

INVENTOR:
Frederick Lutz,
BY Paul & Paul
ATTORNEYS.

PUBLISHED
MAY 11, 1943.
BY A. P. C.

F. LUTZ
EDGE ORNAMENTATION FOR FABRICS
Filed May 6, 1940

Serial No.
333,562
2 Sheets-Sheet 2

FIG. III.

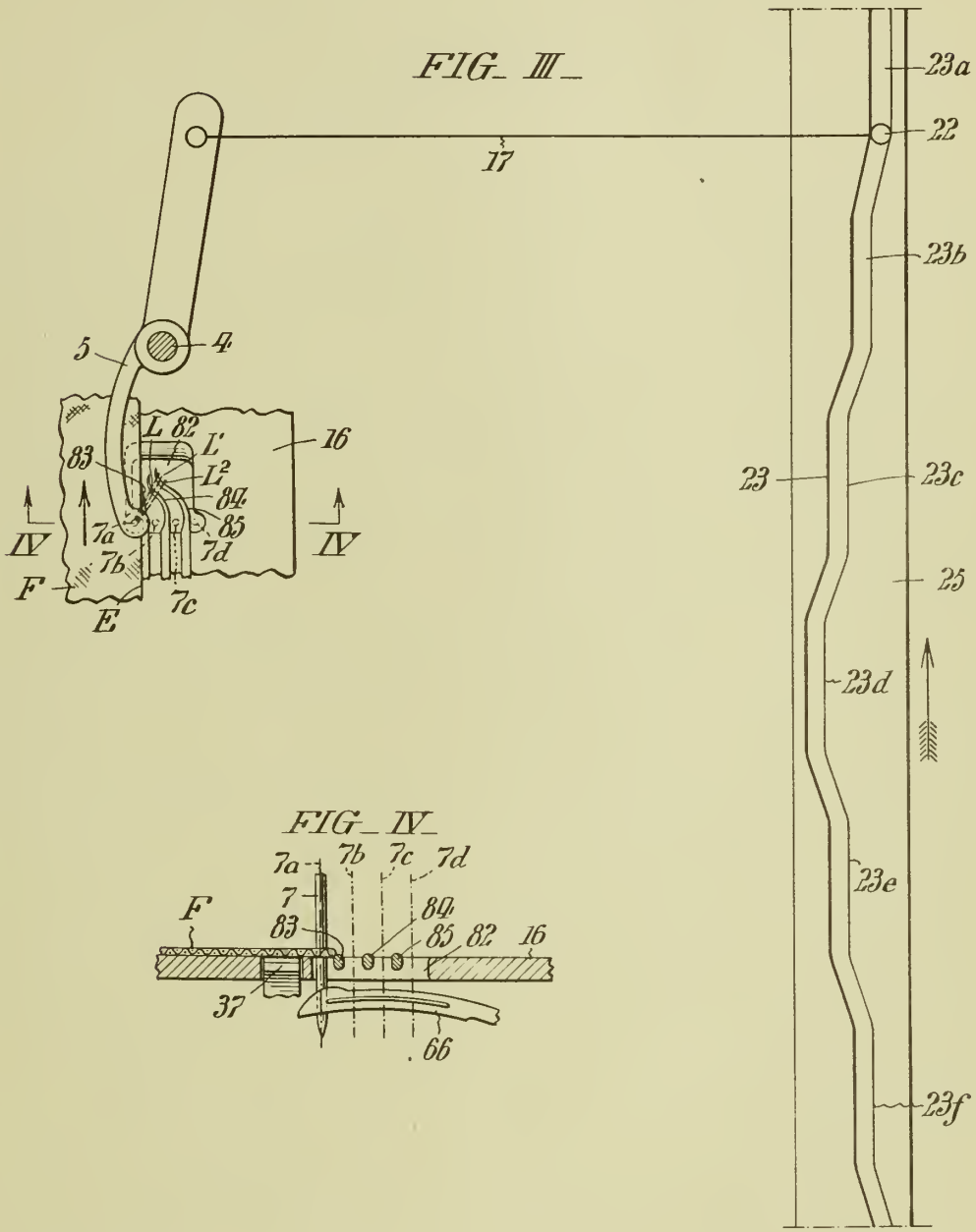

FIG. IV.

WITNESSES:
Hubert Fuchs
William Bell, Jr.

INVENTOR:
Frederick Lutz,
BY Paul & Paul
ATTORNEYS.

Published May 11, 1943

Serial No. 333,593

ALIEN PROPERTY CUSTODIAN

COMPOSITE PAINT AND THE METHOD OF MANUFACTURING THE SAME

Albert François Xavier Ferdinand Alphonse Claessens, Hove, Belgium; vested in the Alien Property Custodian

No Drawing. Application filed May 6, 1940

The present invention consists in a new composite paint formed by at least two constituents, each of which is a paint or a varnish and which are capable of separating from each other, such separation being effected at least partially after the paint has been applied and spread upon a convenient surface.

According to the invention, the constituents used should be incompatible with each other or only compatible at a small degree, but they would be however miscible in massive quantities, such constituents being incorporated in the composite paint in the form of coarse mixtures. The invention relates also to a method of producing this new paint, as also to the different methods of working and embodiment which will be described hereafter.

Two paints will be considered as having little or no compatibility with each other when, after they have been mixed coarsely (thus without being emulsified for instance), they will separate from each other at least partially when they are spread in thin layers.

This incompatibility may result from different physical factors, for instance different wetting capacity, different specific weight, different dispersive and cohesive capacities, different surface tension, and the like.

By "miscible in masses" must be understood that when it is proceeded to a coarse mixing of the two constituents and the latter be present in massive quantity, and not in the form of a thin layer, the mixture would be sufficiently stable for permitting the industrial use thereof in spite of the incompatibility of the constituents. The stability of the complete product is generally secured mainly by the viscosity of the mass or of its constituents, so as to prevent a too rapid separation of the mass. The factor of viscosity is however losing its preponderating importance in the mixture when the product is spread in thin layers. The relative stability of the mixture may however also result from or being enhanced by other factors, such as for instance the addition of a known volatile solvent.

By "coarse mixture" must be understood that the mixture is essentially constituted with small quantities of each of the constituents which have wholly kept their individuality with almost always a small proportion of parts comprising a more intimate mixture of the constituents.

The way in which the constituents of the paints will separate from each other, after application upon a surface, depends from the nature of the physical phenomenons which cause the incompatibility of the constituents and, in a relative degree, from the nature of the surface upon which the paint is applied and from different other causes as will be explained by the following examples.

1. Taking for instance a composite paint according to the invention, formed with two constituents A and B, and in which the constituent A is a red minium paint and at the constituent B an enamel lacquer of resin in alcohol having a silver tint, and in which may be eventually incorporated fillers of specific quality having particularly waterproofing, fungicide and like characteristics. By coarsely mixing the two constituents, a composite paint is produced which will have a determined stability owing to its own viscosity; however, this stability may be increased by the addition of a common volatile solvent, for instance benzene.

When this composite paint is spread in relatively thin layers upon a convenient surface, such as for instance the iron of metallic structures, ships' hulls and the like, while avoiding any emulsifying of the paint (for instance by pouring out the paint), the volatile solvent will be rapidly evaporated and the capacity of viscosity will lose its preponderating importance, so that the physical factors, which make both constituents incompatible, may produce their effect. The constituent A (minium paint) has great spreading, wetting and adhesive capacities upon iron. It will become stretched in a uniform layer over the whole surface of the iron. The constituent B has a considerable adhesive capacity with relation to constituent A and will become spread in a uniform layer upon the product A. In this way, by one single operation and by one single application, it is produced a rust preventing layer with a minium base, upon which is superposed a layer of paint forming protection for the minium. Generally moreover, the two layers will be separated from each other by a third layer formed by a more or less intimate mixture of the constituents.

2. When the constituent A of the coarse mixture is an aqueous paint of resin, tinted for instance in yellow by convenient pigments and when the constituent B is an oil paint formed for instance with a blue pigment and when such composite paint is applied by means of a brush upon the surface of an article to be ornamented, the following phenomenons will occur. It must be firstly noticed that both constituents are not wholly incompatible in the meaning given herebefore to this expression.

The blue oil paint spreads in a thin bottom layer upon the article, owing to its higher capacities of dispersion and adhesion, and mainly to its wetting capacity, whereas the yellow resin solution, having a high surface tension and reduced adhesive and binding capacities, will have a tendency to shrink upon the oily film and to form accumulations forming plastic reliefs. It occurs furthermore a determined interpenetration of one of the constituents into the film of the other, an effect from which may be made profit in practice.

It will thus be obtained after drying an ornamenting effect of relief type. This relief effect may be increased and a decorative appearance may be also improved by the presence of a dominant coloration according to constituent A at the retracted parts and of a dominant coloration according to constituent B at the relief shaped parts or also by obtaining the transitory tint indicated herebefore. The ornamental effect may be also enhanced by uncovering the upper layer of the relief shaped parts by a slight scraping or frictioning.

The separation process may moreover be influenced by numerous other factors. The way in which the product is applied by the operator may be of great influence. In the example of the blue oil paint mentioned herebefore, the operator may produce a more or less marked emulsion by frictioning the brush containing the composite paint more or less energetically over the surface to be ornamented, so that a more or less considerable proportion of constituents will not separate, and such constituents will also be more or less spread, so that therefrom results that the operator is in position to improve the ornamental effect according to its personal skill and by producing variable tints due to the emulsified portions.

In the case of the minium paint, an energetical application by means of a brush would produce a strong emulsion and subsequently prevent the separation in superposed layers.

This paint product will find its application in numerous cases, namely in ornament of painting and in determined conditions for painting metallic articles, which want to be covered with two superposed paint layers.

It is obvious that such paint may be constituted according to a great number of compositions. The compositions mentioned hereafter are only given by way of examples and without any restrictive intention.

Examples

(1.) It is prepared, on the one hand, a solution of 100 parts by weight of Carnauba wax in 300 parts of benzene for preparing lacquers; thereto is added 90 parts of umber, and, on the other hand, a solution of 15 parts of shellac in 15 parts of alcohol at 95°, which are thoroughly mixed and to which is added, under stirring, 20 parts of antimony oxide suspended in 17 parts of water and 24 parts of alcohol. 16 parts of the first mass is now mixed with 14 parts of the second mass and this produces a mixture which can be easily shaken and which produces a covering layer with relief effect after application and light spreading by means of a brush.

(2.) 40 parts by weight of colophany resin are dissolved in 10 parts of ammonia at 22° Be. and 440 parts of water, solution to which is added 100 parts of lithopone. To 12 parts of this solution is then added, under stirring, 8 parts of concentrate cellulosic lacquer. After application with a brush and drying, a multicoloured plastic covering is obtained.

(3.) To a minium paint composed with 82 parts of lead minium, 15 parts of standoil and 3 parts of an aliphatic hydrocarbon is added an aluminium paint composed with 25 parts of synthetic resin, 15 parts of aluminum powder and 60 parts of methyl or ethyl alcohol, the whole being slightly stirred. By application with a brush in layers of convenient thickness, there is rapidly formed two layers of different composition, each of the two films complying with a specific technical purpose.

(4.) In a general manner, an oily paint could be mixed with an alcohol or a water paint.

The oil paint may be formed with 80 parts of powdered pigments and 20 parts of synthetic drying oil with 40 parts of petroleum. A second constituent is composed with 20 parts of shellack and 80 parts of alcohol at 93° or 20 parts of shellack dissolved in 75 parts of water and 5 parts of a basic salt, in which are introduced 150 parts of a pigment of different tint. The two paints are mixed in the proportion of 1 to 2.

ALBERT FRANÇOIS XAVIER
FERDINAND ALPHONSE CLAESSENS.

Published May 11, 1943

Serial No. 334,095

ALIEN PROPERTY CUSTODIAN

FRICTION MATERIAL

Ernst Doetsch, Nurnberg, Germany; vested in the Alien Property Custodian

No Drawing. Application filed May 8, 1940

This invention relates to a friction material of the type used for friction brakes and friction couplings.

As is well known brake blocks of metal, for example, of cast iron, do not have a sufficient braking effect at very high speeds.

On the other hand brake blocks of resilient non-metallic material, for example, synthetic substances on artificial resin basis, leather, rubber and the like, whose braking effect is not reduced so much with increased speed as that of metallic brake blocks, have the severe drawback that they are burnt or otherwise destroyed by the very high temperatures produced in the brake lining by the friction. I have found that brake linings of the said resilient materials are not satisfactory for high speed or high duty service.

It has been proposed already to make brake blocks, brake linings, coupling linings and clutch facings of artificial carbon material. This material offers the advantage that its coefficient of friction is not reduced with increasing speed as it is the case with brake linings of metal. Also the high resistance of the material to heat is highly desirable for the reasons above stated.

It will be understood that the artificial carbon material which has undergone a heat treatment at temperatures of 1000–1500° C. in its production is capable of standing very high temperatures in its use.

It has also been suggested already to admix mineral substances in the production of the carbon material in order to increase its friction. However, if such admixtures are added in quantities having the desired effect in respect to the braking characteristics of the material the strength of the artificial carbon material and its heat conductivity are affected. On the other hand, the mechanical strength is very essential for the use of the artificial carbon material in brake blocks and a relatively high heat conductivity is also required to lead off the heat which is developed in the braking action.

It is the object of the present invention to provide an artificial carbon material having high mechanical strength, high braking effect and high heat-conductivity characteristics.

With these objects in view, I incorporate metal material in the plastic carbon mass which is then compressed and finally annealed at the temperatures used in the manufacture of artificial carbon material, for solidification.

The shape, size and quantity of the metal embedded in the carbon mass depends upon the special use for which the material is intended to be put. For example, steel turnings or chips of a very fine condition or, on the other hand, turnings having a thickness of several millimeters may be used. Also metal chips from planing, filing or sawing work may be used and different sizes or mixtures of different sizes and qualities may be used. Further, metal texture, metal netting, metal cords and strings or ribbons may be embedded in the plastic mass. I have found that such metal admixtures form a very intimate joint with the ceramic carbon material in the annealing operation.

My novel friction material when used for brake linings and the like, offers various advantages.

1. The braking properties of carbon and metal are combined. Owing to the different hardness of the two combined materials a surface polish is prevented which would reduce the braking effect at high speed. Mutual seizing or grinding of the associated active frictional surfaces of the brake block and on the brake drum is avoided.

2. The heat conductivity of the material is greatly increased by the metal admixtures. Heat is led off much more efficiently than by homogeneous artificial carbon material. The embedded metal pieces felt together and impart to the material an extremely solid and elastic structure. The metal pieces weld and melt together in the annealing operation whereby a metal skeleton is formed which is completely embedded in the carbon body. Sealing or bursting off of any parts of the brake lining is no more possible and the combined iron-carbon body is not liable to breakage.

The method and apparatus of the present invention have been described in detail with reference to specific embodiments. It is to be understood, however, that the invention is not limited by such specific reference but is broader in scope and capable of other embodiments than those specifically described.

ERNST DOETSCH.

Published May 11, 1943

Serial No. 334,902

ALIEN PROPERTY CUSTODIAN

MORTAR-LIKE CONSTRUCTION MATERIAL

Hans Jaruschka, Vienna, Austria; vested in the Alien Property Custodian

No Drawing. Application filed May 13, 1940

The present invention relates to a new mortar for constructing walls, stone-work, brick-work and the like.

It has been proposed in my co-pending application Ser. No. 184,800, of which the present application is a continuation in part, to use a bitumen mortar consisting of sand and bitumen emulsion as binding element for constructing walls. The particular advantage of this method of wall construction resides in the fact that the emulsion water is liberated when the emulsion is broken up and is absorbed by the bricks and quickly evaporated so that a building constructed of walls according to this new method can be used much earlier than a building in the construction of which lime or cement mortar is used, which last mentioned mortars, because of their slow setting process, require many months for drying.

An object of the present invention is to provide a new mortar for constructing brick work which mortar consists of a mixture of sand and bitumen emulsion whereby, if the mortar particularly with respect to the addition of the bitumen emulsion to the sand is produced according to the present invention, the strength of the mortar of the type set forth and thereby the constructions in which said mortar is used is extraordinarily greater than that of conventional mortars.

It has been found that such increased strength is obtained when the mortar according to the invention, after breaking up of the emulsion and vaporization of the emulsion water, contains certain predetermined amounts of bitumen; these amounts of bitumen were found by extensive tests to be 3.5% to 5.2% at a weight of the dry sand used for making the mortar of 75—81 pounds per cubic foot. A mortar of the composition set forth is sufficiently strong to answer all conventional purposes. The percentage set forth naturally depends on the character of the sand used; tests have revealed the finer the sand used the greater the strength. It has been found that at a size of the grains of the sand of 0.2 inches, at least one third of such coarse sand must be replaced by finer sand in order to obtain a strength which is greater than that of brick work which is constructed with crude calcium acetate of a mixture proportion of 1 to 4.

Conventional bitumen emulsions or tar emulsions, particularly the so-called cold asphalt, containing an average of 50% to 60% bitumen may be used for producing the mortar according to the invention. In order to assure a predetermined desired strength of the brick-work a certain bitumen content of the emulsion used is essential. For producing the mortar according to the invention it must also be determined whether water be added to the mixture of sand and bitumen emulsion in order to adapt the mortar to be applied with a ladel and also whether the sand used is dry or moist. In the following examples, compositions of mortars according to the invention using emulsions having a bitumen content of 50% to 60% are used. For intermediary bitumen contents the figures must be changed proportionately.

Example 1

For obtaining a strength of the construction using the mortar according to the present invention which strength is equal to that of a conventional brick-work construction made with crude calcium acetate containing 1 part by volume lime to 4 parts by volume sand, the mortar according to the invention is of the following composition:

Bitumen-emulsion

2.82 cubic feet or 7.4 per cent, by volume, emulsion containing 60 per cent bitumen, or 3.35 cubic feet or 8.6 per cent, by volume, emulsion containing 50 per cent bitumen.

Sand

35.51 cubic feet or 9.2 per cent or 91.4 per cent respectively, by volume, pit sand free of loam.

Example 2

For producing a construction the strength of which corresponds to that of brick-work made with crude calcium acetate containing 1 part by volume lime to 3 parts by volume sand, the mortar according to the invention is of the following composition:

Bitumen-emulsion

3 cubic feet or 7.8 per cent, by volume, emulsion containing 60 per cent bitumen, or 3.53 cubic feet or 9.1 per cent, by volume, emulsion containing 50 per cent bitumen.

Sand

23.6 cubic feet or 61.6 or 60.8 per cent respectively, by volume, pit sand free of loam, and 11.7 cubic feet or 30.6 or 30.1 per cent respectively, by volume, crushed lime sand of not more than 0.2 inch grain size.

EXAMPLE 3

For producing a construction the strength of which corresponds to that of brick-work made with lime cement mortar containing 330 pounds cement and 8.85 cubic feet lime to 35.51 cubic feet sand, the mortar according to the present invention is of the following composition:

Bitumen-emulsion

3.89 cubic feet or 10 per cent, by volume, emulsion containing 60 per cent bitumen, or 4.6 cubic feet or 11.5 per cent, by volume, emulsion containing 50 per cent bitumen.

Sand

35.31 cubic feet or 90 or 88.5 per cent respectively, by volume, crushed lime sand of not more than 0.2 inch grain size, or 17.7 cubic feet or 45 or 44.25 per cent respectively, by volume, river sand, and 17.7 cubic feet or 45 or 44.25 per cent respectively, by volume, crushed lime sand of not more than 0.2 inch grain size.

The porportions set forth above with respect to the sand hold good as long as completely dry sand is used. The examples show that when lime sand is used more emulsion is necessary than when quartz sand is used. A simple calculation reveals that the bitumen content of the dry mortar, in the examples set forth above, is 2.6% to 5.2% by volume, on the basis of a weight of the sand used of 112 to 75 pounds per cubic foot. Since the specific weight of the sand varies according to the nature of its material and according to the size of the grain, as a rule 2% to 6% bitumen content of the dry mortar can be assumed.

It may be added that for producing a construction with the mortar according to the invention and having a strength corresponding to that of brick-work made by means of lime mortar any type of sand may be used.

HANS JARUSCHKA.

Published May 11, 1943

Serial No. 337,664

ALIEN PROPERTY CUSTODIAN

PROCESS OF STIFFENING HATS AND THE HATS THUS PRODUCED

Hermann Haakh, Bad Soden (Taunus), and Arthur Voss, Frankfurt am Main-Hoechst, Germany; vested in the Alien Property Custodian

No Drawing. Application filed May 28, 1940

The present invention relates to hats of every kind and it especially relates to a process of stiffening hats.

Felt hats and straw hats or braids consisting of various materials, such as straw, paper, horsehair, or bast, for making hats, furthermore knitted or woven and sewn hats as well as bandeaux are stiffened especially with shellac; glue, gelatine, tragacanth, cherry gum and other similar substances are, however, likewise used for stiffening purposes. Shellac stiffening has proved to be superior, as regards its properties, to such an extent that shellac has nearly exclusively been used for stiffening.

From a chemical and physical point of view shellac is by no means a perfect medium. It is sensitive to heat and already during transport at a high temperature the quality becomes inferior. Bleached shellac is resistant to storing only to a limited extent. Unbleached shellac often possesses an undesirable proper color and even the best-bleached shellac still has a yellow tinge by which pure-white material becomes dyed.

For hat stiffening purposes shellac dissolved in alcohol is used for obtaining stiff hats; for soft hats shellac dissolved in aqueous alkali is used. In order to avoid a bleeding of the dyestuffs, as small a quantity as possible of alkali is used for dissolving the shellac, but the bleeding cannot be entirely avoided. If the felt shows an acid reaction, the shellac readily precipitates and the material is smeared. Moreover, it is necessary to use always several kinds of shellac, i. e. a dark shellac, a shellac of an average color and a bleached shellac of a white color. Dark hats cannot be stiffened with a bleached lacquer and light hats cannot be stiffened with an unbleached lacquer.

In spite of all the afore-named drawbacks it has hitherto been impossible to replace the shellac in a perfect manner by synthetic products. Several synthetically prepared resins containing carboxyl are already known which have been suggested for use as a substitute for shellac, for instance interpolymerization products of maleic anhydride and styrene. In view of too high a content of carboxyl groups these products have, however, the drawback of being soluble again even after having been dried. The material loses its stiffness on dyeing whereas hats stiffened with shellac may be dyed without essentially altering their condition.

Now we have found that resinous interpolymerization products containing at least one olefinic compound having no free carboxyl group, and at least one olefinic monocarboxylic acid as components may be used with great advantage for stiffening hats of every kind and are capable of replacing the shellac or other stiffening agents with best success.

As very suitable interpolymerization products there may for instance be named the resins the one component of which is an ester of vinyl alcohol, for instance vinyl acetate, styrene, vinyl-alkyl-ketones, such as vinyl-methyl-ketone, acrylic acid esters, methacrylic acid esters or other polymerizable olefinic compounds without a free carboxyl group, and the other component of which, i. e. the olefinic monocarboxylic acid is acrylic acid, crotonic acid, alpha-vinyl-cinnamic acid or cinnamic acid.

In the afore-named interpolymerization products it is possible to alter to a large extent the number of the carboxyl groups and in consequence thereof the properties of the products so as to adapt them to the desired conditions. An interpolymerization product of vinyl acetate and crotonic acid may serve as example to illustrate the conditions to be seen in each case of an interpolymerization product; the following table shows the composition in percentages of the interpolymerization product and the pH-value of its ammoniacal solution prepared with as small a quantity as possible of ammonia:

	Per cent	Per cent	Per cent	Per cent	Per cent
Vinyl acetate	97.5	95	90	70	50
Crotonic acid	2.5	5	10	30	50
pH-value higher than	10	7.5	6.5–7	5.5	4.5–4.8

There may be selected a stiffening agent of any desired alcalinity or any desired degree of acidity. In the example given above the mixture suitable for most cases is 90 per cent of vinyl acetate and 10 per cent of crotonic acid. The same or similar is to be observed with other interpolymerization products.

The interpolymerization products are soluble in alcohol and in aqueous alkali. If they have been allowed to dry they are either insoluble or only sparingly soluble so that the material may be stiffened, as if shellac is used, before dyeing it. Like shellac, they are hard in the cold and become plastic when exposed to the action of heat. The stiffened material, therefore, remains capable of being shaped in the heat. In some respects the interpolymerization products are su-

perior to shellac, since they yield entirely colorless impregnations and may be used with the same success for the lightest as well for dark colors. They are resistant to storing for any length of time, insensitive to heat and, after the material has been stiffened, they may be transformed into insoluble salts, for instance into salts of the alkaline-earth metals. The solutions of salts insoluble in water prepared with the aid of organic solvents may likewise be used. Any desired quantity of acid may be added to aqueous alcoholic solutions and to purely alcoholic solutions of the salts of the interpolymerization products or the free acids so that on dyeing not even slight quantities of the dyestuffs are bleeding.

Any desired additions, such as paraffine, artificial resins, insoluble soaps or dyestuffs may be mixed with the stiffening agents used according to the present invention. The mixture with the additions is accelerated by the emulsifying action of the stiffening agents. The simultaneous use of wetting agents may likewise be of advantage. Interpolymerization products having at the same time other valuable properties may be prepared for instance, by introducing by polymerization water-repellent agents such as vinyl stearate, so that during the stiffening operation a water-repellent action is simultaneously produced.

The following examples serve to illustrate the invention, but they are not intended to limit it thereto, the parts being by weight, if not stated otherwise:

1. Undyed woollen bodies for men's hats are stiffened with an ammoniacal solution of 10 per cent strength of the interpolymerization product of 95 per cent of vinyl acetate and 5 per cent of crotonic acid. After the hat bodies have been squeezed they are steamed, rapidly dried and then dyed. Instead of the ammoniacal solution there may be used solutions in fixed alkalies; in that case the material is suitably acidified after the stiffening operation.

2. Finished men's hats of fur felt are stiffened by applying thereon, by means of a sponge, a solution consisting of 2.8 per cent of the interpolymerization product of 90 parts of vinyl acetate and 10 parts of crotonic acid, 5.6 per cent of acetic acid, 74 per cent of methyl alcohol or ethyl alcohol and 17.6 per cent of water. After the material has been dried it is pressed an the sandbag press.

3. Dyed wool felt bodies for ladies' hats are stiffened with an aqueous solution containing 5 per cent of the interpolymerization product of 90 parts of vinyl acetate and 10 parts of crotonic acid as ammonium salt in the dissolved form. After the bodies have been squeezed they are immersed into a solution containing 3 per cent of calcium chloride. The material is then again squeezed and dried.

4. Dyed and deacidified woollen bodies in pastel shades are stiffened by means of an alcoholic solution containing an interpolymerization product of 97.5 parts of vinyl acetate and 2.5 parts of crotonic acid as calcium salt in the dissolved form. The bodies are airdried.

5. Dyed fur felt hats for men are stiffened with a solution of 5 per cent strength of the ammonium salt of the interpolymerization product of 70 per cent of vinyl acetate, 20 per cent of vinyl stearate and 10 per cent of crotonic acid. The hats are allowed to dry and have then become water-repellent.

6. Dyed woollen bodies for men's hats are stiffened with a solution of 8.4 per cent strength of the ammonium salt of the interpolymerization product of 75 per cent of styrene and 25 per cent of acrylic acid. The bodies are squeezed in the usual manner and dried.

7. Dyed woollen bodies for men's hats are stiffened with an aqueous solution of 8 per cent strength of the ammonium salt of the interpolymerization product of 65 parts of vinylmethylketone and 35 parts of cinnamic acid. The bodies are then squeezed in the usual manner and dried. There may be operated with the same success with an aqueous solution of 5 per cent strength of the ammonium salt of the interpolymerization product of 40 parts of alpha-vinyl-cinnamic acid and 60 parts of styrene. It is also possible to use an aqueous solution of 7.5 per cent strength of the ammonium salt of the interpolymerization product of 42 parts of methacrylic acid and 56 parts of styrene.

8. Dyed woollen bodies for ladies' hats are stiffened with an aqueous solution containing 5 per cent of the sodium salt of the interpolymerization product of 90 parts of vinyl acetate and 10 parts of crotonic acid. The stiffening operation being done the bodies are slightly dried, acidified in sulfuric acid of 0.5 per cent strength, rinsed and dried.

9. Paper braids for straw hats are stiffened with an ammoniacal solution containing 10 per cent of the interpolymerization product of 90 parts of vinyl acetate and 10 parts of crotonic acid. As soon as the stiffening operation is done the braids are dried and smoothed. The braids thus obtained are then sewn in known manner over a hat frame so as to obtain a straw hat. It is not necessary to further stiffen a hat made of stiffened braids as described above.

HERMANN HAAKH.
ARTHUR VOSS.

Published May 11, 1943

Serial No. 337,713

ALIEN PROPERTY CUSTODIAN

METHODS FOR COMPLETE COMBUSTION OF FUEL IN BOILERS AND ARRANGEMENTS THEREFOR

Kotaro Wakabayashi, Tokyo-shi, Japan; vested in the Alien Property Custodian

Application filed May 28, 1940

This invention relates to method and arrangement, effective for ensuring complete combustion of fuel in boilers and improving heat transmission efficiency.

The object is to provide a method and an arrangement, by which air necessary for complete combustion of the burning gases produced by the combustion of fuel or flame in the furnace of the boiler is automatically heated in the furnace and automatically supplied into the burning gases or flame in an effective manner.

In the accompanying drawings;

Fig. 1 is a cross sectional view of a furnace for illustrating the principle of the invention;

Fig. 2 is a transverse sectional view of an embodiment of the invention applied to an externally-fired boiler;

Fig. 3 is a front view of a Japanese Admiralty-Type boiler with an embodiment of the invention applied thereto, partly cut way for the clarification of an inner view;

Fig. 4 is a side view of Fig. 3 partly cut away for the clarification of an inner view;

Fig. 5 is a transverse sectional view of a Babcock and Wilcox boiler with an embodiment of the invention applied thereto;

Fig. 6 is a cross sectional view of an externally-fired horizontal multitubular boiler with an embodiment of the invention applied thereto;

Fig. 7 is a transverse sectional view of a marine boiler with an embodiment of the invention applied thereto;

Fig. 8 is a vertical sectional view of a vertical boiler with an embodiment of the invention applied thereto;

Fig. 9 is a transverse sectional view of a Takuma-Type boiler with an embodiment of the invention applied thereto; and

Fig. 10 is a transverse sectional view of a locomotive boiler with an embodiment of the invention applied thereto.

According to the invention, the rising stream of the burning gases produced by the combustion of fuel or flame in the furnace of a boiler is caused to spread against natural phenomena of taking the shape of cones and then to resume the original rising state again, whereby air retaining spaces or pockets are formed between the surface of the flame and the furnace wall. The film of the entrained air enveloping the flame is caused to be retained and heated in the air retaining spaces or pockets. On the other hand, the moisture contained in the flame is caused to evaporate and to form superheated steam, being facilitated by the spreading of the flame, which steam will rush out of the flame due to the activity of the steam particles and the less density of the spread flame. Thus, the steam will rush into the air retaining spaces or pockets and the heated air retained the air retaining spaces or pockets rush into the flame, that is, an interchange of the steam and the heated air is effected in the flame, and the heated air will be utilized as secondary supplied air in the flame to cause complete combustion of the flame. In general, the flame is caused to spread by providing a flame chamber formed by walls extending beyond the walls of the fire box to communicate with the fire box in which fuel burns, and the air retaining spaces or pockets are caused to be formed by the shape of the walls and the top or crown, as the spread flame resumes the original rising state to take the shape of cones. The said extended walls of the flame chamber may be provided in two sides or one side or the fore or rear part of the fire box. In practice, the fire box **2** is formed with vertical side walls **3** extending upward a certain length from the fire grate, so that the flame will rise upward along the walls from the fire grate, so as to reach the top or crown **5**, as shown in Fig. 1. The part of the fire box above the side walls **3** is enlarged and defined by the vertical sides **4** and an arcuate top or crown **5** in order to form a flame chamber **6**. The flame will spread in the flame chamber **6** due to the enlargement of space and the striking against the crown **5**, but it will not circulate in the upper corners, so that air spaces or pockets **7** will be left there.

In Fig. 2 showing another application of the invention, the combustion chamber **11** communicating with the fire box **6** of the furnace **9** under a horizontal smoke tube boiler **8** is provided with partition walls **12** having passages **13** for flame. The location and size of the passages **13** is determined so as to cause flame to bias toward the heating surface of the boiler and to leave air retaining spaces or pockets **14** around the flame. With this construction, the air entraining with and enveloping flame is partly arrested by the wall on its passage and will be retained in the air retaining spaces or pockets.

The invention is to solve the question for ensuring complete combustion of fuel in steam boilers by investigating precisely the spreading condition of flame and air and the proportion in volume of flame and air and by observing the combustion state of fuel on the fire grate and in the furnace. In general, it is well known that a combustion chamber of a definite dimension

is necessary for a definite grate area, and accordingly it is rational to vary the dimension of the combustion chamber depending on the variation of quantity of volatile products of the combustion, which is larger on the beginning of combustion and decreases gradually as the combustion proceeds, but such is unpracticable. It is evident by the fact that when coal is put on the fire in the furnace, volumes of murky smoke rise from the chimney at the beginning, the generated volatile products being discharged in an incomplete combustion state due to an insufficient dimension of the combustion chamber to meet the quantity of the volatile products generated, and the smoke becomes light gradually as the combustion proceeds. According to the invention, the flame rising from the fire grate is caused to spread, whereby the combustion extends to the center of the flame to minimize the quantity of the volatile products discharged in an incomplete combustion state. The spreading of the flame promotes also the evaporation moisture in fuel and air contained in the flame, and causes the fuel and moisture to be evaporated in a superheated state by the high heat of the flame. A part of air entering through air inlets of the fire box will flow along the stream of the flame so as to envelop the stream of the flame, but will be retained in the air retaining spaces or pockets due to the walls and passages therein. The retained air is heated by the flame. Thus, the superheated steam generated in the spread flame will rush from the flame into the air retaining spaces on pockets, due to its high activity, on seizing occasion of less density of the flame, while the heated air in the air retaining spaces or pockets will be drawn into the flame by the induction of draught, so that the interchange of the steam and the air will be instantaneously and easily effected in the flame, and the heated air will serve as secondary supplied air in the flame. This secondary supply of the heated air in the flame is controlled by the steam generated depending on the combustion state, and accordingly is effective to control the supplement of air. Thus, the admission of excessive air in practical working is not so serious, and accordingly the adjustment of the passage for air need not be so precise, as the excessive air is availed in the above mentioned manner. As the air enveloping the flame impairs the heat transmission from the flame, it is advantageous to arrest the air enveloping the flame by the restricted passages for air, particularly to cause the flame to bias toward the heating surface of the boiler. Further, the heat of the flame according to the invention may be transmitted rationally on the furnace and other heating surface. According to the invention, the flame rising from the fire grate is caused to spread, whereby the combustion is caused to extend into the central part of the flame and facilitate the evaporation and escapement of the moisture contained in the flame, and the air film enveloping the flame is caused to be retained in the air retaining spaces or pockets provided in the furnace, which air is heated and utilized as secondary supplied air for the flame by causing the air to interchange with the steam generated in the flame, whereby incomplete combustion gases are caused to make complete combustion and heat transmission efficiency is increased.

The embodiments of the invention are illustrated in Figs. 3–10 inclusive by way of example. A flame chamber is formed above the fire box **16** to extend over a suitable length in the fore part (Figs. 1, 4 and 7), or to extend over the full length of the fire box (Fig. 6), or to extend further backward (Figs. 5, 8, 9 and 10), which chamber is formed by means of the arcuate top or crown **18** (Figs. 3 and 4), or the side walls **17** of a width larger than the distance between the side walls of the fire box (Fig. 6) and the arcuate top or crown **18** (Figs. 5–10). The flame chamber is provided on its rear part (Figs. 3, 4 and 7), or on the middle part of the top (Figs. 5, 6, 8 and 9), or on the fore part of the top with an opening **19**, whereby the flame chamber communicate with the combustion chamber, the air retaining spaces or pockets **20** being provided in the upper corners of the flame chamber. Substantially, the flame chamber having an arcuate top or crown is essentially formed so as to extend partly, or over the full length or rearwardly beyond the full length on the sides or side of the fire box, and to make its transversal sectional area larger than that of the fire box by means of the side walls extended outwardly from the side walls of the fire box, the flame chamber being communicated with the combustion chamber through the opening in the rear part or top. As shown in Figs. 3 and 4, an additional top or crown **21** may be provided in the communicating passage between the fire box and the flame chamber. In case of an internally-fired boiler, the fire box and the combustion chamber may be formed adjacent to its front and plate.

KOTARO WAKABAYASHI.

PUBLISHED

MAY 11, 1943.

BY A. P. C.

K. WAKABAYASHI

METHODS FOR COMPLETE COMBUSTION OF FUEL IN BOILERS AND ARRANGEMENTS THEREFOR

Filed May 28, 1940

Serial No. 337,713

4 Sheets-Sheet 1

Fig. 1.

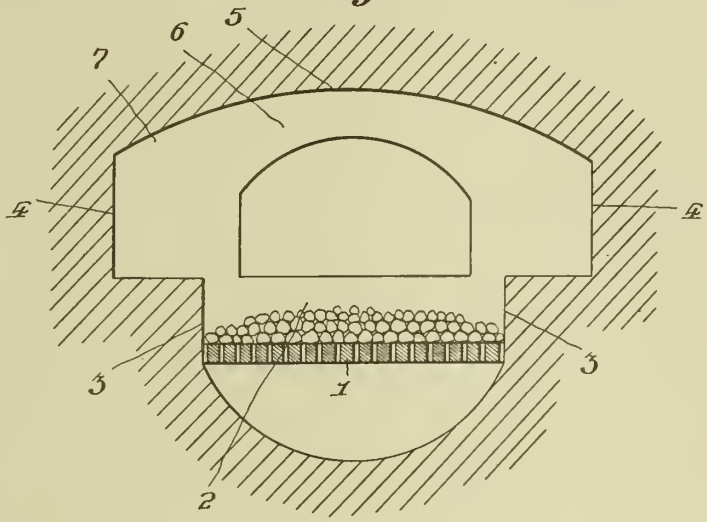

Fig. 2.

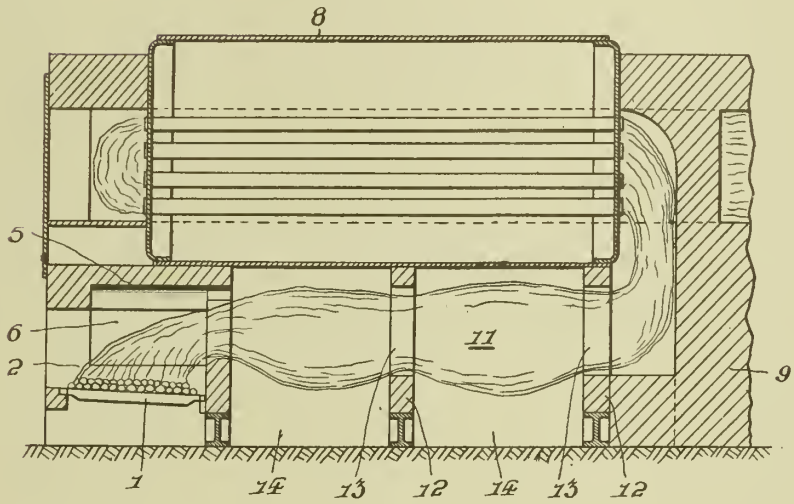

INVENTOR,

K. Wakabayashi

BY:

Glascock Downing & Seebold

ATTORNEYS.

PUBLISHED

MAY 11, 1943.

BY A. P. C.

K. WAKABAYASHI

METHODS FOR COMPLETE COMBUSTION OF FUEL IN BOILERS AND ARRANGEMENTS THEREFOR

Filed May 28, 1940

Serial No. 337,713

4 Sheets-Sheet 2

Fig. 3.

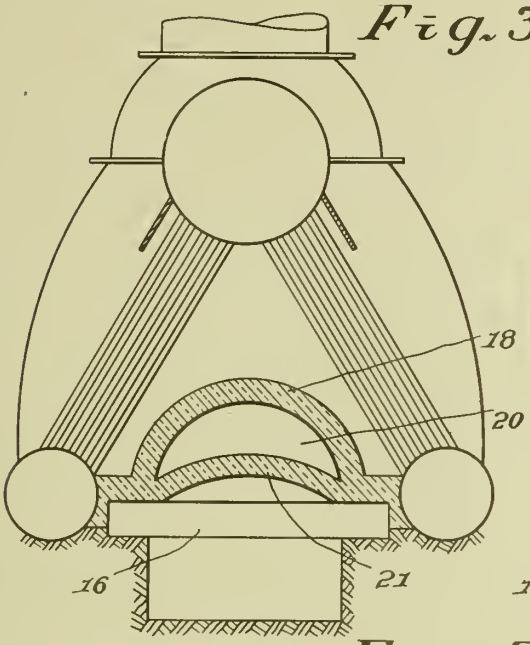

Fig. 4.

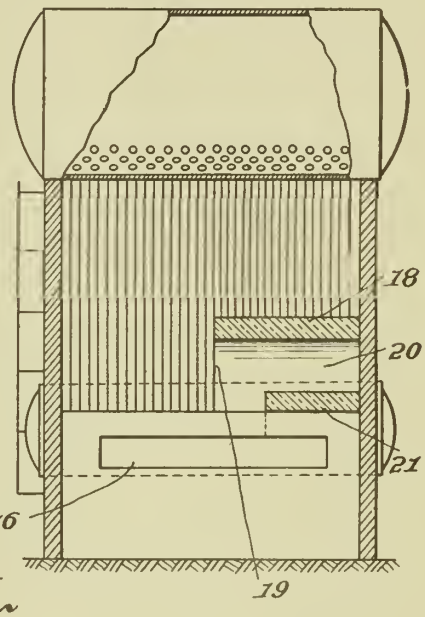

Fig. 5.

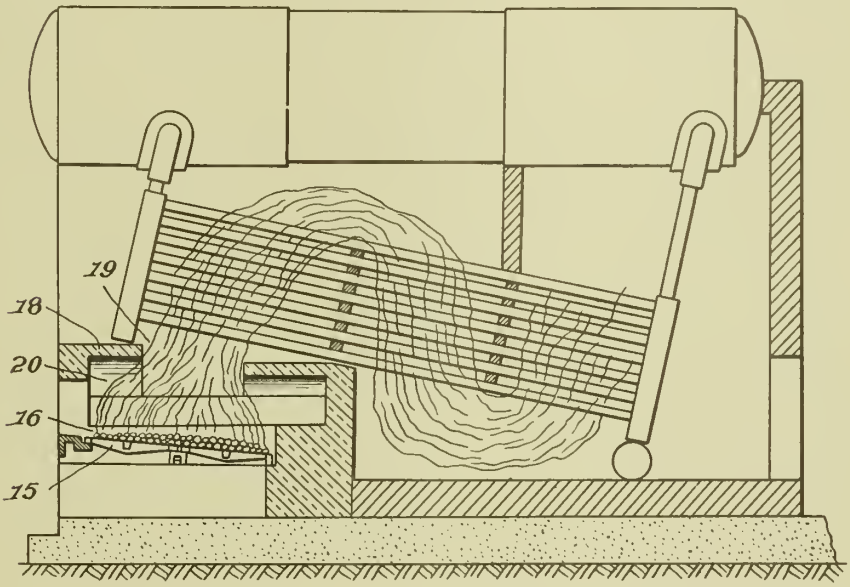

INVENTOR,

K. Wakabayashi

BY:

Glascock Downing & Seebold

ATTORNEYS.

PUBLISHED

MAY 11, 1943.

BY A. P. C.

K. WAKABAYASHI

METHODS FOR COMPLETE COMBUSTION OF FUEL IN BOILERS AND ARRANGEMENTS THEREFOR

Filed May 28, 1940

Serial No. 337,713

4 Sheets-Sheet 3

Fig. 6.

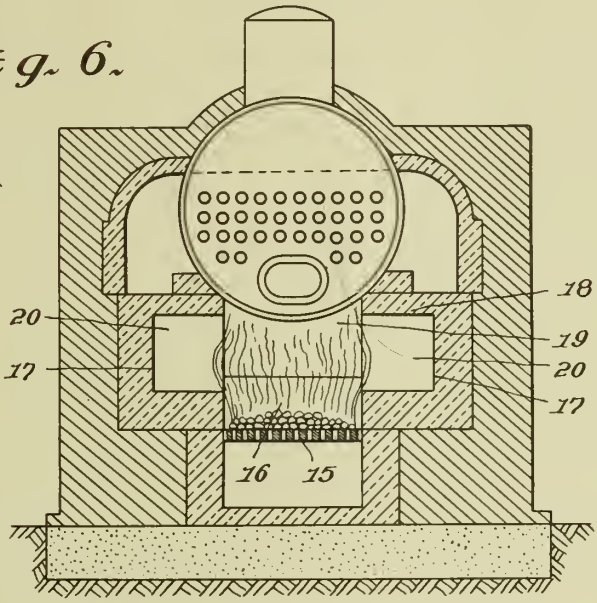

Fig. 7.

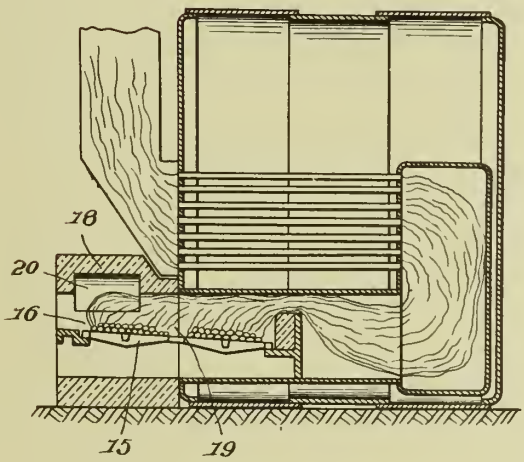

Fig. 8.

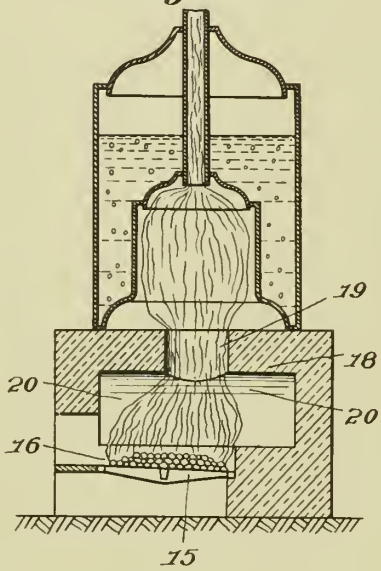

INVENTOR,

K. Wakabayashi

BY:

Glascock Downing & Seebold

ATTORNEYS.

PUBLISHED

MAY 11, 1943.

BY A. P. C.

K. WAKABAYASHI

METHODS FOR COMPLETE COMBUSTION OF FUEL IN BOILERS AND ARRANGEMENTS THEREFOR

Filed May 28, 1940

Serial No. 337,713

4 Sheets-Sheet 4

Fig. 9.

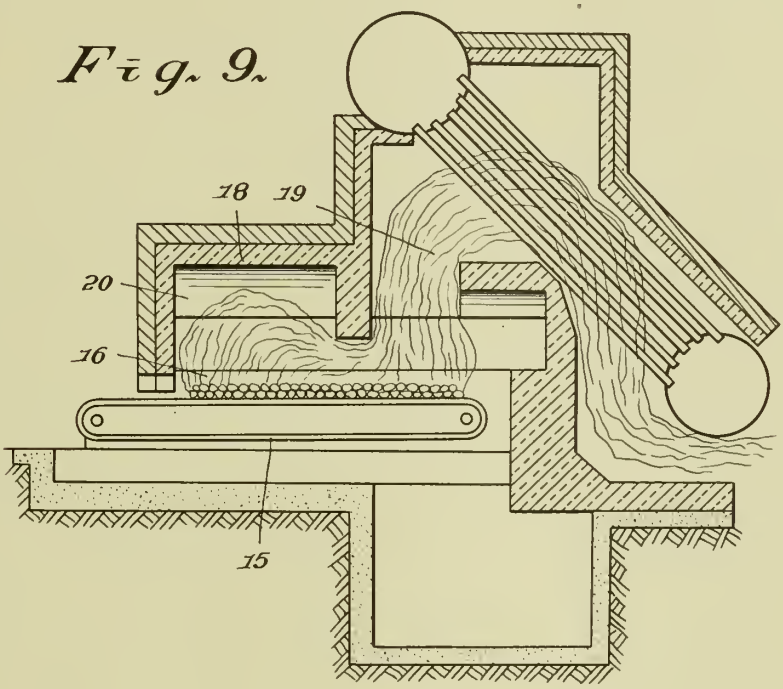

Fig. 10.

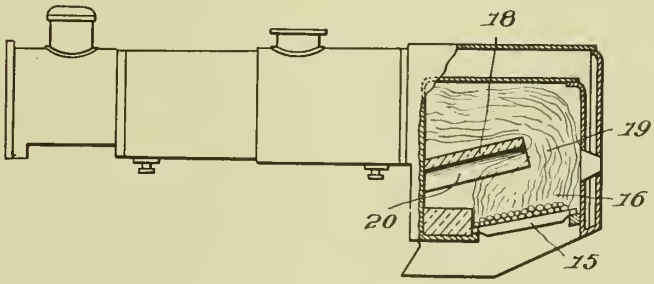

INVENTOR,
K. Wakabayashi
BY:
Glascock Downing & Seebold
ATTORNEYS.

Published May 11, 1943

Serial No. 338,135

ALIEN PROPERTY CUSTODIAN

COIN COUNTING DEVICE

Eugen Reis, Bruchsal, Baden, Germany; vested in the Alien Property Custodian

Application filed May 31, 1940

This invention relates to a coin counting device of the type in which the coin that is the lowermost at the time being of a pile of coins guided in a vertical tube is shoved away by a horizontally moved slide, this movement being then utilised for counting the coins individually, as well as collectively. Concerning counting devices of this type it has already been suggested to lift a vertically guided lever resting with a roll upon a sliding guide path for the coins by as much as corresponds to the thickness of the individual coins concerned. As, for instance, the thickness of a 1-Pfennig-piece amounts only to 1,1 mm, the stroke of the driving lever is only very small, which necessitates the provision of correspondingly large ratios of transmission in order to obtain at the counting device motion-transmitting ways of the requisite length. Considering the unavoidable backlash, or lost motion, in the ratio rods the slight driving stroke mentioned entails easily disturbances and faulty connections of the transmitting members. As with such a counting device also 5-Mark-pieces are to be counted, the thickness of which is more than double the thickness of the 1-Pfenning-pieces, it is necessary to insert into the ratio-rods for actuating the counting members proper a backlash of more than half the total path. This is effected by means of helical springs which, owing to their easy slackening, do not respond sufficiently reliably to the slight "Pfennig-stroke," and operate the counting mechanism either not at all or only insufficiently.

The present improved coin counting device obviates the above mentioned drawbacks on principle by determining the length of the stroke of the lever mentioned not according to the thickness of the coins concerned, but according to the diameter of the same, the length of the stroke, as regards, for instance, a Pfennig, amounting, therefore, not to 1,1 mm, but to 17 mm which are, thus, available for said lever. The system of piling the coins in a vertical tube and withdrawing them singly from the lower end thereof is upheld, the only requirement being to provide in front of the delivery slot of said tube a member movable parallel to the path of the coins and transmitting motion to the counting mechanism.

If said member is a spring-actuated lever which is rotatory supported on an axle located above the above-mentioned slot and extends with its free lower end into the coin feed path, the further advantage will be obtained that, irrespective of the different diameters of the coins, the length of way of said free lever end will be nearly always the same, because the end can be so adjusted that it, after having covered a way of about 15 mm, slides off from the frontal edge of the respective coin and now presses upon the upper surfaces of the same. According to the different thicknesses of the coins the just mentioned action takes place, it is true, also somewhat differently, but the difference between the feed as regards a Pfennig-piece and the feed as regards a 5-Mark-piece amounts, if the minimum length of the stroke amounts to about 15 mm, only to from 2 to 3 mm. The differences between the lengths of the strokes can, therefore, be rendered extraordinarily uniform.

The driving system designed according to this invention entails the useful effect that only a few levers with normal ratio proportions become requisite. The summing-up counting mechanism, for instance, can be actuated directly from the rotary axle of the driving feed lever by means of a simple lever, and in the same manner the counting mechanism for individual countings can be actuated merely by the intermediary of a longitudinal feed member. The low number of the levers reduces considerably the total play of the device and the acceleration of the masses so that a higher number of revolutions is made possible.

The invention is illustrated diagrammatically and by way of example on the accompanying drawings on which Figure 1 is a side-view of the complete arrangement of the new system of levers, Figure 2 is a part-plan pertaining to Fig. 1, and the Figures 3 and 4 show details also fully dealt with hereinafter.

On the drawings, *d* (Fig. 1) denotes the counting table upon which the coins are shed in disorderly state and are shoved towards the hopper **2** (Fig. 3) of the vertical tube **3** in which the coins form automatically a pile. The lowermost coin rests upon the guide member **4** upon which the slide **6** is movable between lateral guide ledges **5**. The slide is forked at its front end and the end portions **7** of the fork are sloped inwardly so that the coin which the fork has seized is automatically centered. The slide **6** is accurately as thick as an 1-Pfennig-piece. At its rear end the slide is connected up to a bar **9** which is moved to and fro by a rocking member **10** moved by a rotary axle **11** supported in the frame of the device. The rocking member is connected with a coupling sleeve **12** easily turnable upon the axle **11**, and a similar coupling sleeve **13** adapted to be coupled with the sleeve **11** is likewise sup-

ported on said axle and firmly connected with a crank-arm 13′ that can be reciprocated by means of a manually operable crank 17, a gearing 15, 16 and a connecting rod 14.

At the side of the coin piling tube and above the coin delivering slot 18 thereof is an axle 19 firmly supported in the frame of the device; this axle supports, in turn, a sleeve 20 to which a steel-spring 21 is affixed. The lower end of this spring is situated in front of the delivery slot 18 just in the middle of the path on which the coins are sliding along. Attached to the sleeve 20 is, furthermore, the lever 22, the upper end of which is connected with the operating lever 24 of the collectively counting mechanism 25 by the helical spring 23. The sleeve 20 is also connected with a lever 26, to the lower end of which is hinged a shoving member 27 having a lifting step 28 and being slidably supported upon a forked member 29 guided vertically with respect to the bottom of the device and being held by a lever 30. The left-hand end of the shoving member 27 with the lifting step situated above it can be lowered by turning the cam 31 so that the shoving member is disengaged from the counting mechanism for individual coins. This mechanism is composed as follows:

The axle 32 is surrounded with a dial 33 bearing the numerals 1–100, there being left, however, between the numerals 0 and 100 a free space, by which the dead play for the re-engagement of the automatic locking member for the engagement gear is bridged. There is provided on the outwardly projecting end of the axle 32 an adjusting knob 34 to which a pointer or hand 35 is attached, and inside of the apparatus are firmly secured to the axle 32 the toothed stepwise movable wheel 36, the number of the teeth of which corresponds with the subdivision of the dial, and the stepwise movable disk 37, having in its rim a tooth-like recess 38, the position of which in the system corresponds with the adjustment of the hand 35 relatively to the numeral "100" on the dial. Turning the wheel 36 intermittently by as much as corresponds to one tooth is effected by an elastic pawl 39 consisting of steel and engaging the teeth of said wheel laterally. The pawl 39 has the shape of a quadrant bearing at its upper end the adjusting tooth co-operating with the wheel 36 and engaging the teeth thereof elastically, as has already been mentioned, whereas the lower end of said pawl is firmly attached to a bell-crank lever 40 easily rotatable supported upon the axle 32 of the pointer. Where the lever 40 joins the elastic adjusting pawl 39, there is arranged an easily turnable roll 41 which can be pressed upwardly by the lifting step 28 of the shoving member 27. When this takes place, the pawl 39 turns the wheel 32 forward by as much as one tooth (in counter-clockwise direction), and simultaneously therewith the pinion 42 easily rotatably supported upon an axle supported, in turn, in the frame of the device is turned because it continually meshes with the teeth of the wheel 32. The pinion 42 engages, at the end of the "one-tooth" adjusting movement, the angularly bent end 45 of the other arm of the bell-crank lever 40 and locks thereby the pinion and the stepwise movable wheel 32 which meshes therewith so as to prevent it from being further rotated by centrifugal action or the like. A ratchet pawl 44 prevents the wheel 32 from being turned in counter-direction. When the adjusting procedure has been finished and the shoving member has returned into the position shown in Fig. 1, a helical spring (Fig. 2) arranged between the upper end of the bell-crank lever 40 and the stationary supporting pivot of the ratchet pawl 44 withdraws said lever 40 and with it also the elastic adjusting pawl 39 back into the starting position shown in the drawings.

On the circumference of the stepwise movable disk 37 slides continually a nose 45 provided at the end of the lower arm of a bell-crank lever 46 supported upon a stationary axle 47 and having at its upper arm an oblique face 48 which presses, on the further rotation of the coupling sleeve 13, the pin 49 situated on this sleeve back, counter to the action of the helical spring 50 (Fig. 1), when the nose 45 enters into the tooth-like recess 38 at the circumference of the disk 37, whereby the two coupling sleeves are separated from one another. As this procedure can take place only when the pointer 35 has arrived at the numeral 100 on the dial, this occurrence means that the automatic disengagement is established with the end, at the time being, of the counting procedure. This manner of effecting the disengagement presents the advantage that the disengagement of the drive takes place free of shocks in that the manually operable crank 17 can be further turned without entailing any effect. The bell-crank lever is, on the one hand, continually drawn by the helical spring 51 into the position in which the uncoupling of the drive is effected, it is true, but on the other hand, it is likewise continually prevented from exerting that effect by the nose 45 bearing continually upon the rim of the disk 37 which is free from teeth on all other portions of its circumference, the end-position "100" constituting, however, an exception as regards the action of the pinion 42 upon the annularly bent end 43 at the other arm of the bell-crank lever 46.

The above described counting device for individual coins permits a selective adjustment in the range from 0 to 100, in that prior to the commencement of the counting procedure the hand 35 is adjusted to that numeral of the dial, the difference of which with respect to the numeral 100 corresponds with the desired quantity to be counted. In order to facilitate this adjustment as regards the most customary part-countings, and also to obviate errors in the adjustment, abutment members 52 are provided which can be pressed out of the plane of the dial so as to block the path of the hand or pointer. These abutments 52 are normally retained by springs 53 so that they not project over said plane, but they can be manually shoved outwardly temporarily by means of keys 54 by the intermediary of levers 54 until the hand or pointer has been adjusted.

Fig. 3 shows separately a transverse section through the coin table 1. The left-hand portion of this table is situated above the counting mechanism, whereas the right-hand portion of said table can be turned downwardly around the hinge 56. Simultaneously therewith that part of the downwardly movable portion of the table which extends above the hinge is upwardly turned so that a rim 57 is formed which again surrounds the remaining portion of the table. This arrangement renders, therefore, possible not only a reduction of the space requisite for the device during transport, but also while the device is used for smaller amounts of coins, as in this case the remaining smaller portion of the table can be fully utilised owing to the existance of the above

mentioned complete rim. The members **58** provided for supporting the upwardly turned portion of the table are laterally turnable.

The coins shoved forwards by the slide **6** slide along the sliding path **59** below the elastic lever **21** after they have acted upon this latter in the manner above described. At the lateral walls of said path springs **61** joining said walls yieldingly are provided at the places **60**, and at the lower end of each of said springs is an outwardly directed pin **62** provided with a grip **63**. The springs **61** can be inwardly moved towards one another counter to the action of their elasticity in order to allow of suspending from them the coin collecting tube **65** which is provided for this purpose with eyes **64**, as shown in Fig. 4. The range of elasticity of the springs **51** is large enough to permit the selective suspension of collecting tubes for coins of various diameter. As the springs form at the same time lateral walls, an automatically centered feed of the coins to the small, as well as to the large collecting tube is obtained whereby a secure introduction of the coins into said tubes is warranted.

EUGEN REIS.

PUBLISHED

MAY 11, 1943.

BY A. P. C.

E. REIS

COIN COUNTING DEVICE

Filed May 31, 1940

Serial No.

338,135

2 Sheets-Sheet 1

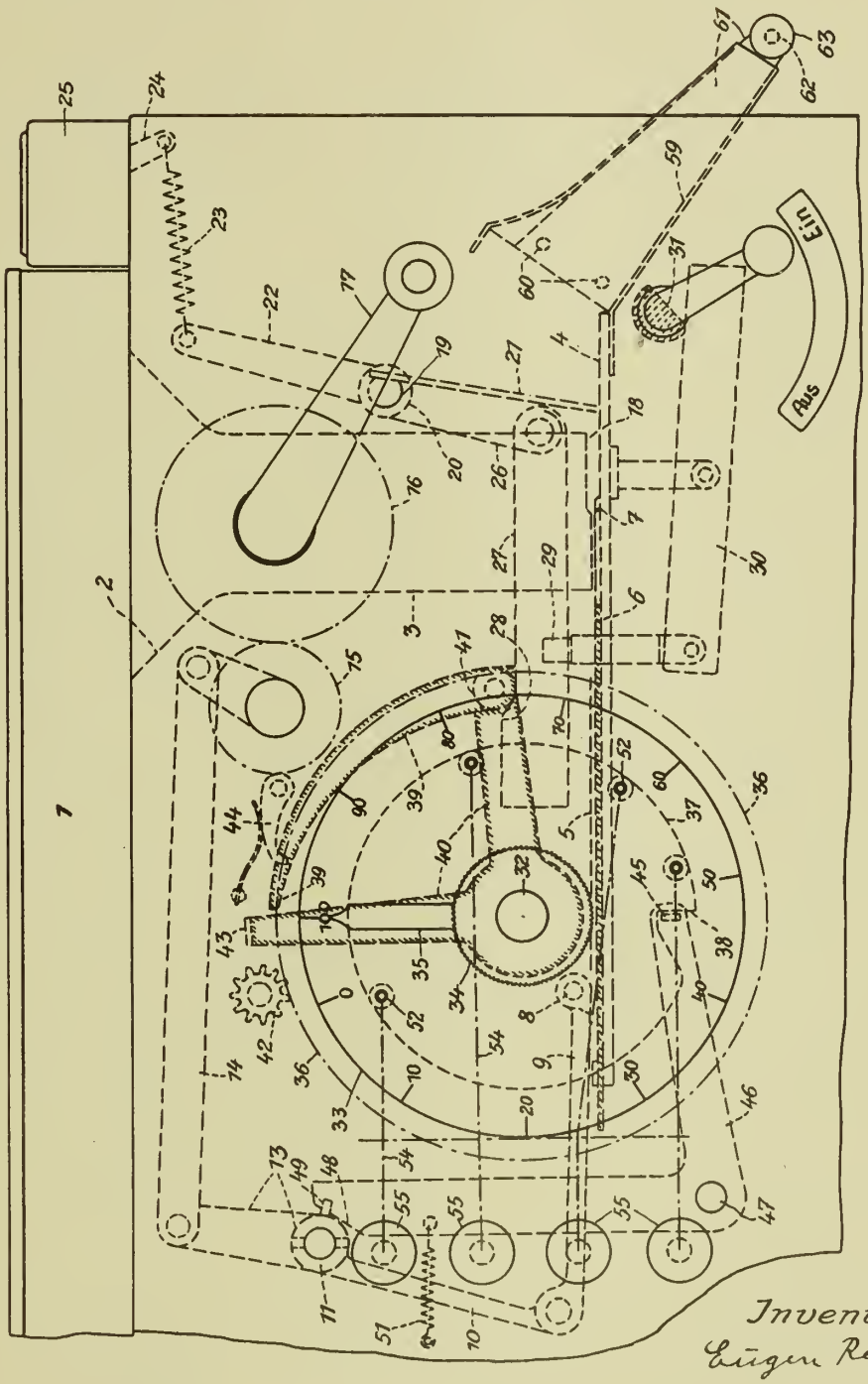

Fig. 1.

Inventor
Eugen Reis

PUBLISHED

MAY 11, 1943.

BY A. P. C.

E. REIS

COIN COUNTING DEVICE

Filed May 31, 1940

Serial No.

338,135

2 Sheets-Sheet 2

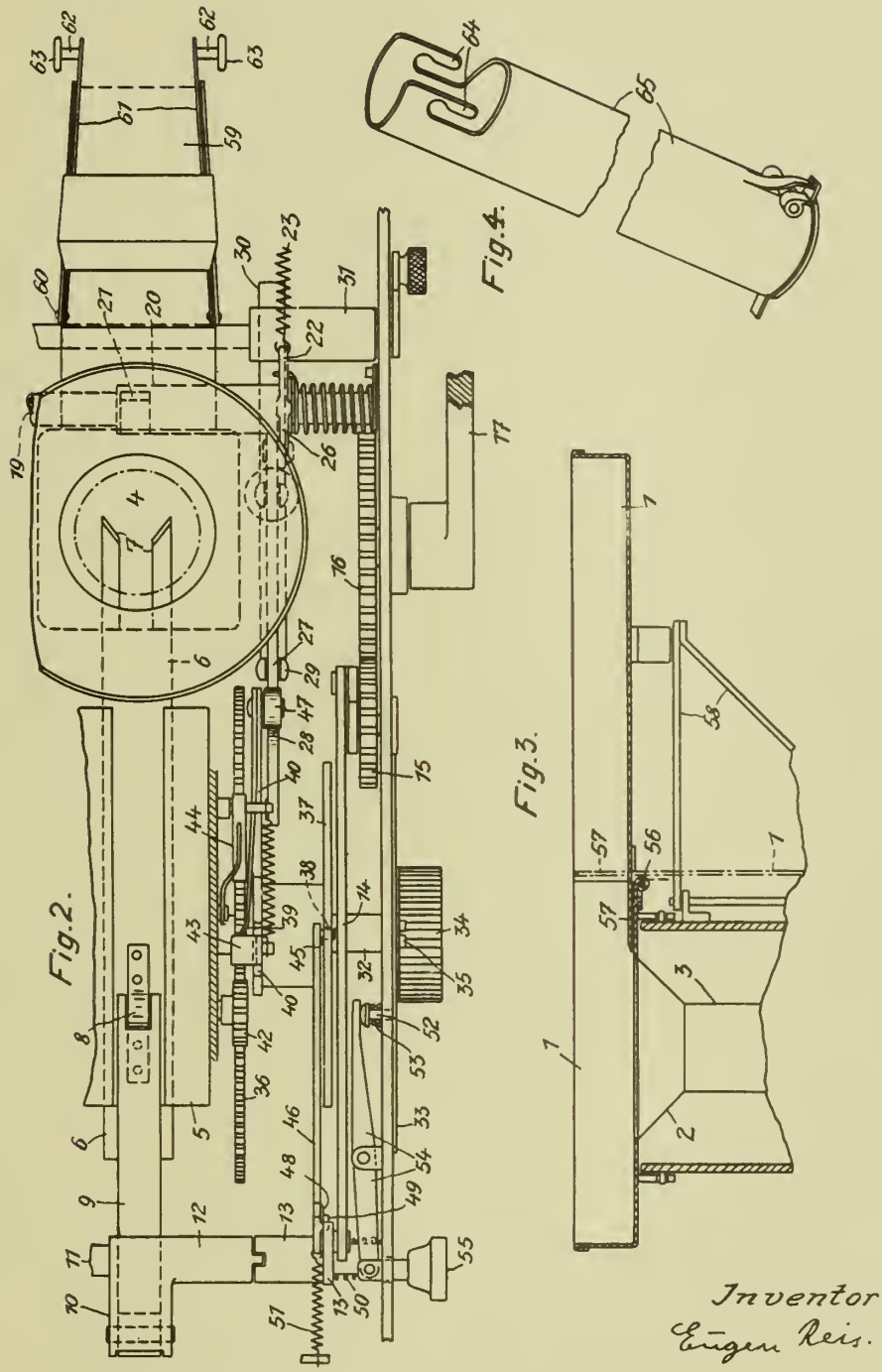

Inventor
Eugen Reis.

Published May 11, 1943

Serial No. 338,173

ALIEN PROPERTY CUSTODIAN

LOCK WASHERS AND METHOD FOR PRODUCING SAME

G. Willy Heinold, Leipzig Cl., Germany; vested in the Alien Property Custodian

Application filed May 31, 1940

The present invention relates to washers for use in combination with nuts and which washers have a combined locking and shake-proofing effect and method for producing same.

Screw-locking-devices have been proposed which comprise radial cuts for producing tooth like portions which portions are twisted and adapted to penetrate the surfaces of the nut and the work material in between which surfaces said tooth like portions are located. Washers of this type are compressed and flattened when the nut is tightened and lose their resiliency and locking effect. In order to overcome this deficiency overlapping of the teeth has been proposed whereby flattening out of the teeth is made impossible; the elasticity of washers of this type, however, is very small. Whenever the screw connection is exposed to high frequency vibrations great elasticity is desired and this cannot lastingly be obtained with the conventional lock washers described above.

It is an object of the present invention to provide a lock washer which overcomes the deficiencies of the conventional lock washers described above by providing teeth having only one edge overlapping an adjacent tooth whereas the other edge does not overlap and the tooth having an inclined portion retains full resiliency. The formation of pairwise groups of teeth facilitates fabrication of the lock washer according to the invention because broadening out of the individual teeth by the application of very high pressure and a swaging operation in order to produce overlapping as is necessary with conventional fan washers is unnecessary when making washers according to the present invention. Broadening out of the teeth in the conventional overlapping construction causes also a reduction of thickness and strength of the tooth material which reduction is not present in lock washers according to the invention. Instead of arranging groups consisting of always two teeth groups of a greater number of overlapping teeth with unoverlapping tooth edges between the groups may be provided.

Further and other objects of the present invention will be hereinafter set forth in the accompanying specification and claims and shown in the drawing which, by way of illustration, show what I now consider to be a preferred embodiment of my invention.

In the drawings:

Figure 1 represents a top view of a lock washer according to the invention with the radial cuts finished and before the twisting and groupwise overlapping operation.

Figure 2 is a top view of a finished lock washer according to the present invention.

Figure 3 is a diagrammatic view of the side faces of the teeth of a lock washer according to the present invention after the twisting and before the grouping and overlapping operation whereby said side faces are unwound into a plane.

Figure 4 is a diagrammatic view as in Figure 3 and after grouping and overlapping operation from one side.

Figure 5 is a diagrammatic view as in Figure 3 and after grouping and overlapping operation from both sides.

Like parts are designated by like numerals in all figures of the drawing.

Referring more particularly to the drawing the washer according to the present invention comprises a solid ring portion 13 which with the teeth protruding outward as in the embodiment of the invention illustrated is located in the center and which forms the outer portion of the washer in cases where the teeth project inward. From ring portion 13 an even number of teeth, in the case illustrated 1 to 12, project outward and are grouped in pairs whereby an odd numbered tooth overlaps an even numbered tooth which is next adjacent in clockwise direction to the odd numbered tooth. Between pairs of teeth forming a group there is a wedge shaped clear ance.

The washer according to the invention is produced as follows:

A disc shaped work piece is provided with radial slots and the parts between the slots are twisted by placing the disc between stamping tools 14 and 15 as diagrammatically shown in Figure 3. In the next following operation a tool provided with wedge shaped extensions 16 as diagrammatically shown in Figure 4 replaces tool 14 whereby the extensions 16 are inserted into every other radial slot. Extensions 16 push the odd numbered teeth partly over the adjacent even numbered teeth whereby the slots into which the wedge portions 16 are inserted are increased. With this method of forming the lock washer the thickness of the teeth is not reduced and formation of wrinkles which, by the way, is not of any consequence can be prevented by definitely holding the ring portion 13 in place. If, due to the counter pressure of the matrix 17, a ridge is formed, this does not matter because such a ridge bites into the material to which the washer is

pressed later on and improves the locking effect of the washer. In order to assure true symmetrical configuration of the finished washer a third production step according to Figure 5 may be added. In this third step a tool having upwardly projecting wedge shaped portions 18 replaces the matrix 17 whereby the portions 18 are inserted from below into the same radial spaces produced before by portions 16 and the even numbered teeth are pushed under the adjacent odd numbered teeth whereby with the cooperation of the counter pressure matrix 19 the washer is completed. In case the tangential displacement is carried out in two steps symmetric formation of ridges, if any, is assured and a washer according to Figure 2 is produced whereby always two adjacent teeth forming one group fan-like overlap one another.

The overlapping portions of the pairs of teeth forming groups definitely prevent flattening of inclined segments when the washer is in actual use whereby at the same time the resiliency of the twisted segments is retained. The washer according to invention produces a compound result: rigidity is combined with resiliency and adaptability of the washer whereby also with vibrations acting on the washer from one side only definite locking action is assured during the whole life of the washer.

Without departing from the present invention the lock washer according to the invention may be made cone shaped and/or with inwardly projecting segments. Groups of three teeth may be provided whereby both lateral edges of the center tooth are overlapped. With this embodiment of the invention greater rigidity of the washer against compression is assured.

While I believe the above described embodiments of my invention to be preferred embodiments, I wish it to be understood that I do not desire to be limited to the exact details of design, method and construction shown and described, for obvious modifications will occur to a person skilled in the art.

G. WILLY HEINOLD.

MAY 11, 1943. LOCK WASHERS AND METHOD FOR PRODUCING SAME **338,173**

BY A. P. C. Filed May 31, 1940

Fig. 1.

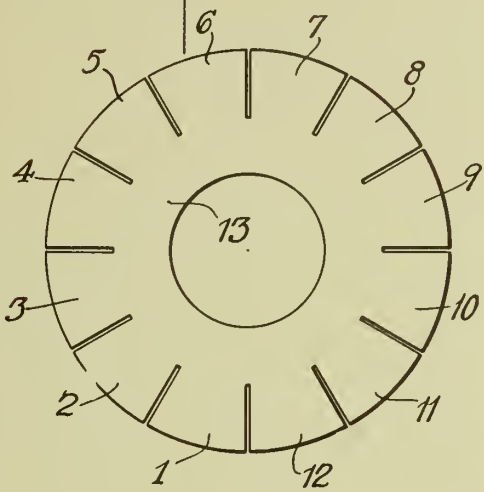

Fig. 2.

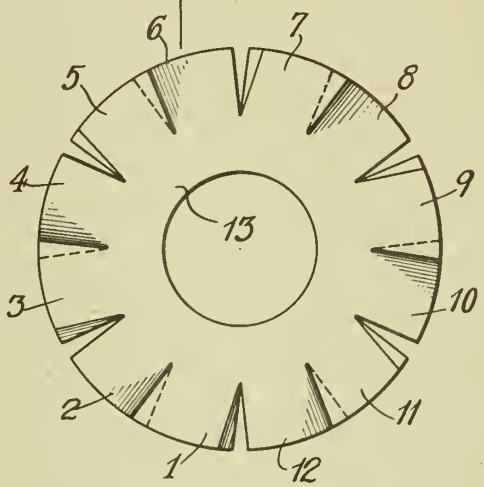

Fig. 3.

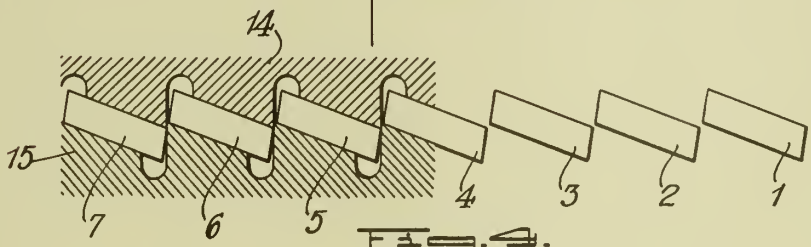

Fig. 4.

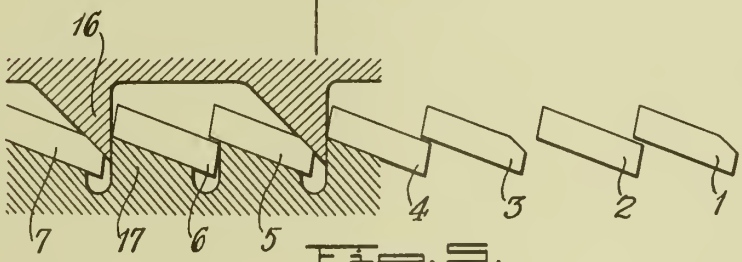

Fig. 5.

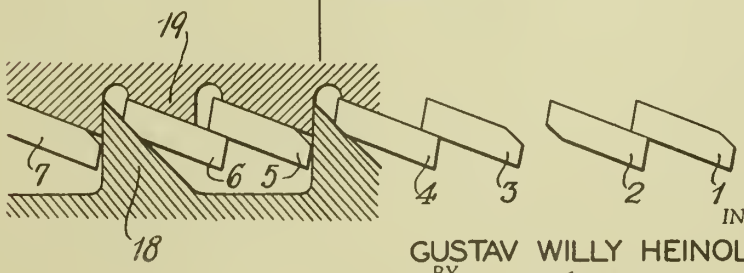

INVENTOR.

GUSTAV WILLY HEINOLD

BY Karl A. Mayr.

ATTORNEY

Published May 11, 1943

Serial No. 338,620

ALIEN PROPERTY CUSTODIAN

CHANGE-OVER DEVICE FOR CIRCULAR WEAVING LOOMS

Henri Pelcé, Flixecourt, France; vested in the Alien Property Custodian

Application filed June 3, 1940

Circular weaving looms exist of the type in which the warp threads are fed at right angles or approximately at right angles to the axis of the loom and the shuttles are pushed by rollers located outside the shed, acting, across a sheet of warp threads, on rollers mounted at the rear of the shuttles.

In order that this propulsion should be practically possible at high speed, the warp threads of the sheet trapped between the pushing roller and the pushed roller must be only slightly distorted, and for that purpose, it is necessary:

1. That the pushing roller should rotate on itself in a direction and at a speed such that the sheet of threads which is clamped between both rollers is subjected to no tangential stress;

2. That, at the place where it is clamped between the pushing roller and the pushed roller, said sheet of threads, should be inclined relatively to the horizontal according to an angle equal or approximately equal to that which the tangent common to both rollers forms with the horizontal, at their point of contact.

The condition 2 has already been satisfied by devices for forming the shed by means of needles, heddles or frames controlling only one warp thread, or a small number of warp threads, in such a manner that the distortion imparted to the threads by the passage of the rollers is sufficiently small so as not to damage the said threads. In the second case, the distance between the two extreme threads of one and the same frame can scarcely exceed, for the strongest threads, a small fraction of the diameter of the pushing roller.

Unfortunately these devices which lead to the use of a large number of needles, heddles or frames, necessarily of small dimensions, are costly, difficult to realise mechanically and do not allow of operating at high speed industrially.

The present invention is adapted to allow the use of frames each controlling a large number of threads (in particular, on a length greater than the diameter of the pushing roller) whilst forming, at the place where the sheet of warp threads is clamped between the pushing roller and the pushed roller, a perfect continuous curve thread to thread, having the desired inclination.

The change-over device according to the invention is more particularly characterised by the combination of means for controlling the heddle frames imparting to the latter vertical displacements of small amplitude, with a suitable shaping of the shuttle shoes such that the opening of the shed is accelerated by the sliding of said shoes against the warp threads and that the lower sheet forms, at the place where it is clamped between the pushing roller and the pushed roller, a continuous curve having the desired inclination, and this whatever may be the number of heddles in each frame.

For that purpose the shuttle shoes comprise at the front, a nose arranged to engage in the slightly open shed and to complete the opening of said shed by the sliding movement of its edges on the upper and lower sheets.

But, in circular weaving looms which use, as members for clamping the weft, either combs sweeping over but a small portion of the shed, or pressure needles, or rollers, it frequently happens that owing to the breaking of a warp thread, the strand which has become free lies across the immediately adjacent warp threads, and this owing to the displacement of the shuttles which tend to draw along after them any body which, for any reason whatever, takes a bearing thereon.

The entanglement resulting from this mishap can partly or entirely obstruct, in a certain zone, the passage of the shuttles which follow; the latter naturally cut the obstacles which are in their path. It will be easily understood that the defect produced becomes so much the more serious as the loom takes a longer time to stop.

The interlocked points of the entanglements are always in the axis of the sheds, and the defects produced increase in importance in proportion as said points are removed from the well as the shuttles find it more and more difficult to clear their way. The attaching nose of their distorting shoe which acts in the same way as a cam, or as a plough share cannot alone effect the selection of two interlocked sheets. In its displacement it can only determine the breakages of most of the threads caught in the entanglement, which results in repairs which are often long and, notwithstanding all the care taken, defects which can be frequently detected in the linen cloth.

The present invention is also adapted to remedy these inconveniences, or, at least to limit the seriousness thereof, for that purpose the point of the distorting shoe of the shuttles is offset relatively to the median beating plane of the sheds; in this manner, if an entanglement is produced beyond a certain distance from the well, the two interlocked sheds are both picked up on the same side of the nose, and the weaving does not take place in the region considered.

Of course a slight defect is produced in the linen which will present, at certain places, missed picks, but this defect can be easily repaired; moreover, numerous breakages of the warp

threads are thereby avoided, breakages which follow the passages of the shuttles in the entanglement zones, before the loom stops, as soon as the warp-protector is set in action.

The accompanying drawing diagrammatically illustrates and by way of example only two embodiments of the subject-matter of the invention.

Fig. 1 is a perspective view of part of a circular loom showing a portion only of the central well through which the woven fabric descends, the rear of a shuttle and its pushing roller, the front of the following shuttle and two of the warp threads with the respective heddles.

Figs. 2, 3, 4 shows the same elements at three successive moments of a change-over phase of the threads.

Fig. 5 illustrates an extended vertical section made according to the circumference described by the shuttles.

Fig. 6 is a similar section showing a shuttle of different shape provided in order to produce the complete uncovering of the shuttles by a backward movement of the latter.

Fig. 7 is a perspective view of a portion of a circular loom showing only one position of the central well through which the woven fabric descends, the rear of a shuttle slightly different from the above mentioned shuttles and its pushing roller, the front of the following shuttle and four of the warp threads with the respective hedles.

Fig. 8 is a similar view showing an entanglement caused by the breakage of a warp thread.

Fig. 9 is an extended vertical section made according to the circumference described by the shuttles.

1 and **2** designate two warp threads controlled by two respective heddles a_1 and a_2 which are moved in reverse directions by the frames the vertical reciprocating stroke of which is only of small amplitude.

b_1 and b_2 designate two shuttles the shoe of which carries at the rear a roller **3** against which presses a pushing roller **4** having a continuous circular movement around the well **5**.

The shoe of each shuttle terminates at the front in a nose **6** adapted to engage in the slightly open shed (Fig. 1) and to complete the opening thereof by the sliding movement of its edges on the upper and lower sheets (Fig. 2). It results therefrom that, even if each frame comprises a great number of heddles, the respective threads **1** or **2** form sheets the intersection of which by the vertical cylindrical surface over which pass the shoes of the shuttles is a continuous curve, as shown in Fig. 5.

The profile of the rear nose **7** is so chosen that said curve, at the place where the lower sheet passes between the rollers **3** and **4**, has the same inclination as the tangent common to the latter.

Of course, the various members of the shuttle liable to come into contact with the upper and lower sheets must be so shaped that during their passage they do not catch the warp threads.

Some of the heddle frames are moved downwardly the others upwardly before the shuttles issue from the corresponding parts of the shed (Fig. 3) so that the threads, still pressed on the shoes, cross between the latter and the heddles until they are abandoned by the rear point of the shoes; thus, the shed in which engages the nose **6** of the following shuttle (Fig. 4) is prepared. The cycle diagrammatically illustrated in Figs. 1 to 4 takes place over again in a similar manner every other shuttle.

The device allows, owing to the suitable shaping of the rear nose **7** of the shoes, of obtaining the automatic and complete uncovering of the shuttles by a simple backward movement of the latter according to a distance at least equal to their length. For that purpose, it suffices that the point of said nose **7** should be above the lower parts of the upper sheet of warp threads, as shown in Fig. 6. Upon the backward movement of the shuttles, all the threads **1** and **2** which are encountered are brought below the shoes so that the shuttles are entirely uncovered. For producing this backward movement, at the front part of each shoe can be provided a second roller **8** against which the pushing roller **4** will act.

It is to be noted that the above described device allows of obtaining the automatic uncovering of the shuttles by another means, relating to the heddle frames and forming the subject-matter of a separate invention.

In the foregoing it has been assumed that the heddle frames were arranged in pairs, for weaving linen, but it is to be understood that the device described can also apply to the use of any weaves. It suffices, instead of having two series of frames, to have a number n thereof greater than two and to suitably combine the eccentrics and the cams which displace them; in this case, the cycle diagrammatically illustrated in Figs. 1 to 4 will take place over again similarly, every n shuttles.

According to the improvement illustrated in Figs. 7 to 9, the front nose **6** of each shuttle is slightly offset relatively to the median beating plane of the sheds, so that if an entanglement **7** due to a broken warp thread **8** occurs at a certain distance from the well **5** (Fig. 8) the two interlocked sheds will both be picked up below the nose **6** which will not risk breaking them.

It is to be noted that neither the means for raising and lowering the heddle frames, nor the support for the pushing roller **4**, nor the means for moving said support about the axis of the loom, nor the means for causing said roller to rotate at the desired circumferential speed, have been illustrated in the accompanying drawing because said means form the subject-matter of separate applications and their representation does not seem necessary for the comprehension of the present invention.

HENRI PELCÉ.

PUBLISHED H. PELCÉ Serial No.

MAY 11, 1943. CHANGE-OVER DEVICE FOR CIRCULAR WEAVING LOOMS 338,620

BY A. P. C. Filed June 3, 1940 2 Sheets-Sheet 1

Fig. 1.

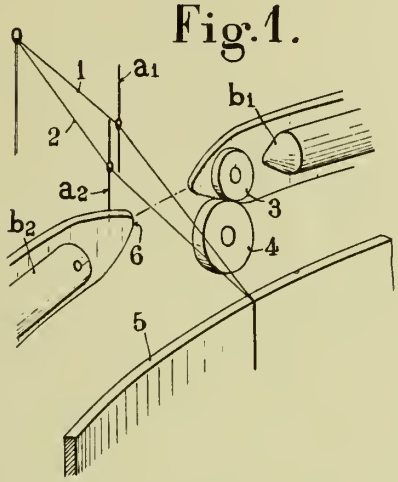

Fig. 2.

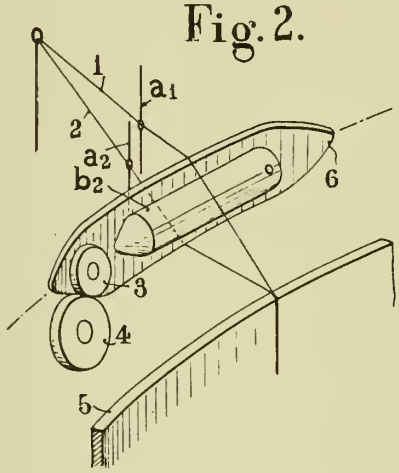

Fig. 3.

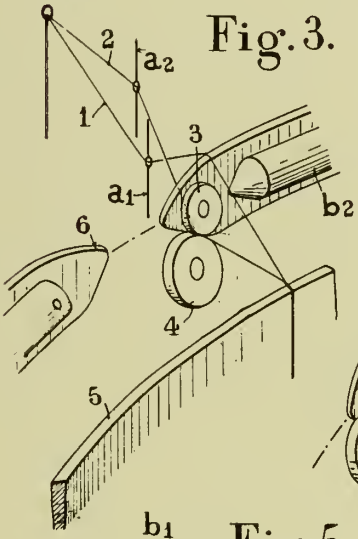

Fig. 4.

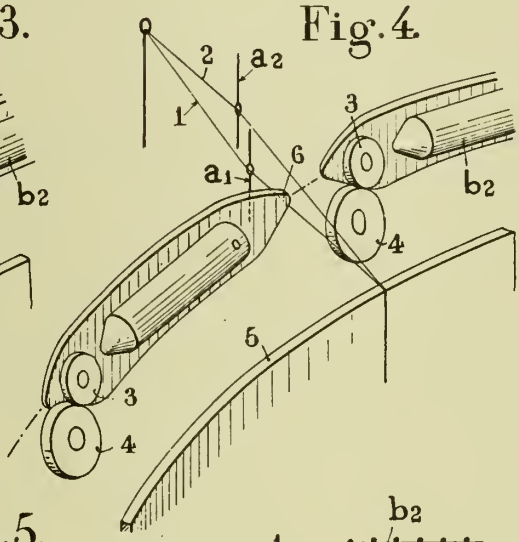

Fig. 5.

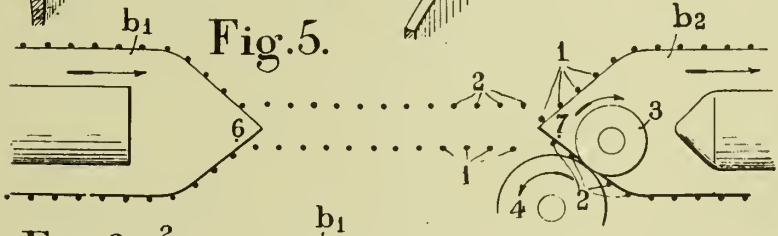

Fig. 6.

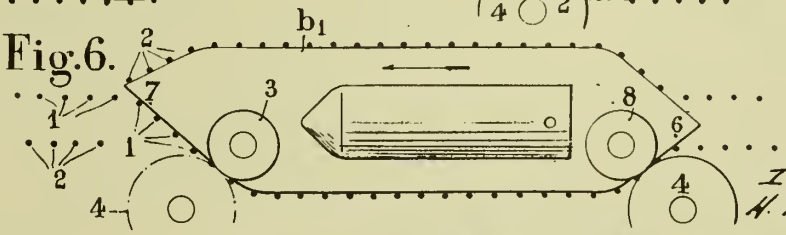

Inventor,
H. Pelcé

by: Glascock Downing & Seebold
Attys.

PUBLISHED H. PELCÉ Serial No.

MAY 11, 1943. CHANGE-OVER DEVICE FOR CIRCULAR WEAVING LOOMS 338,620

BY A. P. C. Filed June 3, 1940 2 Sheets-Sheet 2

Fig. 7.

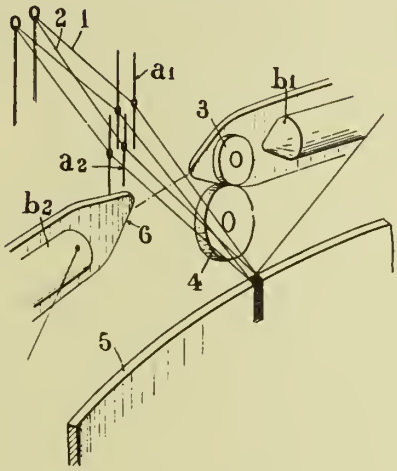

Fig. 8.

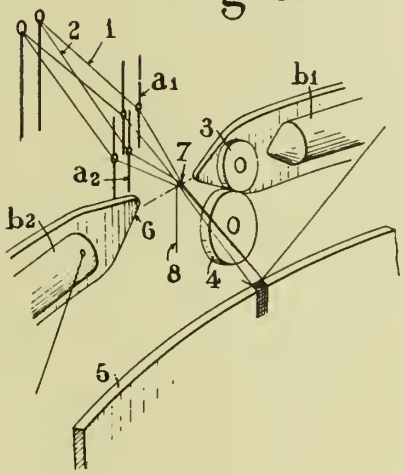

Fig. 9.

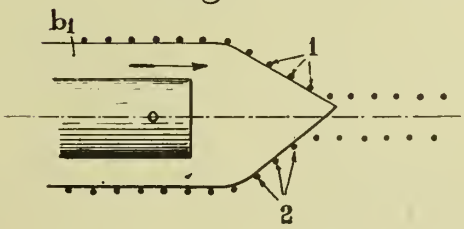

Inventor,
H. Pelcé

By: Glascock Downing & Seebold
Attys.

Published May 11, 1943

Serial No. 338,670

ALIEN PROPERTY CUSTODIAN

GANGWAY CONNECTION BETWEEN TWO VEHICLES COUPLED TO EACH OTHER, PARTICULARLY FLEXIBLE GANGWAY-BELLOWS FOR RAILWAY CARRIAGES

Herbert Goy, Berlin-Tempelhof, Germany; vested in the Alien Property Custodian

Application filed June 3, 1940

The invention relates to a gangway connection between two vehicles coupled to each other, in particular to flexible gangway-bellows for railway carriages.

Hitherto, the known type of gangway connections, in particular gangway-bellows for railway carriages, were connected or disconnected by hand, which was very difficult, dangerous, and took up much time. This work was particularly difficult when the vehicles were standing in a curve. Furthermore, it is known to use compressed air for closing the doors and windows of carriages.

As compared with known devices, the invention principally consists of extending rods for opening and closing the gangway-bellows attached at one end to the vehicle and at the other end to the frame of the gangway connection. The extending rods are connected to a piston operated by super-pressure or vacuum and controlled by valves or by valves and springs. Thus, the difficult and dangerous connecting of the bellows by hand is avoided, and at the same time a damping is obtained between the coupled vehicles, preventing their hunting motion in a high degree without requiring special means therefor.

In the drawing, the subject of the invention is illustrated in various constructional examples, the left sides of the figures showing the construction for compressed air and the right sides that for vacuum. In the drawings,

Fig. 1 is a diagrammatical side view of the flexible gangway-bellows with the extending rods in closing position,

Fig. 2 is the same view with opened bellows,

Figs. 3 and 4 are side views of another constructional form with closed and opened bellows,

Figs. 5 and 6 are side views of a third constructional form with completely automatic operation with closed and opened bellows,

Figs. 7 and 8 are two diagrammatical plan views illustrating the oscillation of the carriages with respect to each other in a straight line and in a curve,

Fig. 9 is a partial diagrammatical side view of a further constructional form of the bellows according to the invention,

Fig. 10 is a similar side view suitable for coupling additional pipe lines or the like.

The gangway connection between the vehicles 1 and 2 consists in known manner, for example, of bellows whose halves 3 and 4 are attached to each of the vehicles and are brought together, and of the frame parts 5 and 6 which may be guided by bent horns 7 or the like. In all constructional examples the type of extending rods is the same, but of course these rods may be constructed in any other way, it only being necessary to operate them by superpressure or vacuum.

The extending rods, provided on both sides of the gangway bellows 3 and 4, consist of two rigid rods 9 and 10 forming an angle and movably connected in a vertical plane by a joint 8. The rod 9 may turn in the point 11 at the vehicle in all directions and the rod 10 my turn in the point 12 on the frame 5 or 6 in all directions. To the joint 8 there is attached a piston rod 15 guided in a casing 13 and connected with a piston 14, whereas there are attached to the piston casing 13 in the points 16 and 17 rigid rods 18 and 19 capable of turning in these points as well as in the points 20 and 21 connecting these rods with the extending arms 9 and 10. When the piston 14 moves in one direction or the other, the bellows 3 and 4 are closed or opened by the extending rods described above.

The extending rods may be attached in half the height of the bellows to the vehicles 1 and 2 as well as to the frames 5 and 6, or preferably at the lower portion of the bellows to the vehicle and to the frame. In order to ensure a uniform opening and closing motion, an extending device consisting of two rods 23 and 24 movably connected in the point 22 is also provided at the upper end of the bellows, the rods 23 and 24 being connected in the points 25 and 26 to the vehicle and to the frame of the bellows so as to turn in these points, the connecting joint 22 being connected by a rigid rod 27 with the connecting joint 8 of the lower extending rods. The angular position of the rods 23, 24 must correspond to that of the rods 9, 10 of the lower extending reds.

The individual elements of the extending rods for the vehicle 2 correspond to those of the vehicle 1 so as to fit together, the respective reference numerals being only partly given on the right halves of the figures for the sake of clearness.

According to the example illustrated in Figs. 1 and 2, the motion of the extending rods is effected as follows. A flexible branch pipe 30 connected to a compressed air pipe line 29 leads into the piston casing 13 below the piston 14 which is loaded by a spring 28. In the compressed air piping 29 there is inserted a stop cock 31, which is shown in opened position in the left half of Fig. 1, so that the compressed air may act upon the piston 14 in the casing 13. The piston 14 is then pressed upwards against

the pressure of the spring 28 whereby the arms 9, 10, and 23, 24 are extended and press the bellows 3 against the bellows 4 of the second carriage 2 whose bellows 4 are moved in the same manner.

If the gangway is to be disconnected, the cock 31 is closed (as shown in the left half of Fig. 2). In this position, the branch pipe 30 is without pressure which is effected, for example, by providing in the plug of the cock 31 a circumferential groove 32 in the direction of the turning axis of the cock 31, which groove is connected on the one hand with the open air and on the other hand in the illustrated position with the branch pipe 30. Thus, the spring 28 may act with full force upon the piston 14 and press the latter back, whereby the opening motion of the bellows is effected via the extending rods.

In similar manner it is possible to operate with a vacuum (right half of Figs. 1 and 2), in which it is merely necessary that the branch pipe 30 leads into the piston casing 13 above the piston 14.

According to the example illustrated in Figs. 3 and 4, two flexible branch pipes 34 and 30 are connected to the casing of a three-way cock 31 inserted in the compressed air piping 29, one of the two flexible branch pipes leading above and the other below the piston 14 in the casing 13. In the closing position of the bellows (Fig. 3), there will be pressure in the branch pipe 30, whereby the piston 14 is moved upwards, the pressure in the branch pipe 34 being removed at the same time owing to the fact that, as described above, the plug of the three-way cock 31 is provided with a groove 32 leading into the open air and corresponding to the piping 34. In the opening position (Fig. 4) in which the three-way cock 31 is turned by 90°, there will be pressure in the branch pipe 34, whereas the groove will remove the pressure in the pipe 30. Thus, the piston 14 is moved downwards and the bellows 3 are folded by the extending rods.

If vacuum is used for closing and opening the gangway connection, the conditions in the example illustrated in Figs. 3 and 4 are the opposite, the branch pipe 34 being connected to the vacuum piping 29 when the bellows are being closed, and the pipe 30 being without pressure, whereas during the closing motion there is pressure in the pipe 30 and there is no pressure in the pipe 34. Therefore, the position of the plug of the three-way cock 31 deviates by 90° from the position of the cock 31 when compressed air is used.

The valves of the cock 31 according to the two examples illustrated in Figs. 1 to 4 may be operated either manually or automatically, the operation in the latter case, when coupling or uncoupling the two carriages to be connected, being effected by any kind of control gear.

An example of a gangway connection with automatical closing and opening motion of the flexible bellows is illustrated in Figs. 5 and 6. In this case, a differential piston is used with two pistons 37 and 38 of different diameters. When using compressed air (left halves of Figs. 5 and 6), the pressure pipe leads in through a branch 39 between the two pistons 37 and 38, whereas a second branch 40 leads into the piston casing 13 below the piston 38 with the larger diameter. In the branch 40 there is provided a valve on the coupling part 41 for the carriages 1 and 2, the valve spring retainer 42 being pressed on one side by a spring 43 and having on the other side a valve gear rod 44, extending in the closing position of this valve beyond the outer surface of the buffer 41*a* of the carriage coupling. In this example there is constantly pressure in the branch pipe 39, whereas the pipe 40 is only kept under pressure when the gangway connection is being closed, as the valve 42 is opened by the valve gear rod 44, which is pressed back when the carriages are being coupled. As the pressure from the pipe 40 acts upon the whole surface of the larger piston 38, whereas the pressure from the pipe 39 acting upon the piston 38 is reduced by the pressure acting upon the smaller piston 37, the differential piston moves upwards when the valve 42 is opened and extends the rods which close the bellows. By the uncoupling of the carriages, the valve 42 is closed whereby the pressure in the branch pipe 40 is removed, so that the differential piston will be moved downwards by the pressure from the pipe 39 now becoming effective and causing the gangway to be disconnected.

In applying vacuum, the same arrangement may be used, but the valve 42 then requires controlling in opposite direction, i. e. it is closed when connecting the gangway and it is opened when disconnecting the gangway. It is also possible to insert in the branch pipe 40 a stop cock 45 with a boring (as shown in the right halves of Figs. 5 and 6) according to the cock 31 in Fig. 1, and to turn this cock 45 by any control gear co-operating with the coupling of the carriages, which control gear is not shown in the illustration. Of course, the arrangement according to Figs. 5 and 6 may be provided with a manually operated valve or cock instead of the automatical operation, in case the latter is not desired or not suitable.

The extending rods operated by compressed air or by vacuum with the piston acted upon by pressure or suction at the same time serve as a perfect vibration damper for the two coupled carriages, as in the motions of the carriages with respect to each other the extending rods with the movable piston will yield elastically. In order to damp such vibrations in a particularly favourable manner, the distances of the turning points 11 of each of the bellows 3 at the carriages 1 and 2 are made greater than the distances of the turning points 12 at the frames 5 and 6 of the bellows 3 and 4.

Especially in case the control of the extending rods by the compressed air or the vacuum fails, the invention provides at the connecting joint 8 of the extending rods a manually operated crank arrangement, making it possible to effect the closing and opening by turning a crank, the forces to be applied being very small owing to the construction of the extending rods.

In order to make it possible that the two bellows 3 and 4 are operated simultaneously and that their frames 5 and 6 thus meet half way between the two carriages 1 and 2, the two compressed air or vacuum pipe lines 29 of the two carriages are connected directly with each other via elastic connecting pieces 46, for example by a hose coupling 47, and the hose couplings 30 leading to the piston cylinders 13 are branched off the pressure pipe lines 29. At the branch points there are inserted three-way cocks 48 and 49. Instead of the three-way cocks there may be provided other control gears, such as step valves.

In the opened position of the bellows, both three-way cocks 48 and 49 are in such a position that the connecting pipe 46 as well as the branch

pipes **30** are closed with respect to the pressure pipe line **29** (see the position of the three-way cock **48** on the left). Now, if the bellows are to be closed, only one of the three-way cocks, for example the cock **49**, is turned by 90° as shown in Fig. 1, so that there is pressure in the connecting pipe **46** as well as in the two branch pipes **30**, the two halves of the bellows being closed by the moving pistons **14** and the extending rods in the manner described. When the bellows are being opened, the cock **49** is turned back by 90°, and in order that the pressure in the pipes **46** and **30** may be removed, the cocks are provided with two longitudinal grooves **50** and **51**, which communicate with the open air. By these grooves the pressure in the pipes **46** and **30** is removed in an intermediate position of the cock **49** (turned by 45°), so that the springs **28** of the pistons **14** become effective.

Together with the closing of the bellows **3**, **4**, it is also possible to couple water or steam pipes or electric cables. For this purpose, the frames **5** and **6** of the bellows are provided, as shown in Fig. 10, with lower flanges **52** and **53** which, in the closing position, touch each other with their outer surfaces. The ends of the water or steam pipes **54** lead into these flanges, and furthermore contact boxes **55** and **56** for cables (not illustrated) are pivotally connected at the lower ends of the flanges. For making the connections, pipes **57** with inserted push valves **58** are branched off the pressure pipe lines **29**. The push valves **58** open when the bellows close, and pressure is caused via the pipes **57** in two parallel cylinders **59** and **60**. The spring-controlled piston **61** in the cylinders turns a stop cock **62** in the water pipe **54** via a piston rod and an arm, and the spring-controlled piston **63** in the cylinder **60** oscillates the contact boxes **55** and **56**, whereby the ends of the water and steam pipes **54** and the contacts of the boxes **55** and **56** are connected.

HERBERT GOY.

PUBLISHED

MAY 11, 1943.

BY A. P. C.

H. GOY

GANGWAY CONNECTION BETWEEN TWO VEHICLES COUPLED TO EACH OTHER, PARTICULARLY FLEXIBLE GANGWAY-BELLOWS FOR RAILWAY CARRIAGES

Filed June 3, 1940

Serial No. 338,670

4 Sheets-Sheet 1

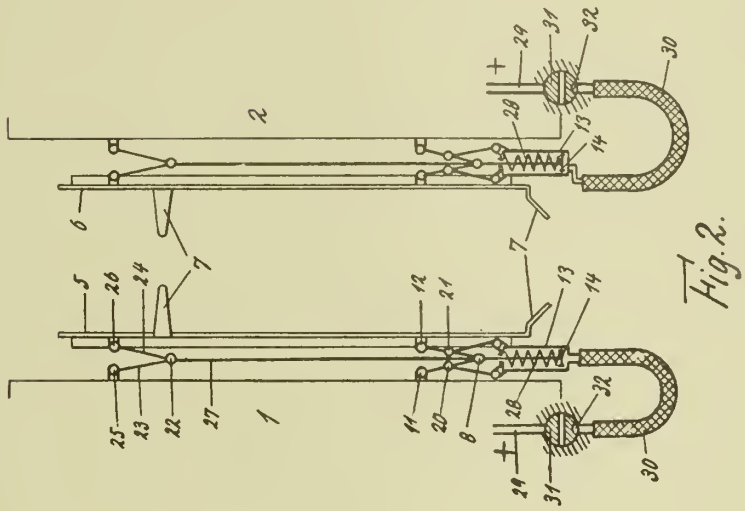

Fig. 2.

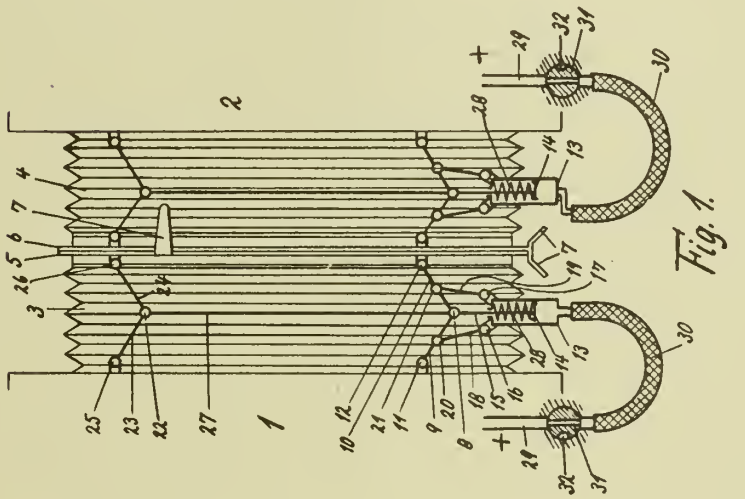

Fig. 1.

Inventor:

Herbert Goy

By J. Fairine

Atty.

PUBLISHED

MAY 11, 1943.

BY A. P. C.

H. GOY

GANGWAY CONNECTION BETWEEN TWO VEHICLES COUPLED TO EACH OTHER, PARTICULARLY FLEXIBLE GANGWAY-BELLOWS FOR RAILWAY CARRIAGES

Filed June 3, 1940

Serial No. 338,670

4 Sheets-Sheet 2

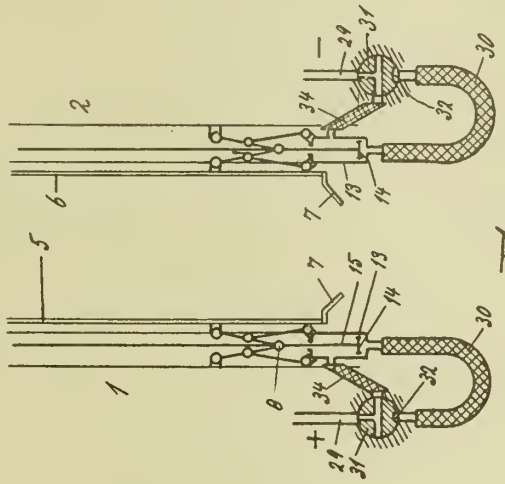

Fig. 4.

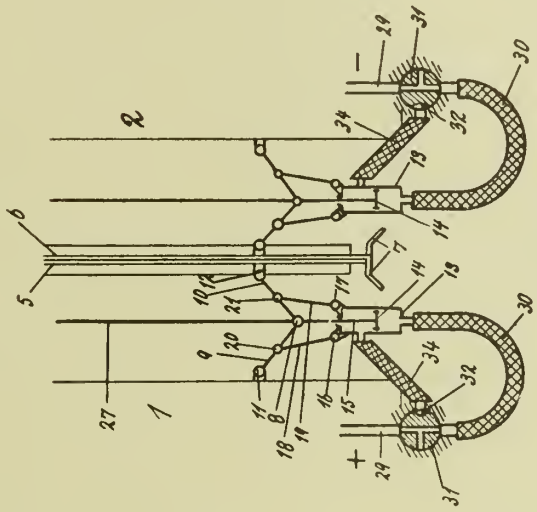

Fig. 3.

Inventor:
Herbert Goy
By J. Smirine
Atty.

PUBLISHED

MAY 11, 1943.

BY A. P. C.

H. GOY

GANGWAY CONNECTION BETWEEN TWO VEHICLES COUPLED TO EACH OTHER, PARTICULARLY FLEXIBLE GANGWAY-BELLOWS FOR RAILWAY CARRIAGES

Filed June 3, 1940

Serial No. 338,670

4 Sheets-Sheet 3

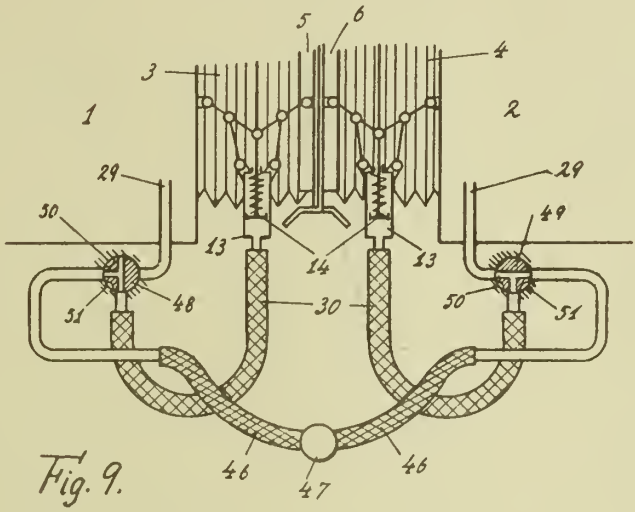

Fig. 9.

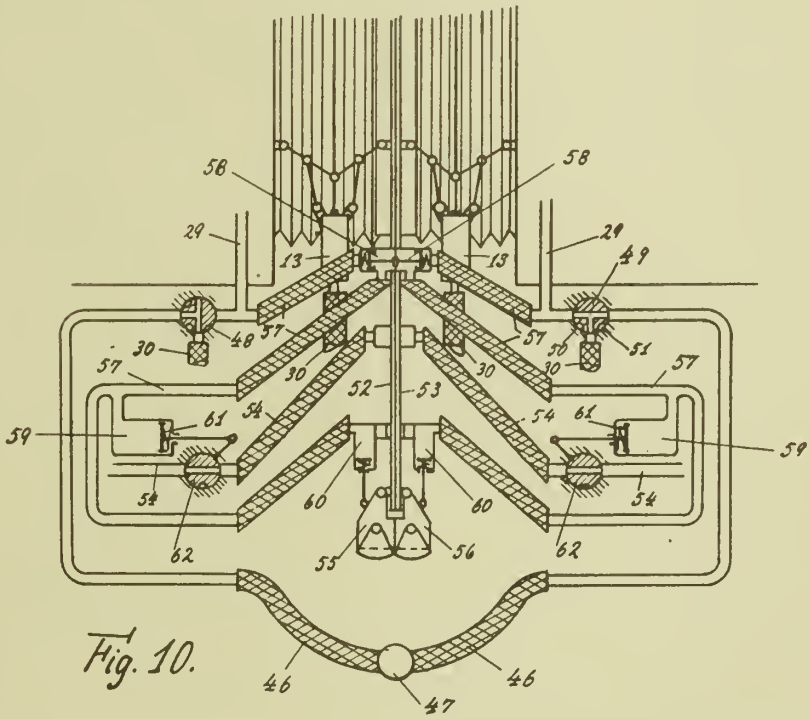

Fig. 10.

Inventor:
Herbert Goy
By J. Quirke
Atty.

PUBLISHED

MAY 11, 1943.

BY A. P. C.

H. GOY

GANGWAY CONNECTION BETWEEN TWO VEHICLES COUPLED TO EACH OTHER, PARTICULARLY FLEXIBLE GANGWAY-BELLOWS FOR RAILWAY CARRIAGES

Filed June 3, 1940

Serial No. 338,670

4 Sheets-Sheet 4

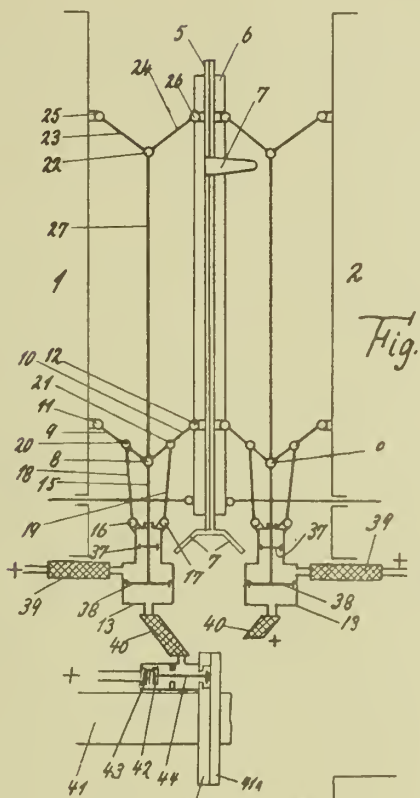

Fig. 5.

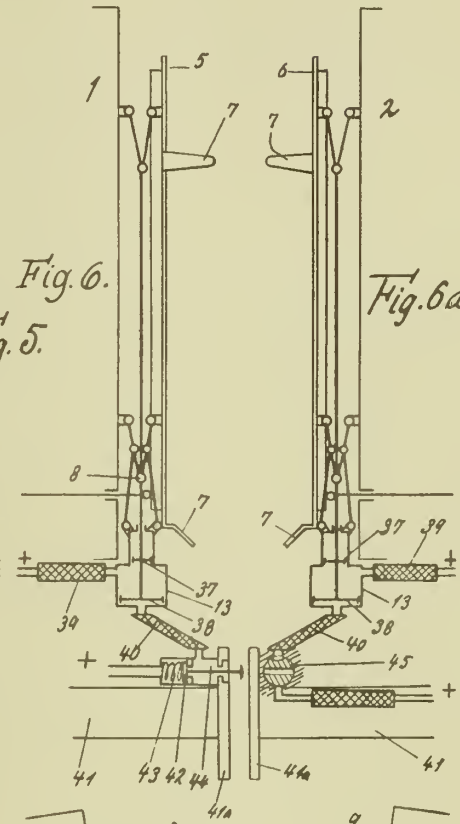

Fig. 6.

Fig. 6a

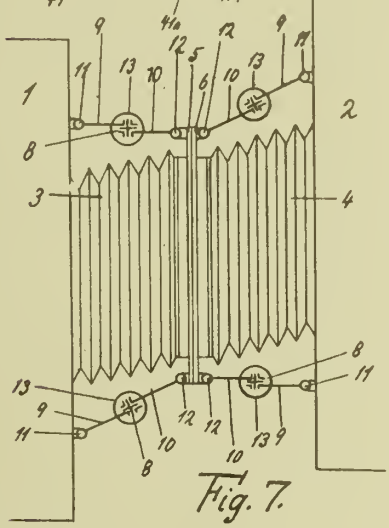

Fig. 7.

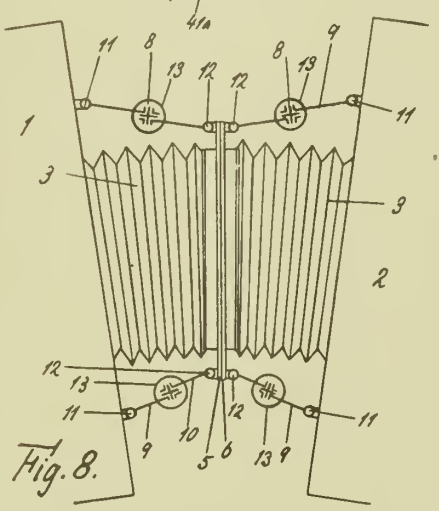

Fig. 8.

Inventor:
Herbert Goy
By Jno. Linine
Atty.

Published May 11, 1943

Serial No. 338,719

ALIEN PROPERTY CUSTODIAN

DESUPERHEATER FOR LOCOMOTIVE APPLICATION

André Huet, Paris, France; vested in the Alien Property Custodian

Application filed June 4, 1940

The present invention relates to improvements in locomotive superheaters, the object being to assure constancy of the temperature of superheated steam upon its arrival at the driving turbine or engine cylinders or at the high pressure cylinders in the case of compound engines.

In carrying out the invention a locomotive is equipped with a superheater designed to afford at least the superheat temperature desired under the most unfavorable operating conditions which, in general, obtain when locomotives operate at low speed. One or more desuperheaters are provided through which part of the superheated steam is diverted under control of a thermostat installed in the steam pipe near its connection to the cylinder or in other suitable location. When the temperature of the superheated steam is too high a part is desuperheated and again mixed with the part of the steam not desuperheated. The desuperheater is mounted in the locomotive boiler so that the heat units taken from the steam by desuperheating are returned to the water of the boiler.

The single figure of the drawing shows schematically a vertical section of the smoke box of a locomotive boiler to which the invention has been applied.

In this figure the numeral 1 designates the smoke box at the front end of a fire tube boiler 2 and 3 is the dry pipe which conducts saturated steam to the header 4 from which it passes into the superheating elements 5. These elements are, for example, of looped form and located in the flues 26, the steam passing finally to the superheater outlet header 6.

From header 6 the superheated steam is led to the cylinders 8 through the steam pipe 7. Interposed in pipe 7 at a point within the smoke box is a union-like section 9 having lateral branches 10 and 11. The branch 10 is connected by a pipe 12 to a pipe 13 which forms part of a fitting 14 having another pipe 15 connected by pipe 16 to the branch 11 of the union 9. The pipe 13 of the fitting 14 serves to admit superheated steam to a desuperheater consisting of one or several tubular elements 17 from which the desuperheated steam passes to the pipe 15 and thence to the pipe 16. The desuperheater is, as may be seen in the figure, located in the cylindrical part of the boiler tube so as to be immersed in the boiler water.

The fitting 14 which serves at once to support the desuperheater elements 17 and also to close the opening made in the front tube sheet 18 of the boiler to introduce the desuperheater is fixed to the latter by a flange 19 and suitable fastenings. Fitting 14 is formed in such fashion that in the plane of the flange the pipe 13 is entirely surrounded by a cavity of the pipe 15. The flange 19 is in contact at all points with surfaces of the fitting 15 which are touched only by desuperheated steam coming from the desuperheater elements 17; this assures substantial uniformity of temperature and homogeneous expansion between tube sheet 18 and flange 19, these conditions serving to maintain proper sealing relationship between the flange 19 and sheet 18.

Within the union 9 at the entrance of the tube 10 there is mounted on a pivot 20 a flap valve 21 which in its closed position blocks the pipe 10. This valve is mounted with its free unhinged edge turned towards the direction from which the superheated steam comes from the header 6 so that when it is open its rear face is struck by part of the steam coming from the superheater and causes this portion of steam to be directed towards the pipe 12 and the desuperheater. At the same time the more so the wider it is opened, the valve 21 obstructs more or less of the cross sectional area of the pipe 9, that is to say the area of direct passage of superheater steam from the header 6 towards the cylinder 8.

The valve 21 can have any suitable form. It may particularly be in the form of a trough and may be curved or otherwise so shaped as to facilitate the deflection of superheated steam toward the pipe 12. It may also have dimensions greater than those required to shut off the pipe 10 so that when open the obstruction it creates in the union 9 may be such as to assure the best proportioning between the portion of steam that flows through the desuperheater and that which flows directly to the engine cylinder.

By means of pipes 16 and 11 the portion of steam which has been desuperheated in the elements 17 rejoins in the union 9 the portion which is not desuperheated. These two vapors being a different temperature do not mix homogeneously except with difficulty. In the interior of the union 9 beyond the function of the pipe 11, there is provided a nozzle 22 whose opening is turned in the direction of steam flow and toward diffusing apparatus 23 designed to create as intimate a mixture of the two portions of steam as possible. For such purposes there have been provided diffusors having concentric conical surfaces adjustable with respect to concentric cylindrical surfaces, but any other apparatus capable of assuring a proper mixture of the steam portions may be utilized.

As shown in the drawing the union 9 may be formed with local enlargements to assure the constance of pressure drop of steam flowing therethrough despite the presence of the valve 21, the nozzle 22 and the diffusor 23.

Between the union 9 and the admission chamber of the steam chest there is schematically shown a thermostat 24 which can be of any known type. The thermostat being immersed in the steam flowing through the union 9 acts through a linkage 25 of any suitable form to effect the opening or closing of the valve 21 so as to insure the flow through the desuperheater of a suitable amount of steam to maintain uniformity of temperature of the mixture of superheated and desuperheated steam before its arrival at the cylinders 8. For example, if the superheated steam coming from the header 6 is exactly at the desired temperature when it reaches the thermostat 24, the latter will maintain the valve 21 in the position where it blocks off the pipe 10. If the temperature of the superheated steam is too high, the thermostat causes opening of the valve 21.

In the exemplification of the invention which has been described above the valve 21 produces a constriction of the free cross-sectional area for steam flow through the pipe to the engine. It may even happen for certain conditions and sizes of the valve that as a consequence of this constriction of the steam pipe the pressure drop between the superheater and the cylinder may be increased. In locomotives generally, high superheat temperature corresponds to high speeds and to heavy steam consumption, conditions under which the pressure drop has a tendency to increase. To avoid this disadvantage is part of the invention. One can design the valve controlling steam admission to the pipe 10 in such manner that it never creates a restriction in the direct path of the steam flow; for example, one can arrange the valve 21 so that it opens into the interior of the pipe. Under these conditions the total area offered to the steam will be greater the more the valve 21 is opened.

The steam to be desuperheated need not necessarily be taken from the union 9. It can also be taken from any other point, as directly from the superheated steam header 6.

ANDRÉ HUET.

PUBLISHED

MAY 11, 1943.

BY A. P. C.

A. HUET

DESUPERHEATER FOR LOCOMOTIVE APPLICATION

Filed June 4, 1940

Serial No. 338,719

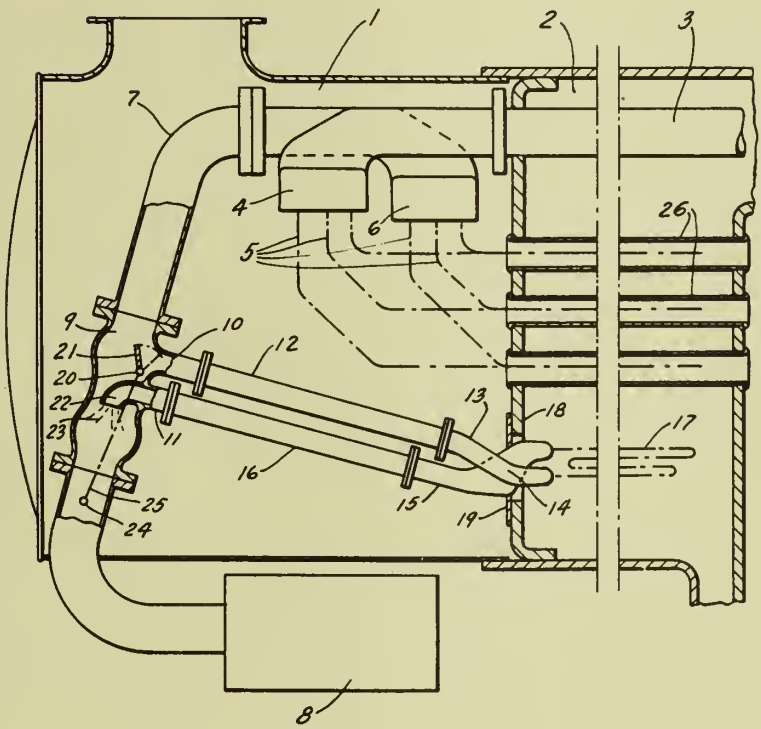

INVENTOR.
ANDRE HUET.

BY James J. Whalen
ATTORNEY.

Published May 11, 1943

Serial No. 339,025

ALIEN PROPERTY CUSTODIAN

DIAPHRAGM PUMPS FOR FEEDING FUEL TO EXPLOSION ENGINES

Louis Guichard, Paris, France; vested in the Alien Property Custodian

Application filed June 5, 1940

In the diaphragm pumps used at the present time for feeding fuel to explosion engines, the displacements of the diaphragm are of variable amplitude which is dependent on the consumption of the engine. In order to obtain this result only the suction movement of the diaphragm in question is positively controlled, the delivery movement being produced by a spring which is necessarily of small power owing to the low value the delivery pressure is required to have (of the order of about 150 gm. per sq. cm.)

Now, at high speeds of operation, the power of said spring is too small to overcome the resistances, in particular those due to the inertia offered by the lever-spindle-diaphragm assembly etc. of the pump. Consequently, the pump lever which is controlled by the eccentric becomes "loose", that is to say it is no longer permanently in contact with said eccentric, thereby producing shocks, noises and disturbances in the output of the pump whereof the diaphragm cannot beat regularly.

Although endeavours have been made to remedy this drawback by means of a second spring which tends constantly to keep the pump lever in contact with the controlling eccentric, this contrivance does not produce the desired result.

When the phenomenon known by the name of "vapor lock" starts, the output should be at its maximum in order to eliminate said phenomenon; now, unless the use of apparatus of undesirable bulk and high cost is considered, this is not the case with present day pumps, the diaphragms of which have a movement of very small amplitude, so that a certain amount of fuel remains for a comparatively long time in contact with the hot metal walls which are insufficiently cooled owing to the very small output; it is these conditions which necessarily produce the "vapor lock" referred to above and this tendency is enhanced by the fact that the fuel which is introduced into the pump is already at a fairly high temperature which it has acquired in the supply pipe.

The diaphragm pump which is the object of the present invention and which is based on quite a different conception from that on which the present day pumps are based, radically overcomes the drawbacks specified above, this being effected without any complication, without greater bulk and, consequently, without higher cost of manufacture than that of the usual apparatus kwown hitherto.

The novel diaphragm pump according to the invention has the following features and advantages:

The regulation of the output and of the delivery pressure of the fuel is no longer effected by means of a weak delivery spring, but by means of a special regulating piston-valve which controls the passage cross-section of the suction pipe of the pump.

Since the delivery spring no longer has a direct influence on the output and on the pressure, it can be given the necessary power to prevent the control lever from becoming loose (looseness due to the inertia effects), whereby silent operation is obtained; furthermore, it is possible to eliminate the spring which is provided in the present day pumps and which is solely intended to keep the pump lever in contact with the controlling eccentric.

The diaphragm effects its total displacement at each cycle and consequently sucks up the maximum volume at all speeds of operation.

The vapor lock phenomenon is automatically eliminated by means of the novel application of a means based on the well known physical phenomenon of the evaporation of a liquid in a vacuum with a considerable fall of temperature, said evaporation phenomenon taking place automatically during the suction stroke of the diaphragm (which always takes up the same maximum volume) whether a small quantity of fuel remains in the pump chamber (and in a storing chamber located before said pump chamber), or whether a very small portion of fuel is introduced at the outset, said fuel evaporating with a considerable fall of its temperature during the increase in the volume sucked in by the diaphragm during its suction stroke. Owing to the fact that this operation takes place at each stroke of the pump, it will be seen that, by the cooling of the liquid (by evaporation in a vacuum) and, consequently, by the cooling of the walls of the chamber, the vapor lock phenomenon is eliminated without its being necessary to use special devices which considerably increase the cost of the pump.

In order to realize the extent of the phenomenon on which the means used in the present invention is based, it is sufficient to observe that a vehicle of average power consumes about 4 c. c. of fuel per second and that the novel pump (of usual size) delivers in the same time a volume of about 1000 c. c. The differences between the two above mentioned volumes readily explains the evaporation phenomenon of the fuel in a vacu-

um, which is the result aimed at in order to obtain the fall of temperature.

The feature of the novel pump, according to which the diaphragm effects its maximum displacement at each cycle, enables the same diaphragm to be used for two purposes. The upper face of the diaphragm cooperates with the upper compartment of the pump body chamber to form a fuel pump, whereas the lower face of the aforesaid diaphragm cooperates with the lower compartment of the same chamber to form a pneumatic (compression or vacuum) pump.

Thus, there is obtained in the same apparatus, on the one hand a fuel pump having the advantages specified above, and on the other hand a pneumatic pump forming either a source of compressed air, or a sourse of vacuum. Said source of vacuum may advantageously ensure the operation of usual depression operated apparatus, for example a wind-shield wiper. The compressed air may likewise ensure the operation of a pressure operated wind-shield wiper, which may be more powerful than a depression operated apparatus. The same pressure operated wind-shield wiper may moreover be connected on the one hand to the pneumatic pump, and on the other hand to the induction pipe of the engine. A wind-shield wiper which is operated in this manner has a power which it is impossible to obtain otherwise for the same size.

Of course, the pneumatic pump may be used for any other purpose.

In the pumps known at present, the suction and delivery nozzles are generally formed in the same part and cannot be directed in any desired direction with respect to each other. The novel pump which is the object of the present invention enables this drawback to be obviated inasmuch as the suction nozzle, for example, is carried by a part which may occupy horizontally (about its vertical axis) any required direction, whereas the delivery nozzle is provided in the central part of a cover which is independent of the part referred to above, where it is in the most favorable position for the pipe and for the flow of the fuel towards the carburettor.

It may however happen that, in spite of the control of the passage cross-section of the supply pipe by means of the piston-valve which was mentioned above, an undesirable over-pressure occurs in the delivery chamber (that might possibly flood the carburettor), which over-pressure is due to the delivery of a considerable excess of fuel.

In order to remedy this drawback, the invention provides a modification which enables the excess of fuel in the delivery chamber to return, either to the fuel supply pipe, or to a separate pipe.

In other words, the regulation, instead of being based solely on the quantity of liquid introduced into the pump, is also based on the return, before the pump inlet, of the excess of liquid which is liable to produce an undesirable over-pressure in the delivery chamber.

Finally, the invention further provides another method of distribution for obtaining the regulation of the output and of the delivery pressure of the liquid. In this latter embodiment, a simple valve controlled by a diaphragm is substituted for the piston-valve or valves placed in the passage of the liquid fuel in the induction pipe.

In the accompanying drawing, a number of embodiments of the invention have been shown diagrammatically and by way of non-limitative examples.

Fig. 1 is a vertical section of a diaphragm pump according to one embodiment of the invention;

Fig. 2 is a section of a portion of the pump illustrated in Fig. 1 and showing an embodiment of another system of regulation;

Fig. 3 is a similar section to the previous one, of a modification of said system of regulation;

Fig. 4 is a similar section to the previous ones, of another modification of the system of regulation in question;

Finally, Fig. 5 is a similar section of another embodiment.

As can be seen in Fig. 1 of the accompanying drawing, the apparatus comprises diagrammatically a frame 1 (containing the actuating mechanism of the pump), a block 2 (containing the regulation system with the evaporating chamber) and a cap 3.

In the frame 1 is pivoted at 4 the control lever 5 which is actuated from the outside by the eccentric 6 driven by the engine to be supplied. The lever 5 is engaged, with its fork-shaped end 7, with the lower part (provided with a circular groove) of a rod 8, the upper end of which is secured to a diaphragm 9 of which the edge is clamped between the frame 1 and the block 2.

A comparatively strong spring 10 constantly tends to push the diaphragm towards the upper part/its stroke, said diaphragm moving in a chamber 11 which is limited by the frame 1 and the block 2 and is separated into two compartments 11′ and 11″ by the aforesaid diaphragm. Owing to the powerful spring 10, the diaphragm 9 always effects its total displacement and the lever 5 is always in contact with the eccentric 6.

The compartment 11″ communicates with the outside through an intake valve 12 and with the delivery pipe 13 through a delivery valve 14. By reversing the mounting of the valves 12 and 14, the pipe 13 becomes the suction pipe and enables a depression operated apparatus to be actuated.

In the block 2 (in which is provided the compartment 11′ of the chamber 11) is located the supply pipe 15 for the fuel and an evaporation chamber or space 15′, the aforesaid pipe being controlled by the intake valve 16. A delivery valve 17 places the compartment 11′ of the pump in communication with a chamber 18 which is closed by the cap or cover 3, the edge of which cooperates with the upper edge of the body 2 to hold the filter 19 in position, the cover 3 carrying the delivery nozzle 20.

According to one of the essential features of the invention, the passage cross-section of the intake pipe 15 is controlled by a piston-valve 21 which is provided with an annular groove 22 for the passage of the fuel and which is subjected to the action of a suitably calibrated spring 23 which tends to keep the piston-valve 21 in the position shown in the drawing.

The upper part of the cavity in which the piston-valve 21 moves, communicates with the delivery cavity 18.

The operation of the pump which has just been described is as follows:

The various members being in the position shown in the drawing, the eccentric 6 will, during its rotation, rock the lever 5 which, as it rocks, moves the rod 8 and consequently the diaphragm 9 downwards and brings the latter into the position 9′ shown in dotted lines, said diaphragm,

during its suction displacement, compressing the spring 10.

The fuel which is sucked through the pipe 15 and passes through the annular groove 22 of the piston-valve 21, the chamber 15′ and the intake valve 16, fills the upper compartment 11′ which thus absorbs a certain quantity of fuel.

As regards the pneumatic part of the pump, the valve 14 is opened by the action of the compressed air in the lower compartment 11″ during the downward movement of the diaphragm.

As the eccentric 6 continues to rotate, the diaphragm 9, under the action of the spring 10, effects its upward stroke (delivery stroke) during which it carries with it the rod 8 which holds the lever 5 pressed against the aforesaid eccentric.

The liquid which was sucked up during the previous period is then forced into the chamber 18 through the valve 17, the fuel being evacuated at 20 in the direction of the carburettor, for example.

During the same upward stroke of the diaphragm 9, the inlet valve 12 of the pneumatic part of the device is lifted and allows a certain amount of air to enter the compartment 11″, said air being then forced out at 13 through the valve 14 during the following compression stroke.

The fuel delivered must not however exceed a predetermined pressure (in order to prevent the carburettor from flooding). This regulation of the pressure is effected by the piston-valve 21 cooperating with the calibrated spring 23. When the pressure in the compartment 18 reaches a certain value, the piston-valve 21 is forced into its housing and the upper part of said piston-valve closes more or less the passage cross-section of the pipe 15. Consequently the diaphragm is only able to suck up a portion of the fuel or even none at all if the piston-valve 21 is forced right into its housing by the pressure in the chamber 18.

In this manner the regulation of the output and of the pressure is obtained.

Owing to the fact that the diaphragm 19 always effects its complete stroke (at whatever speed the engine is operating), the volume sucked up during suction stroke of the diaphragm is always much greater than that required for the fuel consumption. When the suction pipe 15 is closed by the action of the piston-valve 21, the gasoline which is still in the chamber 15′ and in the compartment 11′ is vaporized by the effect of the vacuum created by the suction stroke of the diaphragm. This vaporization considerably lowers the temperature of the liquid, thereby contributing to cool the whole apparatus and eliminate the failures due to the vapor lock phenomenon.

It is true that during the up-stroke of the diaphragm 9, the vapors in the compartment 11′ are again condensed, but this does not occur in the chamber 15′ where the aforesaid vapors subsist and wherein the temperature remains low.

In the embodiment shown in Fig. 2, the piston-valve 21 is provided with a communication duct 24 which starts from the upper face of the valve in question and opens laterally, slightly above the annular groove 22.

It will immediately be seen that when the pressure in the delivery chamber 13 reaches a certain value, the piston-valve 21 is forced in and closes more or less the passage cross-section of the pipe 15. If the aforesaid pressure becomes too great, the piston-valve is forced further in so that not only is the chamber 15′ completely shut off from the supply pipe 15, but also the delivery chamber 18 is placed in communication, through the duct 24, with the aforesaid supply pipe 15 (or with another appropriate pipe).

The means formed by the regulation of the pressure in the delivery chamber 13 may moreover be applied independently of the method of regulation shown in Fig. 1.

In other words, and as shown in Fig. 3, it is possible to provide, in addition to the piston-valve 21 of Fig. 1, an auxiliary piston-valve 21′ which is subjected to the action of a spring 23′ and is provided with a communication duct 24′. When the pressure in the chamber 18 reaches a certain value, the piston-valve 21 moves downwards and isolates the chamber 15′ from the pipe 15. If the pressure in the chamber 18 reaches an excessive value, the auxiliary piston-valve 21′ (which is subjected to the pressure in said chamber) is in turn forced down in spite of the action of the springs 23′; it thus places the delivery chamber 18 in communication with the pipe 15 (or with another pipe) through the duct 24′ and a branch duct 25.

As shown in Fig. 4, it is also possible to design the pump with a single regulating member which does not act on the inlet, viz, a single piston-valve 21′ which is subjected to the action of a spring 23′ and is provided with a communication duct 24′, which piston-valve does not control the passage cross-section of the fuel supply pipe 15 (which cross-section thus remains constant), but solely the pressure in the delivery chamber 18.

In this case, the intake of fuel remains constant, the excess of fuel which is constantly supplied to the compartment 18 simply returning, through the duct 24′ which opens into a branch duct 25, either to the supply pipe 15, or to a separate pipe.

Finally, in the last embodiment shown in Fig. 5, regulation of the output by means of a piston-valve has been completely eliminated and regulation by means of a valve 24 provided with a weak spring 25 substituted therefor. Said valve 24 is in touch with a rod 26, the other end of which is in contact with a circular diaphragm 27 lodged in a cavity 28 of corresponding shape in the cover 3, with a spring 29 interposed between the diaphragm and said cover.

This device operates in the following manner:

When the pressure below the cover at 18 reaches a predetermined value, it acts on the diaphragm which pushes back the spring 29. At the same time, the small spring 25 lifts the valve 24 which closes more or less or even completely the passage for the liquid in the pipe 15.

When the pressure below the cover 3 falls, the spring 29 pushes back the diaphragm 27 which acts through the rod 26 on the valve 24 which compresses the spring 25 and the passage 15 is thus opened more or less.

LOUIS GUICHARD.

PUBLISHED

MAY 11, 1943.

BY A. P. C.

L. GUICHARD

DIAPHRAGM PUMPS FOR FEEDING FUEL TO EXPLOSION ENGINES

Filed June 5, 1940

Serial No. 339,025

2 Sheets-Sheet 1

FIG. 5

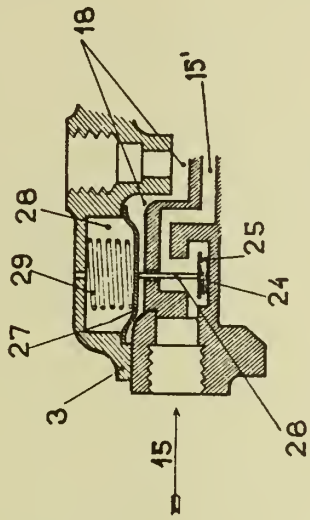

FIG. 1

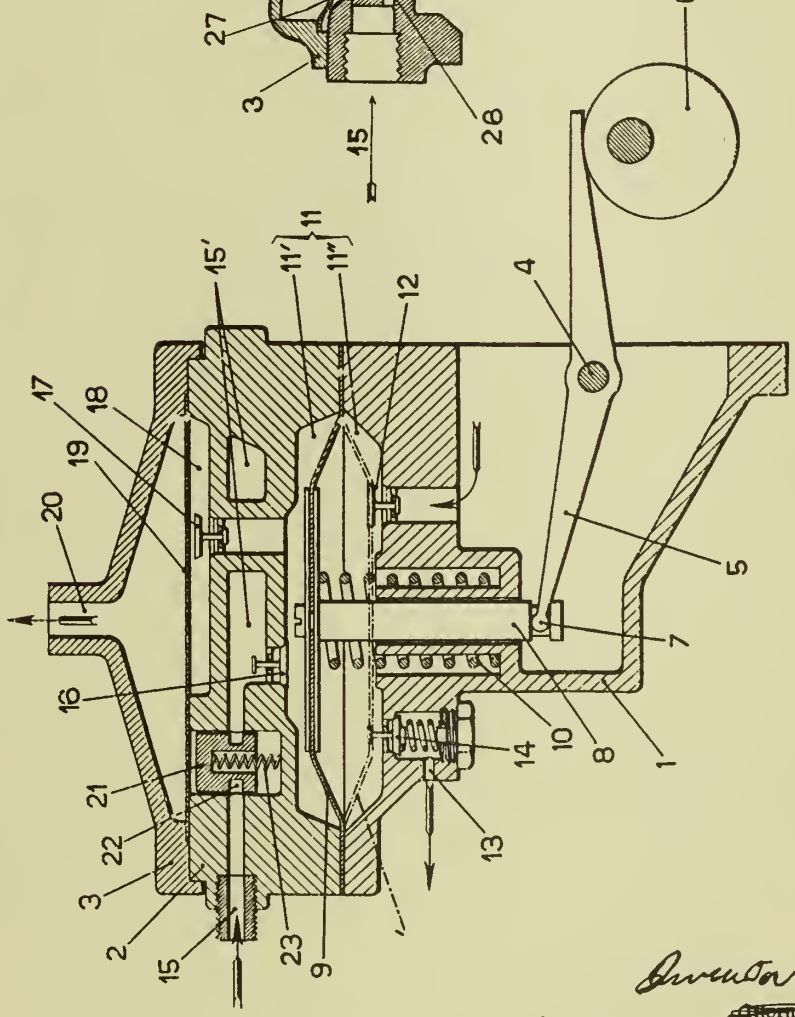

Inventor

~~Attorney~~

L. Guichard

By

E. F. Wenderoth, Atty

~~Inventor~~

PUBLISHED

MAY 11, 1943.

BY A. P. C.

L. GUICHARD

DIAPHRAGM PUMPS FOR FEEDING FUEL TO EXPLOSION ENGINES

Filed June 5, 1940

Serial No. 339,025

2 Sheets-Sheet 2

FIG.2

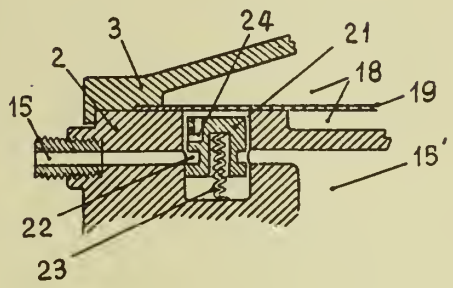

FIG.3

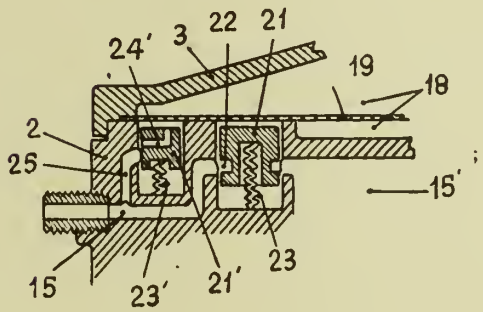

FIG.4

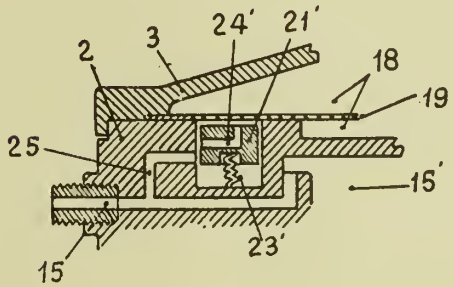

Inventor

L. Guichard

By

E. F. Wenderoth

Atty.

Published May 11, 1943

Serial No. 339,132

ALIEN PROPERTY CUSTODIAN

PROCESS FOR THE INTRODUCTION OF CHROMIUM INTO IRON OR STEEL ARTICLES

Gottfried Becker, Buderich bei Dusseldorf, Karl Daeves, Dusseldorf, and Fritz Steinberg, Dusseldorf-Eller, Germany; vested in the Alien Property Custodian

Application filed June 6, 1940

This invention relates to improvements in or relating to a process for the introduction of chromium into iron or steel articles.

As it is known, the surface of iron and steel articles may be enriched in chromium by diffusion. This was done, according to previous methods, by packing the articles in chromium powder or ferrochrome powder and then heating the whole for many hours to very high temperatures, e. g. 1200 to 1300° C. Vaporisable chromium compounds are recently used for the introduction of chromium and especially vaporous chromium chlorine compounds, out of which chromium chloride has proved to be peculiarly suitable. By using vaporisable chromium chlorine compounds a considerable reduction of the high treating temperatures and of the treating period has been obtained, e. g. the treating temperature has been reduced to 1000° and the treating period to some 5 hours, in the course of which good chromium layers may be obtained on the surface to depths of 0.1 mm on an average.

The procedure of the chromium diffusion and the quality of the chromium layers formed on the surfaces also depend upon the composition of the materials to be treated, in so far as it is known that the chromium diffusion is rendered difficult with increasing carbon content of the same. For this reason, iron alloys having not more than 0.2%, possibly not more than 0.1%, have so far been demanded for the introduction of chromium.

However, experiments on a large scale have shown that a low-carbon prime material alone does not lead yet to a good progress of the introduction of chromium and to useful surfaces, because, as it has been found, such results do not depend upon the proportion of carbon but upon the total amount of the carbon in the material. It has been found that, when introducing the chromium, migration of the carbon from the interior of the cross section towards the surface takes place, and this migration is the stronger, the greater the carbon of the cross section. Thus, for instance, it is not possible, when the diffusion is carried out under the usual conditions, to produce satisfactory layers on an article made from steel of about 0.02% carbon content and having a wall size of about 10 mm, whereas very good and tough chromium zones are obtainable on the same steel and under the same conditions, if the article has a wall size of some 2 mm. This clearly demonstrates that, with respect to the diffusion process and the quality of the chromium layers formed on the surface, the wall size of the articles to be treated and the carbon content of the material to be treated depend upon each other and that there must be certain limits in this function, above which no useful chromium layers and below which very useful ones may be obtained. In view of the fact that it has been ascertained by previous experiments that the disadvantageous influence of the carbon may be suppressed by adding certain alloying elements to the iron, e. g. titanium, vanadium, niobium, manganese or aluminium, it is possible in each case—making use of the firm relation existing between the wall size and the carbon content of the articles to be treated—to produce with absolute certainty and in a most economic way useful chromiferous surfaces on iron or steel articles even higher carbon content and with an ample wall size tolerance.

The firm relation existing between the wall size and the carbon content with respect to the diffusion process and the quality of the chromium layers formed on the surface is, according to the invention, determined by the equation $a.b=F(b)$, in which equation a is the wall size in millimetres and b the percentage of the carbon content. If $F(b)$ exceeds a certain value in this equation, satisfactory chromium layers can no longer be produced on the surface of articles from pure iron-carbon alloys, i. e. there will result, when the diffusion is carried on under the usual conditions, chromiferous zones, which are brittle and have a relatively low resistance to corrosion. However, according to the present invention, this can be counteracted by adding to the alloys having such a value of $F(b)$ certain elements, which suppress the migration of the carbon in the cross section, e. g. titanium, manganese, niobium or aluminium.

The value of $F(b)$, above which the quality of the chromiferous surfaces is no longer satisfactory without additional alloying steps, and below which there will result in each case very good and useful chromiferous surfaces, may be substituted, in a manner which is absolutely sufficient for practise, for three roughly graduated ranks of carbon content by certain constants. For the lowest range of carbon up to about 0.05% C this constant is 0.08, for the range of about 0.1% to about 0.4% C this constant is 0.12, and for a range of 0.5 to about 1.5% C the constant is 0.17. These constants representing practical approximations only, they are subject to a variation of +0.02 max.

The drawing graphically illustrates in detail the reciprocity between the diffusion process and the quality of the chromium layer on the sur-

face on the one hand and the wall size of the articles to be treated and the carbon content of the iron-carbon alloy from which they are made on the other hand.

In the diagram the curve AB indicates the limiting value of the product of the wall size and the carbon content of the articles to be treated, up to which value it is possible to produce by diffusion specially good chromiferous surfaces on non-alloyed iron or steel. The space between the curve AB and the co-ordinates encloses therefore the conditions which are to be observed in case of non-alloyed kinds of iron and steel in order to obtain chromium zones which can stand e. g. strong deformations like bending radius of about 2 mm. and which fully resist considerable wet corrosion. (Test in the salt water spray box.)

If it is intended to obtain the same properties of the chromiferous surfaces in case of wall sizes and carbon contents on the right hand of the curve AB, it is, according to the invention, no longer possible to use pure iron or steel for the production of the articles to be treated, but it is necessary to use iron-carbon alloys, which contain additions of titanium, vanadium, niobium or of elements of similar effect, and that at least up to such an amount that the total carbon content of the alloy is bound by them. The same effect can also be obtained by adding manganese or aluminium, e. g. in form of an alloy which contains, apart from about 0.1% carbon, about 3% manganese.

The transition of the properties of the chromiferous surfaces from the space on the left hand of the curve AB to the space on the right hand of the curve is not sudden, but between the curve AB and a further curve CD having a constant value for $F(b)$ which is by 0.06 higher, there is a space in which also non-alloyed kinds of iron and steel may still be coated by chromiferous layers which stand average deformations like light bending etc. and which resist humid air. This resistance is also indicated by non-corrosion in 30 percent hot nitric acid. If, therefore, it is intended to obtain chromiferous surfaces of this average quality only, the articles to be treated can be made of non-alloyed sorts of iron and steel and the carbon content of the same can be arranged with respect to the wall size of the articles so as to observe the conditions of the space between the curves AB and CD.

Whilst chromiferous surfaces of the good properties of the space on the left hand of the curve AB can be well obtained in the space on the right hand of the curve CD by completely binding the carbon content of the used alloys by means of titanium, vanadium, niobium or the like, chromium zones of the properties corresponding to those which are met in the space between the curves AB and CD can also be obtained on the right hand of the curve CD, by adding to the iron-carbon alloys from which the articles are made smaller quantities of titanium, vanadium, niobium or the like than it is necessary for completely binding the carbon content of the alloys.

To recapitulate the invention first discloses the knowledge that, with respect to the diffusion process and the quality of the chromium layers produced on the surfaces, the wall size and the carbon content of the articles to be treated depend on each other, and it further indicates those conditions which must be observed in order to obtain with certainty and highest economy those properties of the articles, into which the chromium has been introduced, which are demanded in each individual case. At the same time the method according to the invention is valid for each kind of the introduction of chromium by diffusion, i. e. for the diffusion in pure metallic condition as well as for the diffusion by means of vaporisable or vaporous chromium compounds, specially chromium chlorine compounds.

GOTTFRIED BECKER.
KARL DAEVES.
FRITZ STEINBERG.

PUBLISHED

MAY 11, 1943.

BY A. P. C.

G. BECKER ET AL
PROCESS FOR THE INTRODUCTION OF CHROMIUM
INTO IRON OR STEEL ARTICLES
Filed June 6, 1940

Serial No.
339,132

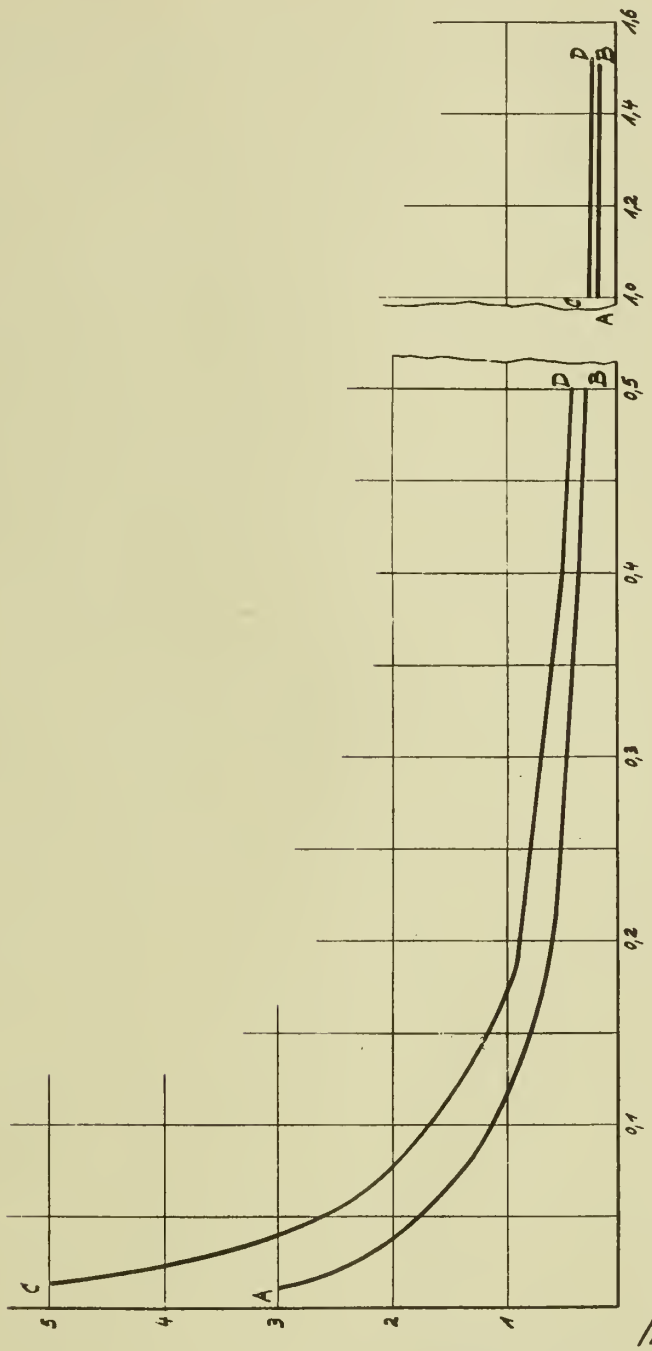

Inventors
Gottfried Becker, Karl Daeves
and Fritz Steinberg
by Knight Bros attorneys

Published May 11, 1943

Serial No. 340,187

ALIEN PROPERTY CUSTODIAN

LAMINATED TUBES

Matthäus Braun, Frankfurt am Main, Germany;
vested in the Alien Property Custodian

Application filed June 12, 1940

This invention relates to the manufacture of laminated iron or steel tubes made from strip material having its entire surface preliminarily coated with copper or brass by any suitable means such as vulcanizing, plating, or other procedure.

It has already been proposed to manufacture laminated tubes from strip material by rolling the layers together, but tubes made in this way have the disadvantage that there are always exposed sections or joint edges of the sheet metal strip in the interior of the tube, which edges, particularly when plated metal strip is used, are not coated with any corrosion preventing layer and thus present a permanent place of attack to corroding influences.

It is an object of the present invention to overcome this disadvantage. According thereto a strip of sheet steel which has been previously coated with copper or brass is shaped in such a way that three laminations of metal are superposed whereby the wall thickness of the tube is three times the thickness of the metal strip. Since the strip is originally coated with copper or brass, not only is a fine layer of copper or brass provided between all the contact places, but also the copper or brass layer covers all bends and edges and prevents any direct contact between the iron and corrosive materials.

Referring to the drawings:

Figure 1 is a cross-sectional view of a partially worked blank,

Fig. 1*a* is a cross-sectional view of the blank of Fig. 1 showing a blank worked at a previous stage,

Fig. 2 is a cross-sectional view of a rolled tube,

Fig. 2*a* is a cross-sectional view of the tube of Fig. 2 on an enlarged scale,

Figs. 3 to 5 are cross sectional views of a modified tube in three stages of manufacture,

Fig. 6 is a diagrammatic view of the apparatus for manufacturing the tube of Figs. 3 to 5,

Fig. 7 is a cross-sectional view of a modified tube at one of its stages of manufacture, and

Fig. 8 is a cross-sectional view of the completely rolled tube of Fig. 7.

In carrying out the invention the steel strip previously coated with copper or brass is shaped in successive dies or sets of rolls in a manner which will be understood from Fig. 1, which shows a blank which is already of tubular form in the middle. This form is reached in stages, the steel strip being first given the shape shown in Fig. 1*a*, and then bent about the middle point *a* into the shape shown in Fig. 1, having a central tubular portion *f* and wide lateral fins d^1, d^2 at one side and e^1, e^2 at the other side. The said fins are of such length that each corresponds to half the circumference of the tube. The two edges *b* and *c* are welded together to complete the blank shown in Fig. 1.

In the next operation the fins *d* and *e* are bent around the tubular portion *f* each in same direction, so as to lie snugly against the outer walls of said tubular portion, thus producing the triple layer tube shown in Fig. 2, and on a larger scale, in Fig. 2*a*. It will be seen that the interior wall of the tube is everywhere coated with the corrosion resisting layer, particularly at the joint places between parts d^1, d^2, *f* and e^1, e^2 and *f*. There is no exposure of the steel of the metal strip anywhere. Instead of having two fins each of semi-circumferential length, three or more fins each of correspondingly shorter length may be used and Figs. 3, 4 and 5 illustrate, for example, the use of four such fins each being of a length corresponding to a quarter of the circumference of the tube.

The manufacture of tubes according to the invention may be carried out in an apparatus which is shown diagrammatically in Fig. 6. The steel strip is drawn from a roll *g* through dies *h* which impart to the strip the form shown in Fig. 3, then through dies *i* which give the blank the form shown in Fig. 4, and finally through dies *k* which give the blank the shape shown in Fig. 5. *l* and *m* are feed rolls located in front of the dies *h* and other feed rolls o and *p* are provided behind the dies *k* for feeding the formed tube into a muffle furnace *q*. The tube is passed in a continuous operation through the furnace the temperature of which is held at the fusion temperature of the coating metal. Since the surfaces of the strip are in close contact with each other as a result of the previous operations, the thin metal coating, if desired with addition of flux material flows into the joints and welds or brazes the various layers together. Thus all the laminations are fused together into a unit and form a closed tubular article which is desired may be subjected to further drawing to a tube of smaller diameter.

Another modification is shown in Fig. 7 in which the first formed blank has only a single fin, which fin is of sufficient width to cover the entire circumference of the tubular portion *r* when bent around the same. For this purpose the strip of steel sheet, previously coated with copper or brass, is shaped in a sequence of dies or sets of rolls to the blank form shown in Fig. 7, the center portion of the strip being preshaped into tubular form as shown at *r*. The end portions *s*

and *t* of the strip form the fin extending from the circumference of the tubular part and correspond in length to the circumference of said part. The fin portions *s* and *t* are bent at the point *u* and lapped around the cylindrical portion *r* until the ends of the fin portions arrive at the joint place *v*. In this manner there is formed a triple laminated tube of layers *r*, *s*, *t* with only a single joint at *v*. The ends of the two fin portions are welded together. It will be seen that the entire inner surface of the tube is devoid of any places where the steel of the sheet metal strip is exposed. The whole inner wall and particularly at the joint place is protected by a coating of copper or brass. Furthermore, it will be noted that the joint edges of the strip material are in the outer wall of the tube.

MATTHÄUS BRAUN.

PUBLISHED
MAY 11, 1943.
BY A. P. C.

M. BRAUN
LAMINATED TUBES
Filed June 12, 1940

Serial No.
340,187
2 Sheets-Sheet 1

Fig. 1

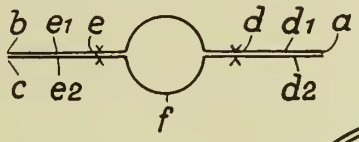

Fig. 2

Fig. 2a

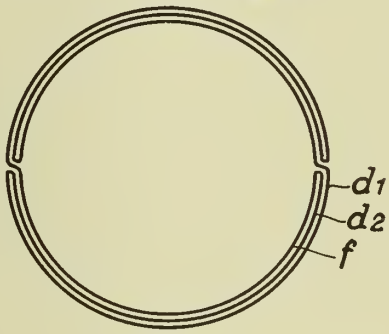

Fig. 1a

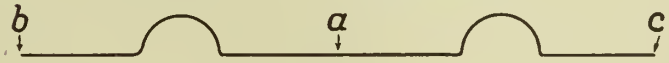

Fig. 3

Fig. 4

Fig. 5

Fig. 6

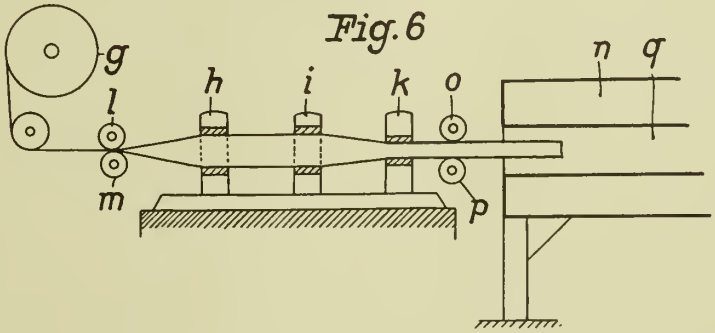

Inventor:
Matthäus Braun
By Young, Emery & Thompson
Attorneys

PUBLISHED	M. BRAUN	Serial No.
MAY 11, 1943.	LAMINATED TUBES	340,187
BY A. P. C.	Filed June 12, 1940	2 Sheets-Sheet 2

Fig. 7

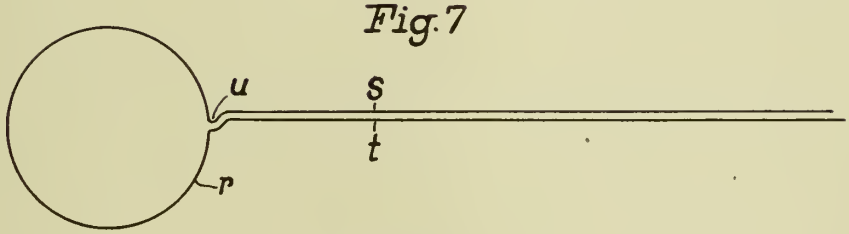

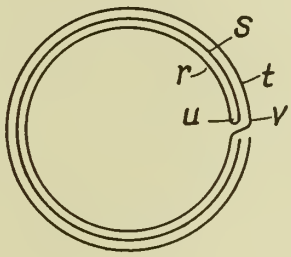

Fig. 8

Inventor:
Matthäus Braun
By Young, Emery & Thompson
Attorneys

Published May 11, 1943 Serial No. 340,476

ALIEN PROPERTY CUSTODIAN

THERAPEUTICALLY VALUABLE CALCIUM SALT DISSOLVED IN OIL AND A PROCESS FOR THE PRODUCTION THEREOF

Béla Moskovits, Budapest, Hungary; vested in the Alien Property Custodian

No Drawing. Application filed June 14, 1940

The invention relates to a therapeutically valuable calcium salt of a specific naphthenic acid separated from the crude naphthenic acids and dissolved in oil. The material known as crude naphthenic acid consists of a mixture of several acids, one of them showing the property of forming a precipitate by the action of dry ammonia gas on it in a solution of ethyl ether and this is a proved test for that acid.

It has been found that the solution of the calcium salt of the said naphthenic acid in oil is of considerable value for the treatment of catarrhal diseases.

For the treatment by injections solutions of the said calcium salt in vegetable oils (e. g. sesame or olive oil) and for external treatment solutions in mineral oils (e. g. paraffin oil) are used.

Preferably the solution of the said calcium salt in vegetable oil contains also other substances being therapeutically valuables for the treatment of catarrhal diseases e. g. camphor, menthol, quinine, etc.

For external treatment a solution of 1% of the said calcium salt is used in paraffin oil.

An advantageous composition for injections contains:

	Grammes
The said calcium salt	0.60
Sesame or olive oil	5.90
Eucalyptus oil	2.00
Oleic acid	0.20
Menthol	0,75
Camphor	0.25
Quinine	0.30

In the process according to the invention crude naphthenic acid is esterified by any known method and the ester of the specific acid showing the said test-reaction with dry ammonia gas is separated by fractionated evaporation. The separated ester is then saponified and a solution of a water soluble calcium salt (e. g. $CaCl_2$) is added to the pure solution of the saponified ester, the latter being converted thereby to a precipitate consisting of the calcium naphthenate aimed. The precipitate is separated, washed and dissolved in oil.

Preferably the crude naphthenic acid is converted into a mixture of the methyl esters of the components, the mixture being then fractionated between 200 and 250° C. The separated fraction is subjected to a further fractionation between 220 and 235° C and consists the latter fraction practically of the methyl ester of the naphthenic acid the calcium salt of which is to be produced. The ester is saponified and converted to the said calcium salt by the action of $CaCl_2$.

The said calcium salt is dissolved in vegetable oils preferably at 130° C.

Example

To 1850 grammes of a water-free crude napthenic acid 1850 cubic centimetres of absolute methyl alcohol are added. The solution is cooled by ice and saturated with dry HCl gas and left to stand overnight. The alcoholic solution is separated from the oil, the solution is diluted with a four or five fold quantity of water, the oil separated thereat is added to the oil already separated and is washed four or five time with 1–1 litre of water. The obtained quantity of about 1200 grammes of methyl esters are fractionated and the fraction between 220 and 235° C of about 800 grammes is separated. This fraction is subjected to a further fractionation between 200 and 235° C and a product of about 450 grammes is obtained consisting practically only of the methyl ester of the naphthenic acid aimed the free acid showing in a solution of absolute ether the test reaction with dry ammonia gas. 460 grammes of this ester are boiled with a solution of 190 grammes of KOH in a mixture of 330 cubic centimetres of water and 330 cubic centimetres of ethyl alcohol on a water bath during 5 to 6 hours and then diluted with 6 to 7 litres of water. The solution is left to stand for a day and after being clarified a further quantity of water is added until no further muddiness is caused. The whole is then filtered and a solution of 20% $CaCl_2$ is added in abundance. The whole is left to stand for a day and the precipitate is washed with water. The precipitate is then picked up with ether, washed with water two or three times, the ether is evaporated and the salt dried.

For injections 0.6 grammes of the calcium salt obtained are dissolved at about 130° C in 5.90 grammes of sesame or olive oil and a mixture of 2.00 grammes of eucalyptus oil, 0.20 grammes of oleic acid, 0.75 grammes of menthol, 0.25 grammes of camphor and 0.30 grammes of quinine are added.

For external treatment a quantity of 1% of the calcium salt obtained is dissolved in paraffin oil.

BÉLA MOSKOVITS.

Published May 11, 1943

Serial No. 340,837

ALIEN PROPERTY CUSTODIAN

PROCESS OF OBTAINING COLD GLUE AND CASTOR OIL FROM CASTOR BEANS

Felix Grandel, Emmerich/Rhein, Germany; vested in the Alien Property Custodian

No Drawing. Application filed June 15, 1940

This invention relates to a process of obtaining cold glue and castor oil from castor beans.

It is already known to prepare cold glue of castor albumen.

The castor albumen required for this purpose is obtained by lixiviating with alkalines, acids or other substances extraction residues of castor beans, which consist of

	Percent
Raw protein	20.44
Water	9.85
Raw fat	5.25
Raw fibre	49.44
Ashes	15.02

which are obtained as a poisonous and troublesome by-product in the manufacture of castor oil, the albumen being precipitated from the resulting solutions. In any one of these processes, the albumen contained in the extraction residue of the castor beans is, in doing so, to be delivered from ballast substances, such as cellulose (raw fibre), starch, mineral substances, etc. A direct preparation of cold glue from the extraction residues is impossible due to the ballast substances, because merely the albumen will form the desired insoluble cold glue with the hydroxide of calcium.

It has now been found that from oleaginous fruits containing high percentage of albumen, e. g. from castor beans, albumen can be obtained, which is excellently suitable to be used for the preparation of cold glue, provided that the most impotrant ballast substance of the castor beans, viz. the cellulose (raw fibre) represented by the husks, is previously removed, whereupon in accordance with already known processes the decorticated castor beans are worked so by first crushing and extracting them, that castor oil and extraction residues are obtained. When the castor beans are thus peeled and at the same time the raw fibre substances are consequently removed, an increased enrichment of albumen is brought about, which thereupon is still considerably increased by the oil-separating process. Whereas standard castor beans are composed as stated above (cf. "Handbuch der Öle und Fette"—Manual of Oils and Fats—by L. Ubbelohde, vol. II, p. 155, year 1920), after decortication and extraction a light-coloured residue is obtained, which, for instance, consists of

	Percent
Protein	70.35
Water	10.44
Starch	8.64
Ashes	7.54
Raw fibre	2.25
Oil	0.80

By the elimination of the black castor peels, which preferably is carried through under the method set forth in applicant's and W. Imkamp's copending patent application "A process and suitable devices for husking seed, especially oil seed" the substances containing pigments, which are soluble in water and partly also in fat, are also removed, which, for instance, would again impart a dark shade to the albumen which can be obtained by lixiviation. It is also unnecessary in future to purify and bleach the extracted castor oil which hitherto was dark-coloured.

It has, moreover, been found that the light residues of the castor beans which are free of peels, can be used for the direct manufacture of cold glues offering excellent qualities, if the residues are mixed with the well known components of cold glue, e. g. sodium carbonate, borate of sodium, ammonia, sodium fluorite, and the like, but to the exclusion of hydroxide of calcium and of other calcium components, and that, if advisable, the mixture is, together with water, broken-up with the aid of pressure and agitation. By finely-grinding up the light extraction residues of castor beans, which are free of peels, well sticking cold glue is, however, also obtained without this breaking-up operation by means of heat and alkalines, if an adequate quantity of calcium-hydroxide is added to the above mentioned mixtures forming either a powder or a paste.

The cold glues thus prepared possess qualities which are superior to those cold glues which are made of lactic casein, in particular with regard to their shearing strength, when dried. It is a surprising fact that the ballast substances which still further continue to be contained in the cold glue, such as starch, mineral substances, residues of raw fibre, are not detrimental, especially so, provided that a breaking-up operation is still carried through with the well known components of cold glue.

The breaking-up operation need not take place immediately, but can also be carried through only a short period prior to the preparation of the cold glue, i. e. shortly before the calcium hydroxide is added. The light extraction residues of the castor beans thus obtained, which are free of peels, are thereafter in a most finely ground condition mixed with the components of cold glue (to the exception of hydroxide of calcium and other calcium components) in a dry state and at room temperature and are stored free of water. It is, however, also possible to add water and preserving substances immediately after grinding at room temperature, and will in this manner obtain the so-called cold glue pastes. The third alternative of preparing cold glue is to break-up

the aqueous paste in a hot condition and also under pressure, if necessary, i. e. that the cellular construction of the extraction residues of the castor beans, which partially still exists, will be destroyed, the albumen laid open and be caused to swell up.

The final products contained after the breaking-up operation, which are of a pasty or pulpy character, can then either be used immediately as a pasty cold glue preparation, or can be dried and ground, whereby a homogeneous cold glue powder is formed. Preferably, however, the pulpy broken-up material is passed through a spray-dryer equipment, as the grinding of the dried material can thus be dispensed with.

EXAMPLES

(1.) Cold glue powder

The light-coloured residues of castor beans, which must be free of peels, are ground in a rolling-balls grinding mill, until a dust-like powder is obtained. In order to perform the grinding operation quicker, it is also possible to grind the residues in a "Colloplex" mill. In order to pick-out coarser particles, the powder thus obtained is passed through a close-meshed sifting screen. In order to prepare a non-dusting cold glue, mineral oil and also components of cold glue are admixed to the castor beans-extraction powder, i. e. that the following components are mixed:

	Kilograms
Castor beans-extraction powder	6,9
Calcium hydroxide	2,0
Sodium fluoride	0,5
Sodium sulphite	0,3
Petroleum	0,3

In order to prepare cold glue, one part of this powdered cold glue is mixed by stirring with two parts of water at blood temperature. Prior to using the cold glue, it is highly advisable to allow it to swell for half an hour.

(2.) Cold glue paste

Most finely ground powder of castor beans—prepared according to the description given in example 1.)—is mixed with the components of cold glue to the exception of calcium hydroxide, whereupon a paste is made of it with a 2% solution of ammonia. When acting accordingly, an admixture of petroleum can be dispensed with, because dust cannot be formed.

6,5 kilograms of castor beans-extraction powder are mixed with
0,5 kilograms of trinatrium phosphate,
0,4 kilograms of sodium fluoride,
0,5 kilograms of sodium sulphite,

whereupon a paste is made of this powder with 8 kilograms of a 1% ammonia solution, in which 0,01 kilogram of Raschit W have been dissolved.

In order to prepare a cold glue of this paste, it is necessary to mix by stirring two parts of the paste with one part of water, in which 0,225 parts of calcium hydroxide have been suspended.

(3.) Broken-up cold glue paste

6,4 kilograms of castor beans-extraction powder are mixed with
0,9 kilogram of sodium fluoride,
0,1 kilogram of borax, and
0,1 kilogram of sodium sulphite.

The mixture is admixed by stirring to 15 kilograms of water, this latter mixture being heated for about half an hour in a vat under pressure up to 110 degrees Celsius. Thereupon the autoclave is emptied, which will deliver the finished paste. In order to obtain therefrom cold glue 225 grams of the paste are mixed with a suspension of 25 grams of calcium hydroxide in 25 cubic centimeters of water.

(4.) Broken-up powder of cold glue

6,9 kilograms of castor beans-extraction powder are mixed with
0,9 kilogram of sodium fluoride, and
0,1 kilogram of sodium carbonate,

and are diluted by stirring in 16 kilograms of water, whereby a pulp is formed, which is broken-up in an autoclave for half an hour at an over-pressure of half an atmosphere. The product resulting from the reaction is then diluted with such a quantity of water, as will still be necessary, whereupon the water is expelled from it by means of an atomising dryer equipment. The dried powder thus obtained is mixed with 2,1 kilograms of calcium hydroxide, and, in order to prevent the formation of dust, with 0,2 kilograms of petroleum. In order to prepare cold glue, one part of dry powder is mixed by stirring with two parts of lukewarm water at a temperature of 40 degrees Celsius.

FELIX GRANDEL.

Published May 11, 1943

Serial No. 341,835

ALIEN PROPERTY CUSTODIAN

PRESS OPERATING CONTINUOUSLY FOR MORTAR, CONCRETE AND THE LIKE

Alberto Falasconi, Fermignano, Italy; vested in the Alien Property Custodian

Application filed June 22, 1940

The present invention relates to a press actuated with compressed liquids or gases, with continuous operation, adapted for the conveyance and the application of cement, mortars, concrete and the like.

In the accompanying drawing, showing by way of example a press according to the invention.

Fig. 1 shows an outer general view of the press, and

Fig. 2 shows in part a longitudinal section through all the essential elements of same.

The body of the press is formed by a central driving cylinder indicated with A on both the figures, to which are connected two co-axial side cylinders C, the diameter of which is smaller than that of cylinder A. In the smaller cylinders moves an equipment comprising three pistons mounted on a single piston rod E, P being the central piston, and *p, p* the side pistons.

The distributor D determines both the alternate movement of the central driving piston P, and the movement of the rotary valves V, provided at the exit of the side cylinders C.

Said distributor D comprises a cylinder 1 (Fig. 2) provided on its surface with three pairs of holes (not shown in the figures) two of which are disposed oppositely in the horizontal plane, for the reception and the discharge of the driving fluid, the third pair being disposed on the bottom portion thereof at an angle of 90° with respect to the other two, or in the vertical plane, for providing a permanent communication of the outside thereof with the central cylinder.

The small cylinder 2 for controlling the distributor D, is traversed by three bent channels having a circular cross section, the middle of which has its horizontal hole directed towards the pair of discharge holes, while the two side channels have their openings disposed horizontally and directed in front of the inlet of the fluid; the rear holes of these three channels being aligned and orientated towards the driving cylinder A.

In Fig. 2, the central discharge channel is shown in full lines and the two side chanels are shown with broken lines.

To each of the two extreme positions of pistons 2 inside the cylinder 1, correspond on the two faces of the central driving piston P, a charging phase and a discharging phase.

In the position shown in Fig. 2, the right hand face of the piston is in the phase of charge, while the left hand face is in the phase of discharge.

The displacement of piston 2 of the distributor D, is determined by two forces acting successively on it, the first of said forces being due to the mechanical action of the driving piston P at the end of its stroke, by means of percussor 4, lever 5 and button 6 placed on the rod of the distributor.

The second of said forces is due to the hydraulic or pneumatic action of the driving fluid through the entrance hole 7, mushroom valve 8, and channel 9.

The opening of valve 8 is in its turn produced by the lever 5, which, at a given point of its angular right hand movement, presses on to the percussor 10, against the action of the antagonistic spring 11, until the mushroom valve 8 is lifted against the action of the antagonistic spring 12, thus opening the inlet for the free entrance of the driving fluid on the left hand face 13 of the piston of the distributor.

A special feature of the device above described, consists in the fact that mushroom valve 8 has a tubular rod provided with holes in correspondance with channel 9, so that, during the periods of rest, the fluid contained into the small chamber 13, discharges to the outside through outlet hole 14, so that when the percussor 10 comes into action it closes in its front side the hole of the tubular rod, which produces the isolation of the small chamber.

The longitudinal displacement of the distributor's piston 2, the value of which is equal to the distance between two consecutive openings, is transformed, by means of a connecting rod and of a crank, in a rotatory movement of discs M, which in their turn, by means of the rods T (Fig. 1), produce the rotation through 90° of the rotors of valve V.

These valves V are constructed essentially with a stator drum, fixed to the end cylinder C, provided in its outer portion with three openings, two of which are coaxial with the press, and the third disposed upwards through an angle of 90° with respect to the others. A shutting sector 15, the angular amplitude of which is sufficient to ensure the closing of one opening only, may assume two different positions, disposed at an angle of 90° with respect to each other. In Fig. 2, the position of sector 15 is shown in the position for closing upwards the opening or suction valve, and consequently the position of the valve corresponds to the phase of discharge.

In the other extreme position of the distributor, the shutting sector 15, closes the discharge or delivery opening, and consequently this phase will be the suction phase. The sector 15 is fixed

on two side discs adapted to close the stator tightly, each of which carry two pivots 16, on which the rods *t* are pivoted, and an axis passing through the covers G (Fig. 1).

The counterweights Q, mounted on the adjustable arms *b* (Fig. 1), are integral with the valve rotors formed as described, said arms being connected through the pivots 16.

These counterweights ensure the displacement of the whole system, and allow the sector, made of steel, and having cutting edges, to break up or crush any stones, which may eventually prevent the rotation thereof.

With regard to the operation of the press above described, in Fig. 1, R indicates a charging hopper communicating with the two suction tubes T, which in their turn communicate with valve V, operated by the pistons *p*.

The whole machine may be mounted on four wheels, to facilitate its transportation to the construction yard.

ALBERTO FALASCONI.

PUBLISHED

MAY 11, 1943.

BY A. P. C.

A. FALASCONI

PRESS OPERATING CONTINUOUSLY FOR MORTAR, CONCRETE AND THE LIKE

Filed June 22, 1940

Serial No. 341,835

Fig. 1

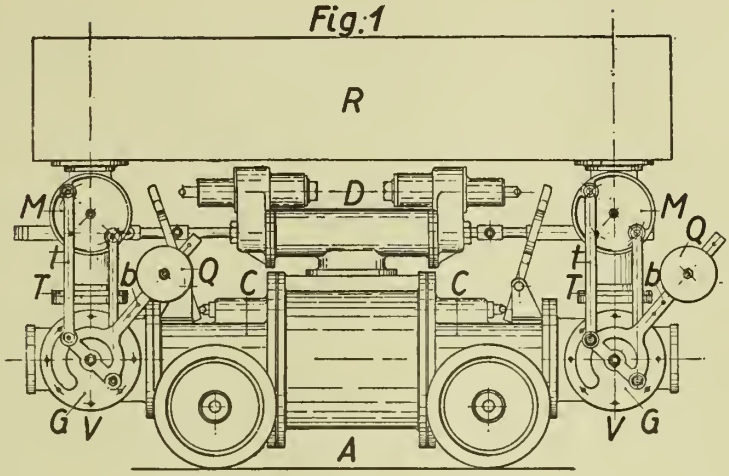

Fig. 2

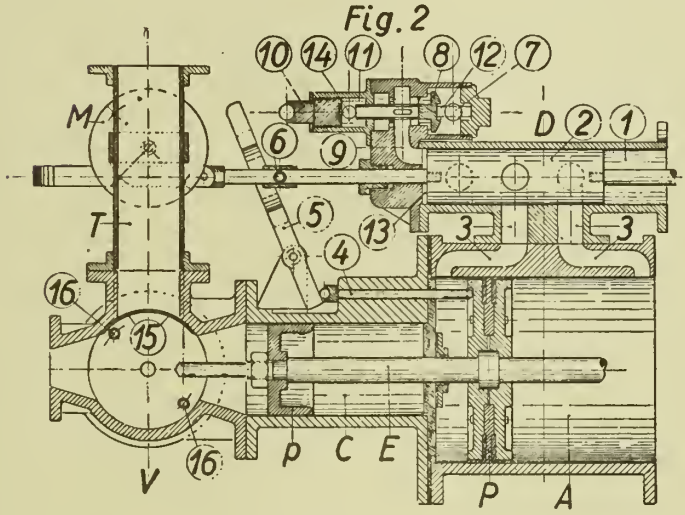

T.I.

INVENTOR:
ALBERTO FALASCONI
BY Haseltine, Lake & Co.
ATTORNEYS

Published May 11, 1943 Serial No. 342,112

ALIEN PROPERTY CUSTODIAN

HIGHLY REFRACTORY BUILDING MATERIAL AND METHOD OF MAKING SAME

Kristoffer Johannes Stenvik, Oslo, Norway; vested in the Alien Property Custodian

No Drawing. Application filed June 24, 1940

It is known to manufacture refractory building materials which contain substantial amounts of tricalciumsilicate, Ca_3SiO_5, or in which tricalciumsilicate is the main constituent. For instance, such refractory materials have been manufactured from dolomite, special care being taken that the building material shall be as free as possible from uncombined calciumoxide and from calcium orthosilicate, Ca_2SiO_4, in order that the building material on the one hand should be stable with regard to the action of water and on the other hand that it should not be destroyed by the polymorphic transformation of Ca_2SiO_4. It is known to manufacture such building materials from dolomite, adding fluxing agents which contain silicon, aluminum, iron and chromium. In such manner refractory building materials have been made which apart from tricalciumsilicate, contain aluminates, ferrites, and alumoferrites which crystallize separately, as has been found by means of observations on the microstructure of those materials.

A great difficulty in the industrial utilization of such materials which have been manufactured from dolomite or from limestone, consists in that these materials are subject to softening at comparatively low temperatures for instance it is known that such materials break down under a load of 2 kg/cm^2 at a temperature of not more than 1600° C.

This difficulty can be understood, if one considers that the ferrites and aluminates of calcium are melting already at temperatures of 1425° C.–1536° C., wholly or in part, and that the melting temperatures of mixtures of $Ca_4Al_2Fe_2O_{10}$ aand tricalciumsilicate, which are melting still more easily, are still lower namely about 1350° C. A building material which contains substantial amounts of such ferrites and aluminates in separate crystals is partly liquified already at temperatures between 1400° C.–1500° C., and by means of that liquification it looses its mechanical strength and softens.

While until now the compounds of trivalent metals in refractory products from dolomite were found predominatingly in the form of independent crystals which are relatively easily fusible, the present invention is based upon the principle that one manufactures refractory building materials in which calcium trisilicate and the compounds of calcium and the trivalent metals form mixed crystals (solid solutions) which are very much more refractory than the mechanical mixtures of tricalciumsilicate and aluminates, ferrites and the like. From these mixed crystals one can manufacture highly refractory materials which can be used under load, even at temperatures of 1700° C., and which are extremely stable against the action of moisture, and which are not subject to any objectionable transformation, such as caused by the presence of Ca_2SIO_4.

The manufacture of refractory mixed crystals from tricalciumsilicate and the compounds of calcium oxide with the oxides of trivalent metals, such as aluminum, iron and chromium, may be suitably carried out according to the following methods. First one has to regulate the chemical composition of the raw materials in such a manner that the compounds of calcium and trivalent metals, for instance $Ca_3Al_2O_6$, $Ca_2Fe_2O_5$, $Ca_4Al_2Fe_2O_{10}$ can be dissolved at high temperatures, for instance 1330–1560° C., in the solid state in the tricalciumsilicate which is present, or that they can in any case form highly refractory mixed crystals with the tricalciumsilicate. Secondly, the raw materials have to be mixed so intimately that during firing the desired refractory mixed crystals can be formed relatively rapidly. Thirdly, the raw materials must be subjected to a process of sintering (vitrification) at elevated temperatures, that is to say, formation of a clinker, or a dense mass which contains a predominating amount of the desired mixed crystals, which process leads to the formation of the refractory mixed crystals. Fourthly, one can manufacture shaped bodies, starting from these refractory products, such shaped bodies being for instance bricks of special shapes which equally have the favourable properties of the sintered product, especially the high refractoriness at elevated temperatures and the stability against water or moisture.

The first step consists in regulating the amounts of SiO_2, Al_2O_3, Fe_2O_3, Cr_2O_3 in proportion to the amount of CaO, in such a manner that the desired formation of mixed crystals between the tricalciumsilicate and the compounds of trivalent metals can take place without the formation of objectionable amounts of easily fusible crystals, such as $Ca_4Al_2Fe_2O_{10}$, Ca_2FeO_5, $Ca_3Al_2O_6$. On the other hand a certain minimum amount of Al_2O_3, Fe_2O_3, Cr_2O_3 ought to be present in order to make possible the manufacture of the building material, chiefly as fluxing agents and possibly also for stabilizing the tricalciumsilicate, Ca_3SiO_5, by the formation of mixed crystals.

It has been found that the necessary conditions for the manufacture of a highly refractory product can be expressed by giving the amounts

of SiO_2, Al_2O_3, Fe_2O_3, Cr_2O_3 in proportion to the percentage of CaO of the building material. Hitherto one has often tried to fix the most favourable amounts of the substances added in proportion to the total weight of crude dolomite or limestone used; however, only the proportion to the percentage of CaO is of importance.

Calculating the amounts of trivalent metals, it has to be noted that the effect of one unit of weight Al_2O_3 corresponds to about double the weight of Fe_2O_3 and Cr_2O_3, according to numerous practical trials.

For each 100 parts by weight of CaO the quantity by weight of

$$Al_2O_3+\frac{Fe_2O_3+Cr_2O_3}{2}$$

shall not be less than about 6 and not more than about 15, preferably it shall be about 7–12%. If the trivalent metals substantially consist of chromium and iron, the higher amounts, for instance 15–17 parts by weight for each 100 parts by weight of CaO may be used. The amount by weight of SiO_2, calculated in proportion to 100 parts by weight of CaO ought not to be lower than about 20 parts and ought not to be in excess of about 33 parts, preferably it should be about 22–29 parts of SiO_2.

Calculating these amounts, one has to take into consideration not only the percentage of SiO_2, Al_2O_3, Fe_2O_3, Cr_2O_3 in the materials added, such as quartz, talc, kaolinite, clay, iron ores and chrome iron ore, but also the percentage of SiO_2 and of trivalent metals in the raw materials used, such as dolomite and limestone.

Manufacturing according to the present invention, the raw material containing the calcium, for instance the limestone or the dolomite, is very finely crushed, preferably together with the added materials, until a grain size of 0.12 mm or less is obtained, preferably by wet milling. It is very advantageous to add a dispersing agent during the wet milling. One can use inorganic or organic dispersing agents. Very advantageously one can use for that purpose soluble compounds of sodium, especially those which have an alkaline reaction, such as for instance soda, sodium silicates, such as sodium metasilicate, borax; also certain compounds without alkaline reaction can be used, such as sodium phosphate, sodium pyrophosphate, sodium oxalate. Likewise one can use humates and tannates of sodium or ammonium. By using compounds of sodium in amounts corresponding to from 0.1 to 1.5 parts by weight of Na_2O, preferably about 0.5 parts by weight, for 100 parts by weight of CaO, one obtains at the same time the important advantage that the compounds of sodium are very useful as fluxing agents with regard to the sintering (vitrification) of the building material.

For substances of addition which contain silicon, aluminium, iron, chromium, one can for instance use quartz, bauxite, kaolinite, clay, chrome iron ore, or mixture of such substances.

The crushed product, if necessary is dried, eventually moulded into lumps, and then preferably in a neutral or oxidising atmosphere is subjected to a process of sintering (vitrification), at a temperature sufficiently high to calcine the dolomite and the limestone and to obtain the desired formation of refractory mixed crystals; the temperature of vitrification is preferably very much higher than the melting temperature of the aluminates, ferrites, alumoferrites and chromites of calcium which enter into their constitution. In the utilization of ferrites the sintering temperatures ought to be in excess of 1425° C. which is the melting point of $Ca_2Fe_2O_5$, preferably they ought to be above 1500° C.; in utilizing aluminates they ought to be in excess of 1536° C., which is the temperature of partial melting of $Ca_3Al_2O_6$, preferably they ought to surpass even 1600° C. A very important phenomenon which can be observed in the process of sintering, according to the invention, is the following:

The mixture of substances at a temperature between for instance 1500° C. and 1600° C. shows first a very distinct softening, which apparently is due to the fact that at these temperatures part of the mixture is being melted, especially the ferrites and aluminates of calcium; by means of the action of that fused liquid the refractory mixed crystals are then formed which mixed crystals contain jointly in the same crystals calcium, silicon and the oxides of trivalent metals in a form which is refractory against fusion. These refractory mixed crystals are the most important constituent of the building material according to the invention. If one uses dolomite or other raw materials rich in magnesium, such as mixtures of dolomite and magnesite as the most important constituent of the raw material, then the sintered building material contains considerable amounts of magnesium. In the sintered product the magnesium is present chiefly in the form of uncombined MgO (periclase); in small amounts, however, it can be present in other compounds; for instance it is even possible that it is found also in the refractory mixed crystals which consist predominatingly of calcium silicate and in subordinate amounts of aluminate or ferrite of calcium.

The sintering of the material can be effected periodically in kilns, such as chamber furnaces or ring furnaces, or it can be very well effected in continuously operating furnaces, such as rotating kilns, analogous to the kilns used for the manufacture of cement. At a firing temperature of 1600° C., an exposure to burning of for instance 6 hours is quite sufficient for the process of sintering.

During cooling of the sintered product a partial separation of the components of the mixed crystals can take place; but during the utilization of the products at high temperatures the mixed crystals are regenerated.

The refractory sintered products according to the present invention can be worked up according to methods known in the industry of refractories, for obtaining moulded bodies, for instance bricks, bricks for arched roofs and the like; however, in many cases one uses directly the sintered product for obtaining a dense mass, for furnaces bottoms and the like.

In the manufacture of shaped products one proceeds advantageously as follows. The sintered product, having a yellowish-brown colour, if aluminates are being used, and a predominating green colour, if ferrites or alumoferrites are being used, and which has the constitution of a dense clinker, is crushed, for instance by means of crushing devices, to produce as much as possible of sharply edged grains. The crushed material, for instance with a maximum grain size of 4 mm. is worked up in such a manner that the finely divided fraction is used as a bonding agent; for instance, a material with grain size less than 0.15 mm. is used in an amount of preferably 15–20% by weight of the building material, but also higher percentages of finely divided materials can be

utilized. From the batches, if desired moistened with water or with aqueous solutions, one can produce shaped bodies, for instance by means of an hydraulic press, such moulded bodies being afterwards dried and subjected to a process of firing preferably in a neutral or oxidising atmosphere, and preferably at temperatures above 1400° C., for instance at 1500–1550° C. At these temperatures the finely divided mass is densified, which improves the stability of the shaped material against moisture, and at the same time the mixed crystals are better homogenized which improves the refractoriness.

Using the chemical composition given in the present invention and by means of the process of sintering described above, it is even possible to heat the moulded shapes to a temperature in excess of the melting temperatures of the compounds of calcium and the oxides of trivalent metals, without partial fusion and without softening of the moulded bodies taking place.

The moulded bodies manufactured according to the invention are extremely refractory and under a load of 2 kg/cm² at a temperature of 1700° C they are subject to a deformation amounting to only 1–3% or less. They are extremely stable against the action of moisture or water and can be kept immersed in water for months, without being hydrated in an objectionable manner; they even resist a treatment of 2 hours in autoclaves with superheated water at 170° C.

Examples

(1) As raw material, a dolomite of the following composition was used: 30.65% by weight of CaO, 20.23% MgO, 1.10% Al_2O_3, 1.46% FeO_3, 0.58% SiO_2, 45.98% CO_2. To 100 parts by weight of the dolomite were added 6.50 parts by weight of quartz (with 99.9% SiO_2) and 1.00 part by weight of Fe_2O_3 and 1.80 parts by weight of Na_2CO_3. 30 parts by weight of water were added and the material crushed in a ball mill until a degree of sub-division below 0.12 mm (2500 openings per cm², or 120 mesh English), dried by evaporation of the water and sintered at a temperature of 1520° C. for 6 hours in an oxidizing atmosphere. The sintered products were crushed to a grain size of 4 mm. The fine dust, with a particle size of less than 0.15 mm was separated by means of a sieve, and was used as an amount of 20 percent by weight of fines, together with 80 percent by weight of coarse granular material (0.15–4.0 mm). As a liquid for the batch a solution of 15% of syrup in water was used. To 20 parts of fine material there were added 2 parts of liquid, while to 80 parts of coarse granular material there were added 3 parts of liquid; the fines and the coarse grains were mixed and then moulded in a hydraulic press under a pressure of 200 kg/cm², after which they were dried and subjected to firing at cone 18 for 24 hours. The shaped bodies which were manufactured in such a manner had a refractoriness under a load of 2.8 kg/cm² at 1590° C, and at 1750° C under the same load a linear compression of only 2%. The products were extremely stable against water. In this example the ratio by weight of SiO_2:CaO is 23:100 and

$$Al_2O_3+\frac{Fe_2O_3}{2}:CaO=7.5:100$$

(2) As raw material a dolomite of the following composition was used: 28.80% CaO, 22.70% MgO, 0.10% SiO_2, 0.40% Al_2O_3, 0.40% Fe_2O_3, 47.70% CO_2.

To 100 parts by weight of the dolomite were added the following substances: 14 parts by weight of a refractory clay of the following composition: 59.60% SiO_2, 29.30% Al_2O_3, 1.40% Fe_2O_3, 0.10% CaO, 0.10% MgO, 1.40% Na_2O+K_2O, 8.10% H_2O, as well as 1 part by weight of Na_2CO_3. The mixture was milled with the addition of 20 percent by weight of water to 100 parts by weight of dry substance until all passed through a sieve with 4900 openings per cm² (180 mesh English), corresponding to a maximum particle size of 0.088 mm. The substance was sintered at 1620° C for 6 hours, cooled down, crushed to a maximum grain size of 4 mm, and then worked up to obtain moulded bodies as in example 1. The shaped bodies had a refractoriness under a charge of 2 kg/cm² as follows: begin of softening at 1560° C; breakdown under the same load takes place at 1690° C. The stability of the material against water was excellent. One could use the sintered material in the crushed state or in unbroken state for lining of furnaces for melting iron and steel without previous manufacturing of shaped bodies.

In this example the ratio by weight of SiO_2:CaO is 21:100 and

$$Al_2O_3+\frac{Fe_2O_3}{2}:CaO=12.5:100$$

Such dolomite refractories as described in example 2, relatively rich in Al_2O_3, are especially well suited for such uses as for linings of soda ovens, even if these refractories are somewhat less resistive against load under extremely high temperatures than those which contain less amounts of Al_2O_3. They are very resistive against alkaline fluxes.

(3) The same dolomite as in example 1 was used. To 100 parts by weight of the dolomite were added 6 parts by weight of quartz and 4 parts by weight of chrome iron ore of the following composition: 51% Cr_2O_3, 16% FeO, 12% Al_2O_3, 16% MgO and 5% SiO_2. To the mixture was further added 1 part of Na_2CO_3, and the material was worked up as in example 1. Again a highly refractory product, entirely stable against water is obtained. In this example the ratio by weight of SiO_2:CaO is 22.1:100 and

$$Al_2O_3+\frac{Fe_2O_3+Cr_2O_3}{2}:CaO$$

is 13.7:100.

(4) A limestone containing 55.50% CaO, 1.00% SiO_2, 43.50% CO_2 and 0.10% Al_2O_3 was worked up. To 100 parts of limestone were added 11.50 parts by weight of quartz, as well as 5 parts by weight of Fe_2O_3 and 5 parts by weight of a clay containing 60% SiO_2, 30% Al_2O_3 and 10% H_2O; further to 126.5 parts by weight of the mixture were added 2 parts by weight of crystallized borax as well as 25 parts by weight of water. The material was finely milled, dried by means of evaporation, and then sintered at 1650° C for 4 hours. A refractory product was obtained which could be used as well for ramming masses as for the manufacture of moulded bodies. In this example the ratio by weight of SiO_2:CaO is 27.9:100 and

$$Al_2O_3+\frac{Fe_2O_3}{2}:CaO=7.40:100$$

The examples given demonstrate that by following the conditions described one obtains products the properties of which are highly superior to those of water resisting dolomites known hith-

erto. For instance concerning the refractoriness under a load of 2 kg/cm^2, one has hitherto for water resisting dolomites usually quoted a temperature of beginning of softening (ta) 1500° C, while for the temperature of breakdown under load (te) one has quoted 1600° C; that demonstrates that an important technical progress is made, if one follows the instructions according to the present invention.

The refractoriness under load of the new products is also very much better than that of those magnesites which have generally been used hitherto, and for which the beginning of softening under a load of 2 kg/cm^2 is found at about 1500° C.

In the same manner, according to the method described, one can obtain highly refractory products, characterized by mixed crystals of tricalciumsilicate on the one hand and aluminates, ferrites etc. of calcium on the other hand starting from mixtures of dolomite, limestone, magnesite with additional substances consisting of silicates or oxides; one can also utilize such natural raw materials the composition of which leads directly to the formation of the desired mixed crystals, for instance dolomite or limestone which themselves contain corresponding amounts of SiO_2, Al_2O_3, iron compounds. In working up such raw materials, eventually after homogenizing by means of fine crushing of the raw material, one can again effect a sintering at such elevated temperatures that softening takes place and the desired mixed crystals are formed, which later on can be worked up, such as described in the foregoing.

KRISTOFFER JOHANNES STENVIK.

Published May 11, 1943

Serial No. 342,325

ALIEN PROPERTY CUSTODIAN

AERO-ENGINE SPARKING PLUG WITH A SOLID INSULATOR

Slobodan M. Dobrosavljevitch, Belgrade, Jugoslavia; vested in the Alien Property Custodian

Application filed June 25, 1940

This patent deals with improvements applied to the unscreened and screened aero-engine sparking plug.

By these improvements incorporated, small variations of the central electrode temperature are obtained within relatively wide limits of the thermic loads of the engine increasing at the same time considerably reliability from the electrical, thermic, and mechanical point of view.

Consequently, this new design of the sparking plug diminishes the possibility of fouling and overheating, giving at the same time a sparking plug more universal and more reliable in service and with a lower production cost.

In the existing aviation plugs, it is the central electrode in which the main electrical insulator is fixedly incorporated, and thus insulated electrode is fitted into the body of the sparking plug in a detachable way. This type of design requires a relatively long central electrode, conditioned further with the necessary length of the insulation both of the in- and outside of the plug in order to make impossible the electrical losses. On the other hand, this conception allows only a relatively small diameter of the central electrode which is also limited by the standard thread for fitting the plug into the cylinder. Finally such a design does not allow a shape of the central electrode with a favourable thermal gradient.

In fact, in the known types of the plugs, a certain increase in the thermal capacity as well as acceleration of the heat-exchange was obtained by incorporating a highly conductive metal, such as copper, around and in the hollow of a long and thin electrode. The effect of such an arrangement was forcibly small not only owing to this insufficient capacitive mass but also owing to the absence of alignment of same in the proximity of the spot where the exchange of the heat takes place.

With this new design a compact main insulator is incorporated in the body of the sparking plug. The hollow in this insulating bush provides in its centre a tapered seat for the central electrode. The electrode itself is relatively short and has a voluminous and tapered head by which the electrode is fitted in a detachable way over a copper joint into the tapered seat of the insulator. The electrode is secured in the seat by a special nut screwed on the upper part of the plug body by means of an intermediate insulating distance piece into which the electric cable is inserted. At the same time to the free part of the central electrode a convenient shape, from the point of view of the heat exchange, can be given.

Further by this new conception, the central electrode by its design offers a possibility not only to incorporate conveniently a metal of a great conductibility, as copper, into the electrode in order to improve the heat conductivity, but also to concentrate this mass in the head, viz. near the end in order to obtain caloric capacity.

By this arrangement a thermic accumulator with efficient heat exchange is created, thus damping temperature variations of the electrode end.

With regard to reliability and endurance this new design offers following advantages:

With the existing plugs the conditions of gas-tightness and reliability are bad due to great difference in dilatation between the central electrode and electric insulator incorporated into said electrode.

With the new design this disadvantage is eliminated, because the dilatation of the central electrode has practically no effect whatsoever on the insulator.

In the existing plugs the internal insulation towards the combustion chamber is highly loaded particularly from the thermical viewpoint, because the insulation is fitted on the central electrode, and in the new plug this insulation is situated more favourably being fitted in the body of plug itself which has a relatively low temperature.

With regard to the insulation, the present design allows the use of a solid insulator such as oxide of aluminium or steatit.

The reasons, such as cracking of the insulator, bad gas-tightness, etc., for which these insulators could not be used with the existing types of plugs for the engines of a high output, are eliminated in the new design.

In short, the present solution of the sparking plug, with all its outlined qualities and especially the possibility of better cooling and better conditions of the heat exchange of the central electrode gives in comparison to the existing plugs considerable advantages, especially for highly rated aero-engines.

The diagram showing a longitudinal section is attached in order to give the idea of the two alternative realisations of the design of the new plug.

In the body of the plug (1), the solid insulator (2) is incorporated. The tapered head of the central electrode (3) is fitted over a copper joint (4) into the tapered seat of the insulator.

In the electrode itself is placed a conductive and capacitive mass (5), viz. copper. This electrode is secured in its seat by the insulating distance piece (6), washer (7) and the securing nut (8). The electric cable, the wires of which are in electric contact with the washer (7), is inserted inside the distance piece. The metal elbow of the screen is fixed to the threaded end of the securing nut.

Summary of the covering patent

This aero-engine sparking plug is characterized by a solid insulator fitted into the body of the plug bearing the central electrode with its voluminous and tapered head in a detachable way. This electrode secured on the tapered seat of the insulator by a securing nut and insulating distance piece, is filled with a highly thermically conductive metal which serves as an accumulator heat damper not only in its free end but as well in its head.

SLOBODAN M. DOBROSAVLJEVITCH.

PUBLISHED

MAY 11, 1943.

BY A. P. C.

S. M. DOBROSAVLJEVITCH
AERO-ENGINE SPARKING PLUG WITH
A SOLID INSULATOR
Filed June 25, 1940

Serial No.
342,325

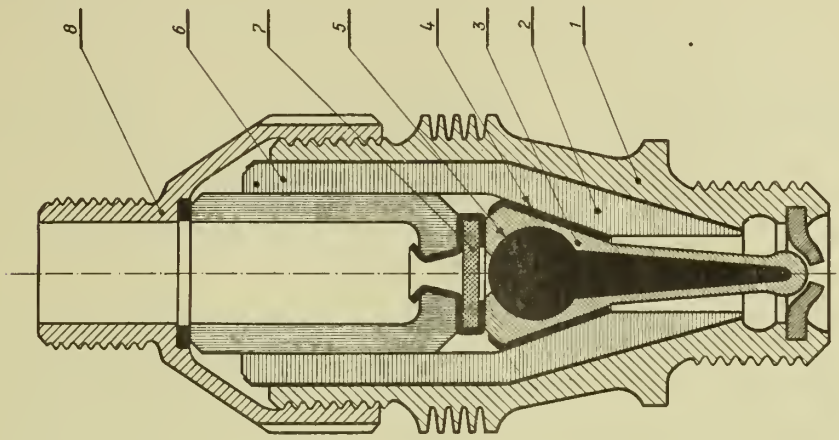

FIG. II.

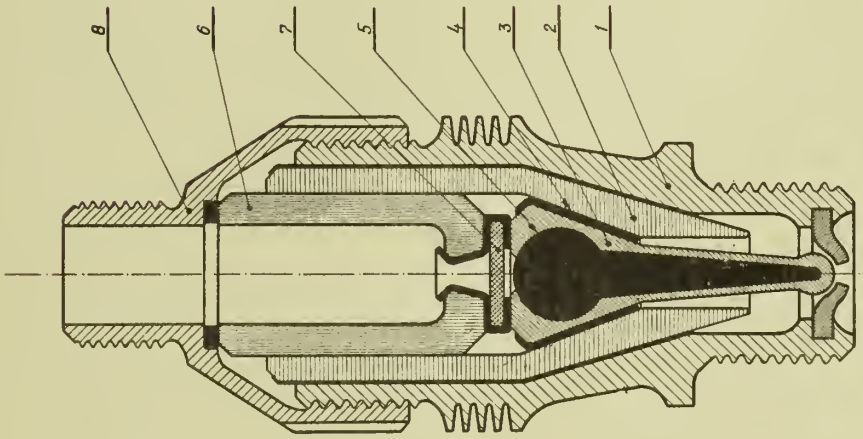

FIG. I.

Slobodan M. Dobrosavljevitch
INVENTOR
By [illegible]
his ATT'Y.

Published May 11, 1943

Serial No. 344,512

ALIEN PROPERTY CUSTODIAN

DRIVING DEVICE FOR ROTARY PISTON MACHINES

Paul Sobek, Vienna I, Germany; vested in the Alien Property Custodian

Application filed July 9, 1940

The devices designed to drive the pistons of rotary machines rotating at different angular velocity e. g. the links supported eccentrically with respect to the axis of revolution of the piston often suffer from the disadvantage of the relation between driving member and piston being such that the forces (tangential forces) manifesting themselves and having to be overcome at the beginning of the operation under load grow to an intensity hindering the start of the machine extremely difficult. Besides, in that case, operation goes on under a distribution of forces not admitting of a correct equilibrium of same which exercises as unfavourable influence on the coefficient of efficiency.

The object of the present invention is a drive for the pistons of rotary machines, rotating at different angular velocities, characterized in that the middle of the line connecting the piston drive fulcra is placed at such a distance from the common center of rotation of the pistons that the piston axis form with that line an angle of not more than 60°, provided that the angles which they form with the connecting line of the piston drive fulcra be equal to each other. It is recommendable to arrange the piston drive fulcra in a disc covering an annular space of cylindrical shape, the said disc acting as driving device for the piston. However, the piston drive fulcra may also be slidably adjusted in a member displaceable in a straight line passing through the piston fulcrum. This member may, in a wellknown manner, be formed into a link supported on a slide. This design permits of the above mentioned angle being accurately adjusted according to requirements. But it is also possible to determine the angle by the length of blocks displaceable in the link and carrying the piston drive fulcra when the length of these blocks should not surpass the cosine of the angle multiplied by the distance of the piston drive fulcra from the common piston fulcrum.

The drawing shows two embodiments of the invention by way of example. Fig. 1 is a schematic diagram of the drive, Fig. 2 a section along the line I—I of Figure 3 through a driving device fitted with a link disc covering the cylindrical space, Fig. 3 is a section through the device along the line II—II of Fig. 2, whilst Fig. 4 is a longitudinal section through the axis of a device as per the invention provided with displaceable link axis and with a piston axis angle adjustable with regard to the link. Fig. 5 is a section along the line III—III of Fig. 1; the Figures 6 and 7 are sections along the line IV—IV of Fig. 1 at various operating positions of the pistons. Fig. 7 shows the arrangement, in which the piston drive fulcra are in the position determining the adjustable angle. The Figures 8 and 9 are sections along the lines V—V and VI—VI of Fig. 1. In Fig. 1 p is meant to signify the piston drive fulcra, o the connecting line of the piston drive fulcra, n the middle of the connecting line and at the same time the fulcrum of the driving member, r the distance of the piston drive fulcra from the piston fulcrum and at the same time the piston axis, α the angle formed by the connecting line of the piston fulcra and the piston axis, L the length of the link block in case of link drives.

If the piston axes r are adjusted in such a manner that the angle α formed by same and the connecting line o of the piston drive fulcra p is inferior to 60°, the forces and accelerations manifesting themselves at the beginning of the work under load are bound to remain within a certain limit warranting a shock free operation of the rotary machine and a gradual transition in case of the change of velocity. On the other hand, the working or delivery space of these machines should be as large as possible for increasing their output. This aim can only be attained by having the angle α exceed the above mentioned limit. Consequently, it was hitherto impossible to warrant a shockfree operation. Hence, this type of machine was never yet of much practical use nor of adequate working capacity. In view of the fact that the pistons are rotating and not reciprocating, the shocks and the sudden increase of load were quite inexplicable. It was ascertained, however, that the above said disadvantages would suddenly disappear, when the output of the machine e. g. the pump was reduced which was easily obtained by adjusting the angle. Thus it was found that the intensity of the shocks was influenced by the angle α which the piston axes r form with the connecting line o of the piston fulcra p. Experiments and tests have shown that the largest working space compatible with shockfree operation corresponds to an angle of 60°.

In the embodiment according to the Figs. 2 and 3 the cylindrical or working space **1** is formed by the casing **7**, the bottom of the casing **3** and the link disc **13** which is used for covering the space. The bottom **3** is provided with a cylindrical recess **4** extending as far as the link disc **13** and thereby forming the working space into an annular chamber. At the same time, by this design, an axle is formed, round which the pis-

tons 2 and 2*a* are allowed to rotate. Fig. 3 shows the position of the pistons at which the angle α is obtained between the piston axis *r* and the connecting line *o* of the piston drive fulcra *p*. The link disc is provided with the groove 12 in which the blocks 14, 14*a*, supported by the pins 11, 11*a* are arranged. It is advantageous to fix the length of the link blocks in such a manner that they are in contact when the predetermined angle is formed by the axes. The casing containing the link disc 13 is closed by means of a cover 3*a* in which the driving shaft 15 is supported at a distance *a* from the axle 4 formed by the above mentioned casing recess. Furthermore, the casing carries the in- and outlet branches 24 and 25. The mode of operation is the same as with all rotary piston machines i. e. the pistons rotating round their common axes alternately retire from each other and approach each other, this sucking and discharging in turn, the maximum output being obtained by shockfree operation as the axes 4 and 15 are placed at the maximum distance admissible in regard to the angle α which should not exceed 60°.

The Figures 4–9 show a rotary piston pump whose axis 4 and 15 permit of an adjustment of their distance *a*. The pistons 2, 2*a* are located in the working cylinder 1 provided with the usual pump in- and outlet branches 24, 25. The one of these pistons 2*a* is fastened on a solid shaft 4 extending to the bottom 3 of the working cylinder, whilst the other piston 2 is fixed by screws on a hollow shaft 5 slid on the solid shaft mentioned. The hollow shaft is supported by the bearing 8 connecting the piston drive casing 7 and the cylinder 1. At the end opposite to the cylindrical space or chamber each of the two shafts carries an arm fastened to it by means of a key 9, viz. the solid shaft the arm 10*a* and the hollow shaft the arm 10. These arms are employed as cranks for driving the respective pistons. For this purpose they are fitted with pins 11*a* and 11 on which the blocks 14*a*, 14 are allowed to rotate. These blocks are, at the same time, slidably arranged in the groove 12 of a link disc 13 and are preferably of such a size that their length L be equal to the double of the cosine of 60° multiplied by the distance *r* (Fig. 1) of the piston axis fulcrum *p* from the common piston fulcrum *m*.

Theb locks by touching each other, determine the adjustment of the link and, in consequence, also that of the piston axes with a view of obtaining the greatest angle admissible. The link disc 13 is carried by the shaft 15, the latter being supported by an adjustable bearing 16. This bearing rests on a spring 17 and is guided in same by the columns 23 and by the pin 18 formed downwards into a stop. It is acted upon by a screw 21 adjustable in the casing 7, on which an adjustable stop 22 is provided, the stop serving for limiting the progress of the screw as well as the adjustability of the bearing and that of the angle formed by the piston axes. However, this limitation may also be obtained by other means. In any case a limiting device or stop should be provided. The shaft 15 is connected with the driving shaft proper 27 by a slip coupling 28, 28*a*, which permits of an adjustment of the shaft 15 perpendicularly to the groove 12 of the link by means of a cross 19 consisting of two beams 19*a*, 19*b*, the cross beams being made slidable in the grooves 20, 20*a* of the coupling parts 18, 18*a*.

The mode of operation of the device is the following. The machine is driven from the shaft 27. Through the coupling 28, 28*a* the movement is transmitted to the shaft 15 adjustable by means of the bearing 16, the shaft 15 rotating the link disc 13 which is fastened to it. Thereby the blocks 14, 14*a* arranged in the groove 12 of this disc and carried by the pins 11, 11*a* of the arms or cranks 10, 10*a* are forced to execute rotary and reciprocating motions. The arms 11, 11*a* will transmit these motions to the respective shafts 4 and 5 which, in their turn, are made to actuate the pistons 2, 2*a*. The distance of the axes of the shafts 4, 5 on one hand and 15 on the other is the factor which, in combination with the arms whose axes correspond to the axes of the pistons, determines the maximum angle α forming between the latter. As stated above this angle should in no case exceed 60°, provided that the axes are symmetrically adjusted with respect to the connecting line o. By means of the screw 21 and the spring 17 cooperating with same the bearing 16 and, hence, also the shaft 15 may be adjusted until the collar 22 touches the casing wall or until the blocks are made to contact, provided they have the length mentioned above. In consequence of the adjustment of the shaft 15 the cross 19 will slide in the coupling parts 28, 28*a*, thus warranting an exact transmission of the rotation from the shaft 17 on to the shaft 15.

The output of the machine depends on the distance *a* of the shaft axis 4, 5 from the shaft axis 15 i. e. on the value of the angle α considering the increase or reduction of the operating or working space 1 enclosed between the pistons and the cylinder.

PAUL SOBEK.

PUBLISHED

MAY 11, 1943.

BY A. P. C.

P. SOBEK

DRIVING DEVICE FOR ROTARY PISTON MACHINES

Filed July 9, 1940

Serial No. 344,512

2 Sheets-Sheet 1

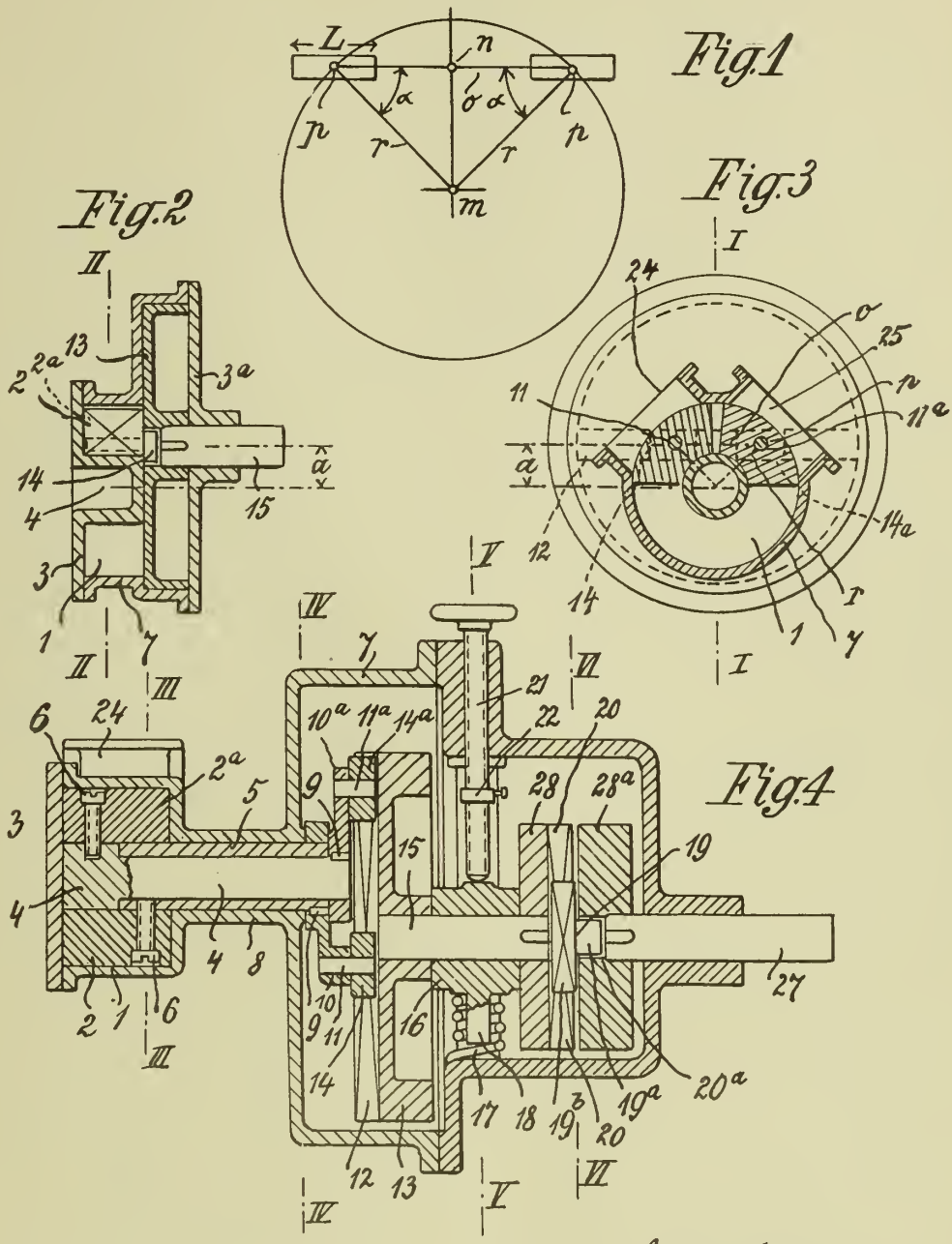

Inventor
Paul Sobek
per
Dean Fairbank & Hoisch
Attys

PUBLISHED MAY 11, 1943. BY A. P. C.

P. SOBEK

DRIVING DEVICE FOR ROTARY PISTON MACHINES

Filed July 9, 1940

Serial No. 344,512

2 Sheets-Sheet 2

Fig. 5

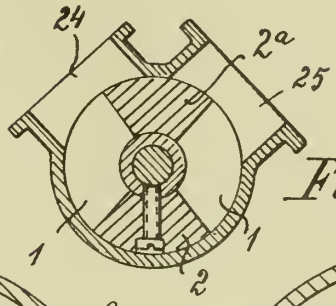

Fig. 6

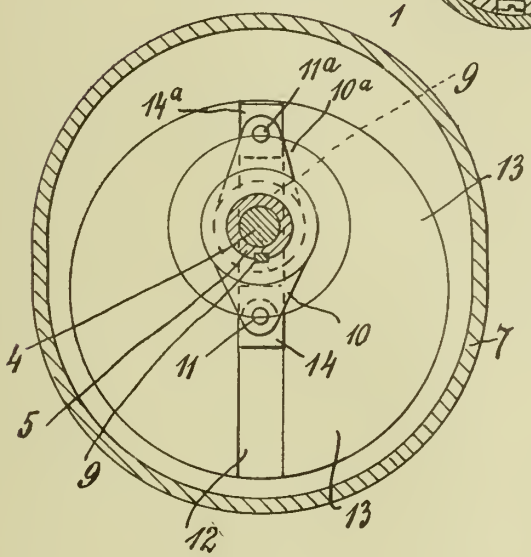

Fig. 7

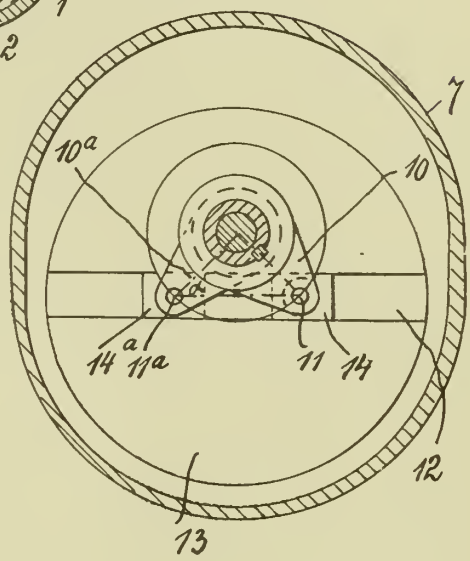

Fig. 8

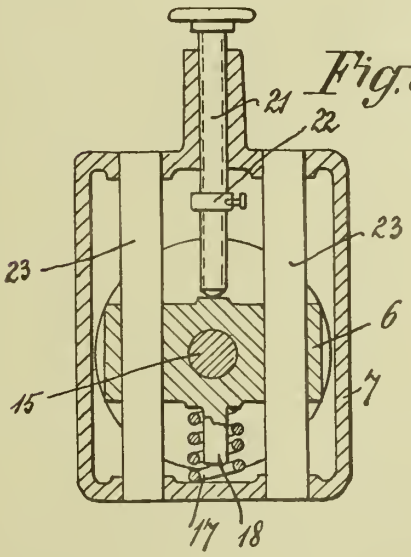

Fig. 9

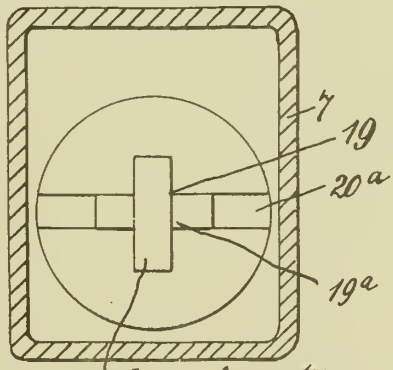

Inventor
Paul Sobek
by Dean Frankel & Hirsch his Atty

Published May 11, 1943

Serial No. 345,372

ALIEN PROPERTY CUSTODIAN

ENAMELS

Werner Heimsoeth, Leverkusen-Wiesdorf, and Robert Weinig, Koln - Mulheim, Germany; vested in the Alien Property Custodian

No Drawing. Application filed July 13, 1940

The present invention relates to new enamels, and more particularly it relates to new enamels in which at least a part of the usually present boron compounds is replaced by a titanium compound forming a clear melt with the other usual constituents of the enamel.

Up to now titanium dioxide has been used in some cases in the enamel industry, to increase the resistance of the enamels to acids. Often also trials have been made to turbid enamels by means of titanium dioxide or other titanium compounds. For the melting of the titanium in enamels has been further proposed, to use a sodium titanium silicate instead of titanium dioxide, to facilitate the dissolution of the titanium in the molten enamel and to avoid, certain difficulties which appear during the melting of the titanium dioxide. The trials hitherto made for the use of titanium compounds for manufacturing of enamels were directed on the one hand to the fact, to add titanium oxide or other titanium compounds as opacifiers on the mill, to keep them in the enamel flux substantially as cristalline substance. On the other hand, one tried to influence the properties of the enamels in a certain direction in general for increasing the acid resistance, by the admixture of titanious materials to the common enamel raw batch whereby these materials are molten in the enamel.

In accordance with the present invention it has been found, that in enamel batches the boron compounds which are up to now looked upon as essential constituents by the enamels, can be substituted partially or in the whole by such titanium compounds, which form with the other glass-forming constituents of the enamel batch a clear melt. There have been produced sometimes enamels which are free of boron or contain only few boron whereby the missing boron portion was substituted substantially by metal compounds. Such enamels differ in their properties so far from the normal borax silicate enamels, that they only can be looked upon as bad substitutes. In accordance with the present invention it is, however, possible to manufacture enamels poor in boron or free of boron, which in the fact are not inferior in quality than boron containing enamels.

As the titanium is intended to work as a fluxing material such compounds come preferably into question which are easily dissolved in the enamel raw batch during melting, respectively form clear melts with the glass-forming materials. Such compounds are e. g. alkali metal titanium silicates, titanium fluoro compounds and titanates. Preferably sodium titanium silicate corresponding to the formula

$$Na_2O.TiO_2.SiO_2$$

is used. When using this compound it is not necessary to use a compound having the stoichiometric composition, it is, however, preferable to employ compounds of the following composition:

	Per cent
Alkali	20–35
TiO_2	5–45
SiO	20–60

The fusion point of such alkali metal titanium silicates can be lowered by the introduction of certain quantities of alkaline earth metal compounds or of the elements of the 3rd group of the periodic system, suitable in connection with fluorine. As titanates and titanium fluoro compounds come preferably compounds of the alkali metals into consideration, e. g. Na_2TiO_3 and Na_2TiF_6. But also titanates or titanium fluoro compounds of the alkaline earth metals as well as of coloring elements come into question.

The titanium compounds mentioned serve to a partial or complete substitution of the boron compounds. It is e. g. possible to substitute 50–70%, even also 100% of the borax portion in the enamel mixture by the titanium compounds mentioned without a further alteration of the mixture being necessary. Hereby in general instead of one part of borax about 0.5–0.8 parts of alkali metal titanium silicate has to be introduced. By this substitution the gloss and the chemical resistance of the enamels is considerably increased.

EXAMPE 1.—*White frit*

	Normal composition	Boron substitution
Borax	25.0	8.0
Feldspar	22.4	22.4
Quartz	26.0	26.0
Cryolith synth	12.4	12.4
Soda ash	6.1	6.1
Sodium nitrate	3.0	3.0
Calcium carbonate	5.1	5.1
Sodium titanium silicate		10.0
	100.0	94.0

In a similar manner also the alkali metal titanates and alkali metal fluorides suit for the substitution of the borax without further alteration.

EXAMPLE 2.—*Ground coat*

	Normal composition	Boron substitution
Quartz	12.0	12.0
Feldspar	37.5	37.5
Borax	38.0	20.0
Soda ash	6.0	0.8
Sodium nitrate	2.0	2.0
Fluor spar	3.3	3.3
Nickel oxide	0.6	0.6
Cobalt oxide	0.2	0.2
Pyrolusite	0.4	0.4
Na_2TiF_6		10.0
	100.0	94.0

The melting of the enamels according to these compositions as well as the further working up is effected in the usual way.

An enamel completely free of boron will be obtained in accordance with the following example:

EXAMPLE 3.—*Black frit free of boron*

Quartz	40.3
Feldspar	11.4
Soda ash	13.7
Sodium nitrate	3.4
Barium carbonate	3.4
Fluor-spar	3.4
Pyrolusite	1.7
Cobalt oxide	1.1
Strontium fluoride	3.4
Zinc oxide	5.7
Black pigment (product usual in commerce consisting of strongly calcined oxides of Co, Mn, Fe, Cr)	3.4
Sodium titanium silicate	9.1
	100.0

Also such mixtures free of boron are worked up in the usual manner and present enamels which are distinguished by a special nice colorotion, high gloss and considerable resistivity to acids.

WERNER HEIMSOETH.
ROBERT WEINIG.

Published May 11, 1943

Serial No. 345,670

ALIEN PROPERTY CUSTODIAN

APPLIANCES FOR MECHANICAL COSMETIC TREATMENT

Herbert Gottlieb, Brno, Czechoslovakia; vested in the Alien Property Custodian

Application filed July 15, 1940

This application is a division of applicant's copending application Serial No. 209,612, filed May 23, 1938.

For the mechanical removal of wrinkles and other defects of the skin, particularly on the face, elastically yieldable sheets, generally of rubber, are used, and such sheets are applied on the surface of the desired part of the human body and tensioned thereupon by means of strips or the like attached to the sheets. Hitherto such sheets are cut from plane films so that after tensioning they cannot produce a uniform action in all points of the uneven surface of the part of the human body, particularly of the face, the surface of which is very irregular. This disadvantage becomes particularly apparent in commercial use of the same cosmetic appliance, or of the sheet thereof, for different persons whose body organs differ considerably in the amount and distribution of the subcutaneous fat, cellular tissue and the like.

In order to secure a strictly uniform action of a cosmetic appliance of the above kind on the surface of a certain part of the human body, particularly of the face, of different persons throughout the elastically yieldable sheet to be tensioned, the same has in accordance with the present invention already in untensioned condition as exactly as possible the spatial shape of the respective part of the human body so that it fits perfectly in all its points without preliminary tensioning of certain parts thereof and thus the intentionally produced tension is transmitted uniformly on the entire surface of the skin covered by such sheet.

In order to obtain such a sheet which in untensioned condition already has the spatial shape of a part of the human body, for instance of the face, a mould of the face is produced in a manner known per se in gypsum or another hardening material, and a thin layer of a plastic and hardening material which after setting is elastically yieldable, such as latex, rubber solution or the like, is applied thereafter on the surface of the negative mould of the face thus obtained. To facilitate the removal of the hardened spatially moulded sheet from the mould the surface of the latter preferably is impregnated, before application of the sheet material, with an agent which is inert to such material and prevents the same from adhering to the mould. Similarly it is possible prior to the application of the sheet material, for instance prior to the spraying of latex, or during such operation, to apply agents known per se which influence the hardening as well as the characteristics of the sheet material, and in addition also agents which make the material resistant to the action of chemical preparations, such as face creams and the like rubbed in into the skin. In order to provide for respiratory or other required openings in the sheet, when so desired, the surface of the mould may have formed at suitable points projections of convenient height, made additionally for instance from the mould material, and projecting above the layer of the sheet material being applied. To reinforce the edges of the openings so reserved against tearing during the tensioning of the sheet a larger amount of the sheet material preferably is applied around the base contour of the projections and after hardening of the sheet such an additional amount of material forms marginal beads integral therewith. A particular advantage of the invention consists in that the tensioning effect of the sheet may be restricted to a direction at right angles to that of the wrinkles to be removed, and for this purpose, before application of the sheet material, during such application, or after the same, flexible but inextensible stiffening elements, preferably of fibrous nature, for instance in the form of silk or other textile threads, extending substantially in the same direction as the wrinkles to be removed, are placed on the surface of the mould, or are incorporated in the material being applied, or are placed on the exposed internal surface of this material while the latter is still in a soft condition.

The drawings show by way of example and schematically an embodiment of the cosmetic appliance in accordance with this invention and of the method of making the same, in which, Figure 1 is a sectional view of the mold with a human head in diagrammatic outline, Fig. 2 is a sectional view illustrating the molding operation, and Fig. 3 is a side view of the appliance applied to a human head.

The negative mold **2** of the anatomic configuration which is to be treated is first prepared in known manner from gypsum or plaster Paris. After this negative mold **2** has hardened it is placed in a container having projecting edges **1** and likewise the negative projections **4** are placed in such locations corresponding to the anatomic formations such as the nose, mouth, eyes, etc. and in the form of the invention illustrated the projection **4** is adapted to form the mouth opening **8**. In order to readily remove the appliance or mask from the mold the surface thereof is treated with an impregnated material such as for instance vaseline **3** which is coated thereon by

brushing or the like. The non-stretchable threads such as silk thread **5** are placed in the folds or lines which are in the mold. A rubber or latex material is now sprayed on the mold until the entire surface has been covered with a layer **6** but any edges such as around the periphery or around the projection **4** a greater amount of the material is sprayed in order to form a line, edge or bead such as indicated by reference character **7**.

The rubber or latex which is sprayed to form the mask or appliance can be provided with a suitable vulcanizing agent or material, a vulcanizing accelerator, a dye stuff and an agent which will preserve the rubber or latex against any chemical reaction which may result from the contact thereof with any fats or other materials contained in face creams and the like.

It is also possible to place the silk threads **5** in the mold after the spraying has started or such threads can be provided after the spraying has been completed and if desired the threads can be pressed into the layer. After the layer **6** is dry it is taken out of the form of the mold and is provided with securing or fastening bands **9**. These bands are for the purpose of holding and maintaining the mask or appliance on the part or section to be treated whereby the silk threads **5** will prevent the mask or appliance from stretching lengthwise so that the material of the mask is tensioned only in the desired directions which are preferably at right angles to the wrinkles to be treated, that is the silk threads. This will hasten the flattening out of any folds or wrinkles in the skin.

HERBERT GOTTLIEB.

PUBLISHED H. GOTTLIEB Serial No.

MAY 11, 1943. APPLIANCES FOR MECHANICAL COSMETIC TREATMENT 345,670

BY A. P. C. Filed July 15, 1940

Fig. 1.

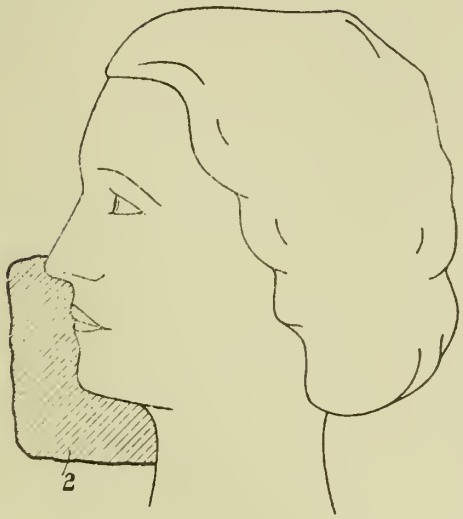

Fig. 2.

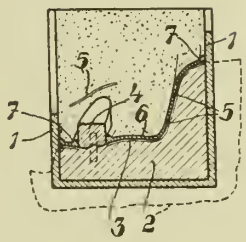

Fig. 3.

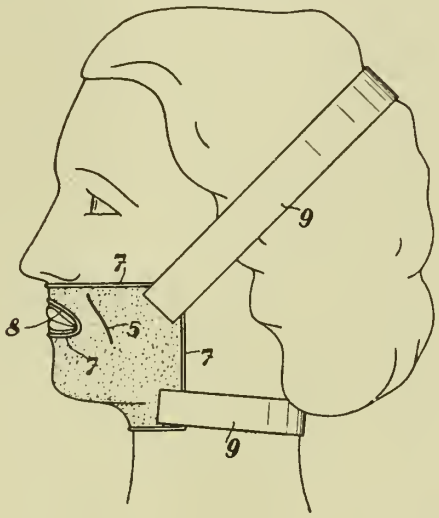

Inventor:
Herbert Gottlieb
By
Young, Emery & Thompson
Attorneys

Published May 11, 1943

Serial No. 345,841

ALIEN PROPERTY CUSTODIAN

DISINFECTANTS

Edmund Weidner, Berlin-Charlottenburg, Germany; vested in the Alien Property Custodian

No Drawing. Application filed July 16, 1940

My invention relates to compositions having the character of disinfectants and plant protectives, and more especially to acid compositions of this kind which contain a thiocyanate.

It is an object of my invention to render acid preparations of a thiocyanate more effective.

It is another object of my invention to provide thiocyanate-containing compositions of high viscosity which will maintain a high viscosity during storage.

A viscous state is oftentimes desirable for substances which are used as disinfectants, as this enables the disinfecting action to be localized to a desired area. Moreover, in this way a more lasting action may be attained.

Now, it is well known to those skilled in the art that thiocyanates act towards reducing the viscosity of many solutions and more particularly those of sols and gels. Thus, for instance, solutions of gelatine are liquefied on addition of a thiocyanate.

It is further known that acid reagents tend to change the viscosity of mucilages of creamy to oily consistency in such a way that the respective solution gradually loses its viscosity.

For these reasons gelatine cannot be employed for imparting to acid thiocyanate-containing solutions a high viscosity. The same applied to protein solutions. If commercial pectin which is often used for producing highly viscous solutions, is added to solutions containing thiocyanates, an increase in viscosity takes place in the first instance. In the course of a few weeks, however, a far-reaching liquefication occurs; preparations containing pectins in addition to thiocyanates are therefore not fit for use either.

While mucilages prepared from linseeds, quince seeds, fleaseed, saleps, cubebes or the like show the same behavior as gelatine, I have found that tragacanth will impart to solutions containing thiocyanates a high viscosity of stable character. The viscosity of solutions, which contain tragacanth in addition to a thiocyanate or thiocyanates and acid compounds, has even been found to increase gradually. The general behavior of solutions of that kind is that at the beginning the tragacanth is in a state of a thin liquid but that the solution becomes more viscous after some time and that the high viscosity will then remain stable.

The viscous acid thiocyanate solution may be prepared in the usual way by well triturating a quantity of pulverized tragacanth with glycerine, the amount of tragacanth to be used depending on the desired degree of viscosity, and by adding the tragacanth-glycerine mixture with constant stirring to a solution containing thiocyanate.

For example, the new product may be manufactured in the following manner:

11 parts tragacanth are mixed with 20 parts boric acid and the mixture triturated with 300 parts glycerine of 1.23 sp. gr. The product when dissolved in 404 parts water yields a viscous mass to which is added so much of a concentrated acid solution of a thiocyanate and water that the total weight amounts to 1000 grams. The acidity of the aqueous solution of a thiocyanate may be adjusted by addition of sodium bisulphate, hydrochloric acid, phosphoric acid or the like, so that the resulting viscous solution has a content of about 1.8% thiocyanogen ion and a pH-value of about 1.7. Other compounds, such as a persulfate, may be added to the highly viscous acid thiocyanate-containing solutions.

The addition of glycerine may be omitted.

The above described solutions are excellently suited for use as disinfectants or plant protectives. Their acid titer remains practically constant.

Various changes may be made in the details disclosed in the foregoing specification without departing from the invention.

EDMUND WEIDNER.

Published May 11, 1943 Serial No. 345,866

ALIEN PROPERTY CUSTODIAN

ELECTROMOTOR-DRIVEN MECHANICAL STOKERS

Jórgen Helge Jacobsen, Hellerup, Denmark; vested in the Alien Property Custodian

Application filed July 16, 1940

It is commonly known, from steam boilers and hot-water boilers in apartment houses, schools, cottages and the like and for industrial boilers, to use mechanical firing devices, the so-called stokers in which the fuel mechanically by means of a feeding device, is moved towards a furnace, and in which the combustion air is supplied under pressure from one or more fans to an air chamber below or around, maybe both below and around, the combustion grate. The consumption of heat in most heating plants is subject to many variations during the course of the day and night, for which reason several daily adjustments of the fuel-feeding member of the mechanical stoker are required. For this purpose generally a mechanical gear operated by hand is used between the driving parts of the stoker and the feeding device. These adjustments, however, cannot in practice accurately follow the large and frequently swinging variations in the amount of heat required. For the stokers used heretofore it may further be said that if the driving member viz. the electromotor fails, the operation may become stopped, and the production of heat may consequently cease. This drawback could heretofore only be remedied by fitting the plant with spare stokers which is an expensive arrangement.

The invention has for its object, by the use of two or more electromotors for driving the firing device, to provide a stoker that is arranged in such a manner that the adjustment of the supply of fuel to the furnace may either be effected manually by means of one or more hand-operated electric contact devices in the circuit for the individual electromotors or entirely automatically, in that the gear-changing is regulated electrically by means of one or more automatic apparatuses which operate either for rising or falling temperatures of the water in the hot-water boiler or for rising and sinking steam pressure in the steam boiler, in such a manner that the stoker, without any inspection, will always operate automatically at a rate suiting the quantity of heat required at the moment concerned. A further object of the invention is to provide a stoker adapted to continue the supply of fuel, even when one of the driving motors of the stoker might fail, and consequently the security of operation will be increased, and the demand for spare stokers in a plant will be smaller.

The invention is illustrated on the drawing in which Fig. 1 shows a construction of a driving plant with two motors for a firing plant, Fig. 2 a wiring plant showing how the change of gear in a driving plant with two motors is operated manually by means of one or more electric contact devices, Fig. 3 a wiring diagram showing how the same driving plant is rendered entirely automatic, as far as the change of gear is concerned, by means of automatically operating electric contact devices, and Fig. 4 a construction of a tilting contact.

Fig. 1 shows how two or more motors coupled singly and independent of one another to the stoker may operate as a driving power for the fuel-feeding device and for the fan or, maybe, for several fans. 1 and 2 are two electric motors, one of which the motor 1 either by way of chain drive, direct coupling, gear wheel drive or, as shown, by way of cord discs and a wedge belt 3 drives a worm shaft 4. The worm shaft 4 drives, by way of a worm wheel 5, one or more sets of gear wheels 6 and 7. The shaft of the gear wheel 7 is either directly or by way of a coupling connected to the feeding device for the fuel. The motor 2 drives either by way of chain drives, direct coupling, a gear-wheel drive or, as shown by way of cord pulleys and wedge belt 8, a shaft 9 in the gearing device and besides, for instance as shown, by way of cord pulleys and belt drives 10 or one or more fans 11. Between the shaft 9 and the worm shaft 4, there is inserted a Bendix pinion or free wheel 12 known per se which acts as an automatic coupling. If the motor 2 drives the stoker, and the motor 1 is not connected to the circuit, the shaft 9 will drive the worm shaft 4 and, thus, the feeding device for the fuel, as the coupling 12, when the motor 2 starts, is flung into engagement with the gear wheel 13 on the gear shaft 4. If now the motor 1 is started, the number of revolutions of the worm shaft is increased, as the gear ratio from motor 1 to the worm shaft is higher than the gear ratio from the motor 2 to the worm shaft, so that the coupling 12 will be flung out of engagement with the gear wheel 13 of the worm shaft 4. Motor 1 alone drives then the feeding device at a higher gear, and motor 2 alone the fan. The quantity of fuel supplied to the furnace is consequently regulated by coupling to the feeding device either one or the other of the motors 1 and 2.

If more than two motors are used, one or more of the same may solely drive the fan, while for instance two other motors are coupled to the shafts 4 and 9, respectively. Each of the last mentioned motors may have two or more numbers of revolution, and thus the stoker may be given two or more speeds.

In Fig. 2 1 and 2 indicate electromotors out of

which the motor 1 may have two or more speeds. 14 is an electric change-over contact device known per se with two or more contacts acting as changing switches for the two or more speeds of the motor 1, 15 is a contact by means of which the supply of current to the motors 1 and 2 can be closed or interrupted, and 16 is an automatic contact device reacting either for rising and sinking water temperatures or for rising and falling steam pressures.

When the current is closed by means of the contact 15, and the automatic contact device 16 has been closed, then the motor 2 will first start, driving at the same time the feeding device at lowest gear as well as the fan. If the current is closed by way of the change-over contact 14 to motor 1, then the latter which drives the feeding device at a higher speed will take care of the operation of the feeding apparatus, while motor 2 is uncoupled automatically by means of the automatic coupling 12 (Fig. 1), but continues to drive the fan. By way of the contacts in the change-over switch 14 the current may then be connected to another one of the speeds of motor 1, after which the feeding device acquires a still higher speed, while motor 2 continues to drive the fan. The contacts 14 and 15 may be disposed in other rooms than the feeding device, in such a manner that stop and start as well as gear-changing of the feeding device will be effected by remote control.

Fig. 3 shows two motors 1 and 2 of which the former one may have two or more speeds. 17, 18 and 19 indicate automatic contact devices known per se which react either for rising and falling water temperatures or for rising and falling steam pressures. When the stoker is started by means of a contact 15, and the contact in the device 17 is closed, the motor 2 will first start, while driving at the same time the feeding device at lowest gear as well as the fan. By way of the contact in device 18 the current is subsequently connected to motor 1 which then alone and at a higher speed drives the feeding device, as the motor 2 is uncoupled automatically from the feeding device by means of the automatic coupling (12 on Fig. 1), but continues to drive the fan. By way of the contact in device 19 the current may then be connected to another one of the speeds of motor 1, and thus the feeding member will acquire a still higher speed, while motor 2 continues to drive the fan.

The number of speeds for the stoker may be varied from one to more by means of the number of motors and the number of speeds for each of these. On the drawing the motor 1 is assumed to have two speeds, the motor 2 one speed.

If the contact 19 breaks the current automatically, for instance at too high a water temperature relatively to the heat requirements or too high a steam pressure, then the current to one of the two or more speeds of motor 1 will be broken, while at the same time a current is closed automatically to another and lower one of the speeds of motor 1, and thus the speed of the stoker will be reduced. At any further rise of the water temperature or the steam pressure, the contact in the device 18 will break the current to the lowest speed of motor 1, and motor 1 will stop, after which the motor 2 is coupled by means of the automatic coupling 12 to the fuel-feeding device at the lowest gear, as the gear wheel on the coupling 12 runs forward on the coarse screw thread, and comes into engagement with the gear wheel 13, when the latter has its lowest number of revolutions, and motor 2 acts then as a driving power for the fuel-feeding device as well as for the fan. If then the water temperature or the steam pressure rises further, the contact in the device 17 will automatically break the current to motor 2, and the stoker stops then entirely. At falling water temperature or steam pressure owing to a rising consumption of heat, the stoker will first be started at the lowest gear, and then an automatic adjustment of the stoker will be effected in opposite succession, from a lower to a higher and higher gear, as the contacts 17, 18 and 19 will be closed in succession.

By constructing the gearing arrangement of the stoker as shown by Fig. 1, with two or more motors acting independently of one another as a driving power by means of the coupling 12, and by letting these motors be controlled by automatic devices 17, 18 and 19, the advantage is attained that the stoker at any time not only automatically starts and stops, but also automatically changes gear, in such a manner that the speed of the fuel supply closely follows the variations in the heat required.

If the motor 1 fails for one reason or another, the supply of fuel will not cease, as the motor 2 in that case automatically, by means of the coupling 12 is coupled to the feeding device at the lowest gear, and the stoker continues then in this gear, and cessations in the operation will therefore occur less frequently, and spare stokers for the heating plant will thus not be required.

Fig. 4 shows a tilting contact inserted in the air duct from the fan of the stoker and consisting of a tilting or swinging device, for instance a plate 20 which is pivoted about a horizontal or vertical shaft in the air duct 21, on which shaft an electric contact is disposed which closes or breaks the controlling current or the main current to the motor which drives the feeding device for the fuel. On the drawing the contact is shown as a mercury tube 22. The tilting contact is shown on Figs. 2 and 3 as 22.

In the position of repose, the tilting device stands with the plate 20 vertical, and the contact 22 is disconnected. If for instance motor 2 is connected, then fan 11 will be started, and the resulting pressure in the air duct 21 tilts the plate 20 whereby the current is closed in the mercury tube 22, and only when this current is closed the current can reach the motor 1.

By this arrangement a co-operation is attained between the operation of the fan and the operation of the feeding device, as the motor 1 cannot drive the feeding device, unless the fan is running. The fan may be imagined to stop, for instance when the safety fuses of the motor 2 are blown, but as the tilting contact thus breaks the current to the motor 1, the latter will be stopped automatically. By means of the tilting contact the supply of fuel to the furnace will thus be stopped, when the quantity of air required for the combustion is not supplied by the fan.

JÓRGEN HELGE JACOBSEN.

PUBLISHED

MAY 11, 1943.

BY A. P. C.

J. H. JACOBSEN

ELECTROMOTOR-DRIVEN MECHANICAL STOKERS

Filed July 16, 1940

Serial No. 345,866

Fig. 1.

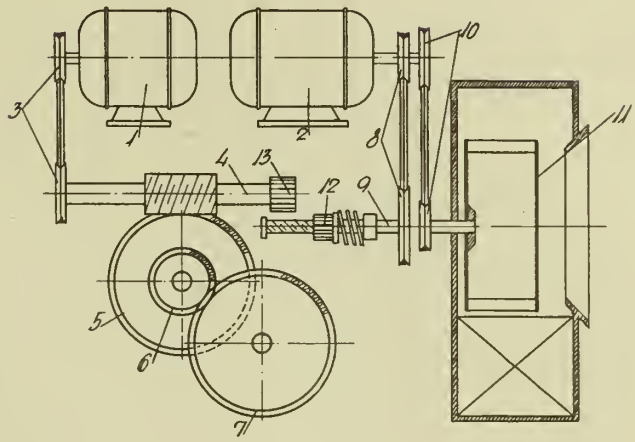

Fig 2.

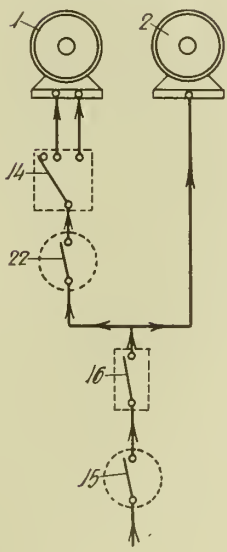

Fig 3.

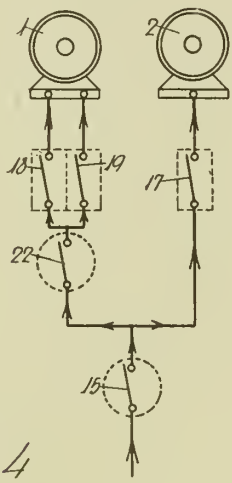

Fig 4

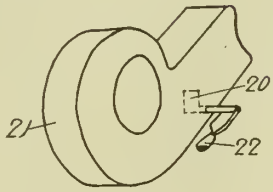

Published May 11, 1943

Serial No. 346,496

ALIEN PROPERTY CUSTODIAN

PROCESS FOR MANUFACTURING PILE FABRIC SUCH AS CARPET

Genkichi Niki, Shibuyaku, Tokyo, Japan; vested in the Alien Property Custodian

Application filed July 20, 1940

This invention relates to a process of manufacturing pile fabric such as carpet comprising rotating a cylinder on the periphery of which an original design is stuck, rotating simultaneously a holder tube in which one single bar or two bars joined together are inserted, so that said bars rotate together with said holder tube while the bars are moving forwards gradually through said holder tube, winding threads of one or more than one kind or color round said bars in order according to the patterns and colors of the original design in the file indicated by an indicator secured at a suitable place each time the original design on the cylinder completes one rotation, moving said cylinder forwards by one file in the same direction as the movement of the bars each time it completes one rotation, replacing said bars with others, and setting the bars on edges in parallel after the threads have been wound round the bars for the whole design, pasting a lining on the surface of the bars around each of which the threads are wound, and cutting the threads around the bars along the center lines on the opposite surface of the bars; and it has for its object to obtain a process of manufacturing pile fabric such as carpet of any desired shapes with a wide breadth and short roots of piles in a simple and efficient manner by using reduced original designs and slender bars.

The accompanying drawings show an apparatus according to this invention. Fig. 1 is a front view of the apparatus, Fig. 2 a plan view of the same, Fig. 3 a front view of a friction clutch, Fig. 4 a plan view of the same, Fig. 5 a longitudinal section showing a mechanism for rotating bars round which threads are wound, Fig. 6 a cross section of the same, Fig. 7 a longitudinal section of a mechanism for moving a rack, Fig. 8 a front view of an apparatus for feeding and rotating a cylinder, Fig. 9 a plan view of the same, Fig. 10 a cross section of the apparatus along the line A—A in Fig. 2, Fig. 11 an end view showing a clutch and transmission mechanism for the cylinder and bars, Fig. 12 a plan view of the same, Fig. 13 a perspective view of the bars around which threads are wound, Fig. 14 a cross section of the same, Fig. 15 a plan view showing how the bars are set on edges in parallel and put in a frame, Fig. 16 a longitudinal section of the same, and Fig. 17 a sectional view showing how the bars with the threads on the surface of which a lining is pasted, are removed while the threads on the opposite surface are cut.

The features of the invention will be understood from the following description referring to the drawings.

Holder tubes **10 11 16** are arranged in a straight line with suitable spaces between them, the tubes **10** and **11** being mounted on bearings **55** rotatably and the tube **16** being supported by a support **57**.

The tubes **10 11** are connected to a shaft **17** through toothed wheels **7' 8' 9'** and **7 8 9** respectively and thence to a motor. In the holder tube **10** are inserted two slender bars **13** joined together, on which threads are wound round, the left ends of the bars being inserted in the tube **11**. At the end of the tube **10** is screwed a cap **12** having a rectangular hole through which the bars **13** move, thereby enabling the latter to rotate together with the tubes **10 11**. In a tube **16** is inserted a rack **14** which is connected with a shaft **17** through toothed wheels **21 25 20** and a pinion on which a clutch is provided. At the end of the rack **14** a cap **15** is mounted rotatably and this portion is inserted in the tube **10** so that the rack moves forwards in a straight line without friction with the tube **10**.

The right ends of the bars **13** are held by the cap **15** and the bars are pushed thereby to the left, thus enabling the threads to be wound in order round the bars between the tubes **10 11**. At the right end of the rack **14** a weight **24** is hung so that the rack returns to its original position as soon as the clutch is disengaged.

32 is a cylinder on the periphery of which an original design is stuck. The cylinder is mounted slidably on a shaft **30** provided with a groove **31** for a wedge. The forked ends of a handle **34** secured on a screw rod **35** are fitted in a circular groove **33** provided along the periphery of an end portion of the cylinder. The cylinder is rotated through the shaft **30** and the mechanism mentioned below, and can also be moved to the left by the handle **34**.

At the right end of the shaft **30** are provided a clutch **29** and a worm wheel **28** engaging a worm **27** provided at the rear end of the shaft **26**, and at the left end are provided a clutch **40** and a toothed wheel **39** connected with a screw rod **35** through toothed wheels **38 37 36**, and also a weight **41** is hung.

The clutches **29** and **40** have teeth cut oppositely to each other, and the motive power is transmitted to the worm wheel **28** through the shaft **26** of the toothed wheel **25**, and thus the shaft **30** is rotated. While the cylinder **32** is rotated, the clutch **40** races, and when the clutch

29 is disengaged and the shaft 30 is rotated reversely by the action of the weight 41, the cylinder also makes reverse rotation, a claw 55 engaging a stop 59, and thus the cylinder returns to its original position.

At the same time, the clutch 40 operates also to rotate the screw rod 35 through the wheels 39 38 37 6, when the cylinder is moved to the left by one file by the handle 34 and hence the position of the original design on the cylinder changes in conjunction with the indicator.

A motor 1 is connected with the shaft 17 through a belt 2, friction clutch 3 4 and wheels 5 6. The friction clutch is connected with a pedal 50 through levers 48 49. By pedalling the pedal 50 the power is transmitted to the shaft 17 through the friction clutch, and the tubes 10 and 11 and the bars 13 are rotated through the shaft 17, toothed wheels 7 8 9 and 7′ 8′ 9′, and the rack 14 is also acted upon through the worm 18, worm wheel 19, toothed wheels 20 25 21 and pinion 22, thereby moving the rack 14 forwards and feeding the bars to the tube 11, and rotating the cylinder through the shaft 30, shaft 26 of the wheel 25, worm 27 and worm wheel 28.

Thus, threads of different colors corresponding to the patterns and colors of the original design on the cylinder are wound by one file round the bars between the tubes 10 and 11 as indicated by the indicator 51 during the operations described above.

44 45 46 are links connected with a handle 47, which links are connected with the clutches 23 and 29 respectively through levers 43 and 42.

Each time the threads of different colors corresponding to the colors and patterns in the file of the original design have been wound round the bars, the handle 47 is operated to disengage from the clutches 23 and 29, when the cylinder and rack return simultaneously to their original positions by the action of the weights 24 41, and the cylinder is moved each time by one file by the handle 34. The bars are replaced through the left end of the tube 11 with other bars.

To work the apparatus shown, the portion of the bars near the left end is brought in the first place between the tubes 10 11 and the cylinder is brought to a suitable position at the right portion of its shaft so that the first file on the left of the original design is indicated by the indicator 51.

Power is then transmitted to the shafts 17 30 to rotate the bars and cylinder. The bars are rotated at such a high speed as about 1500 rotations per minute while they are moved forwards from the tube 10 so that the threads 52 are wound round the bars. The same operations are repeated for the second file and so on.

After the threads have been wound round the bars for the whole design, the bars are set on edges in parallel as shown in Figs. 15 & 16 so that the threads present the reverse design, and are put in a frame 53 and tightened by inserting filling 60.

A lining 54 is pasted on the threads and then it is subjected to drying. Then, the bars in the frame are removed in order as shown in Fig. 17, the threads on the opposite surface being cut with knives inserted between two bars while the fabric is taken up. In this manner, carpets of pile fabric with the same design as the original can be manufactured.

According to this invention, it is possible also to manufacture two sheets of carpet simultaneously by winding threads round each bar and setting up the bars in parallel in order and pasting linings on both faces of the threads around the bars, and cutting the threads halfway between the linings.

The special effects produced by this invention are as follows:

(*a*) It is possible to give each carpet a different design in a simple manner, in other words, the invention has advantages of hand weaving and machine weaving;

(*b*) It is possible to manufacture easily carpets of any shapes, such as square, round, triangular, hexagonal carpets;

(*c*) The bars are inserted in the holder tubes so that they rotate together, and consequently the bars will not be bent or twisted, and thus carpets with a wide breadth and short roots of piles are manufactured rapidly in a simple manner;

(*d*) Reduced original designs may be used to manufacture carpets of large size;

(*e*) As the bars are inserted in the holder tubes, noise is lessened, and moreover workers may remain in the same seats during the operations, and thus they can work longer without excess labor, thereby increasing efficiency.

GENKICHI NIKI.

PUBLISHED

MAY 11, 1943.

BY A. P. C.

G. NIKI

PROCESS FOR MANUFACTURING PILE FABRIC SUCH AS CARPET

Filed July 20, 1940

Serial No.

346,496

6 Sheets-Sheet 1

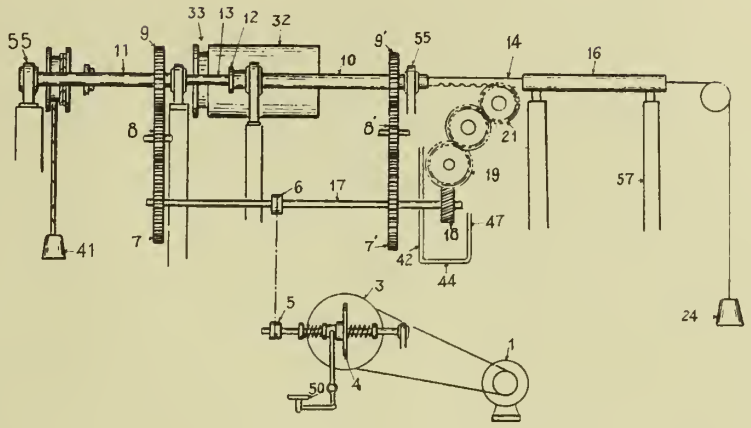

Fig.2.

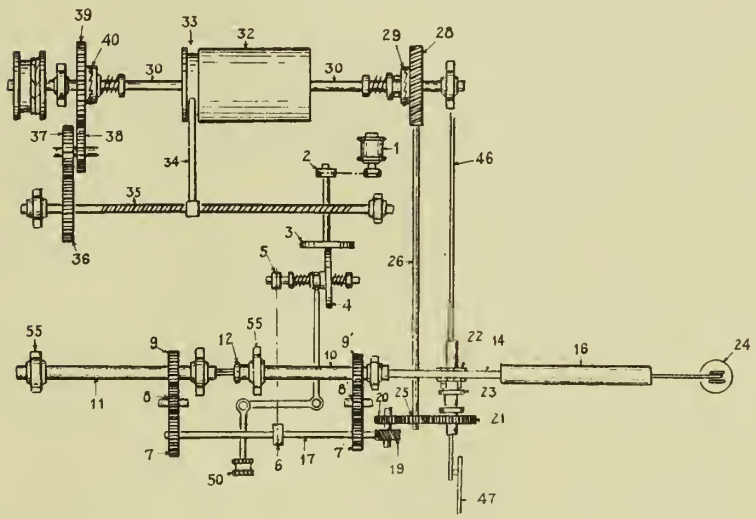

Inventor

Genkichi Niki

By Williams, Cadbury & Blinkie

Attys.

PUBLISHED

MAY 11, 1943.

BY A. P. C.

G. NIKI
PROCESS FOR MANUFACTURING PILE
FABRIC SUCH AS CARPET
Filed July 20, 1940

Serial No.
346,496

6 Sheets-Sheet 2

Fig.3.

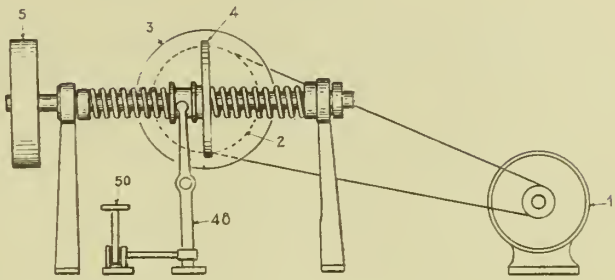

Fig.4.

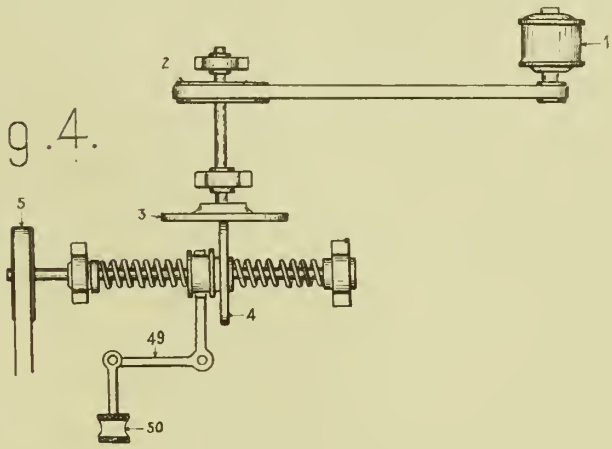

Fig.6.

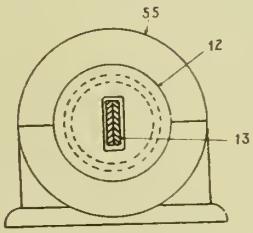

Fig.5.

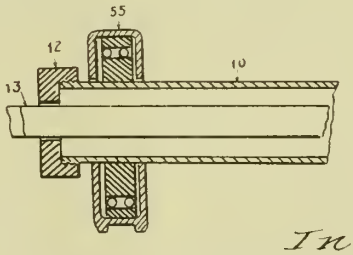

Inventor.
Genkichi Niki
By Williams, Bradbury & Hinks
Attys.

PUBLISHED

MAY 11, 1943.

BY A. P. C.

G. NIKI

PROCESS FOR MANUFACTURING PILE FABRIC SUCH AS CARPET .

Filed July 20, 1940

Serial No. 346,496

6 Sheets-Sheet 3

Fig. 12.

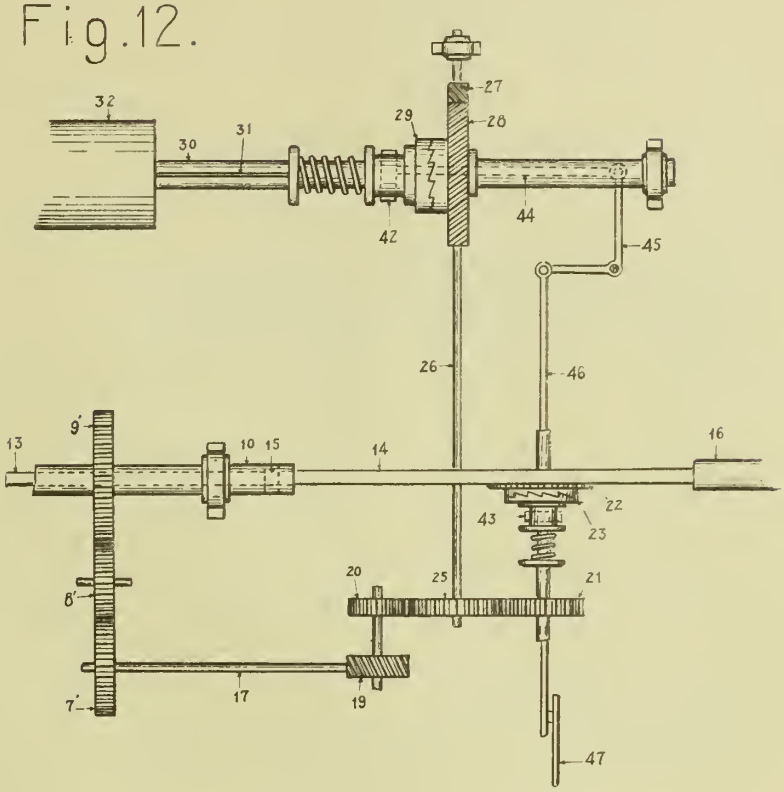

Fig. 7.

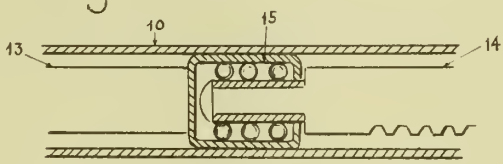

Inventor
Genkichi Niki
By Williams, Bradbury & Niki
Attys

PUBLISHED

MAY 11, 1943.

BY A. P. C.

G. NIKI
PROCESS FOR MANUFACTURING PILE
FABRIC SUCH AS CARPET
Filed July 20, 1940

Serial No.
346,496

6 Sheets-Sheet 4

Fig. 8.

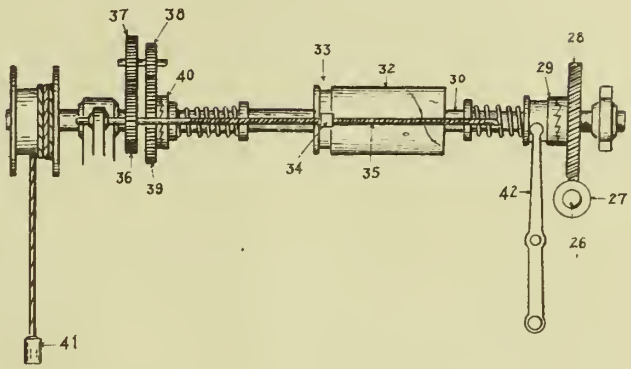

Fig. 9.

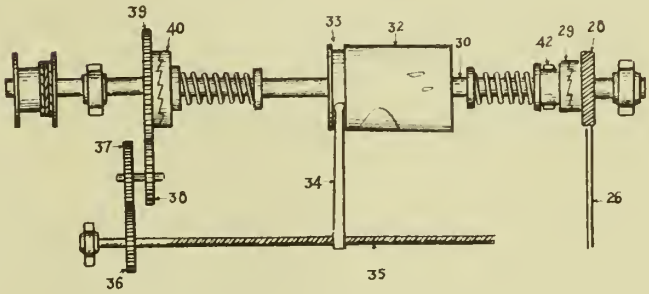

Inventor
Genkichi Niki
By Williams, Bradbury & Hinks
Attys

PUBLISHED

MAY 11, 1943.

BY A. P. C.

G. NIKI
PROCESS FOR MANUFACTURING PILE
FABRIC SUCH AS CARPET
Filed July 20, 1940

Serial No.
346,496

6 Sheets-Sheet 5

Fig.10.

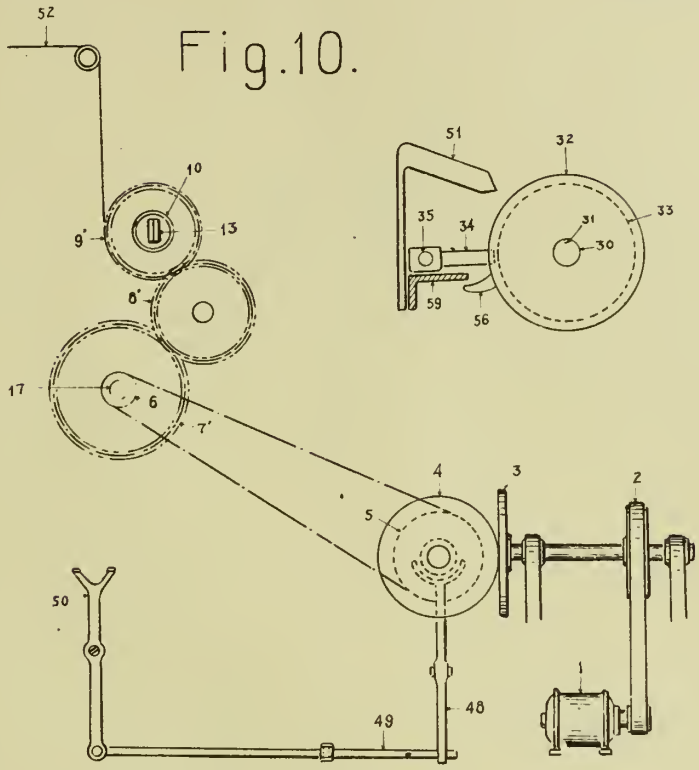

Fig.17.

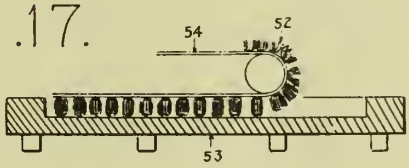

Fig.14.

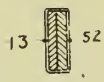

Fig.13.

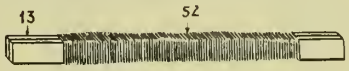

Inventor.
Genkichi Niki
By Williams, Bradbury & Hitt
Attys.

PUBLISHED
MAY 11, 1943.
BY A. P. C.

G. NIKI
PROCESS FOR MANUFACTURING PILE FABRIC SUCH AS CARPET
Filed July 20, 1940

Serial No. 346,496

6 Sheets-Sheet 6

Fig. 11.

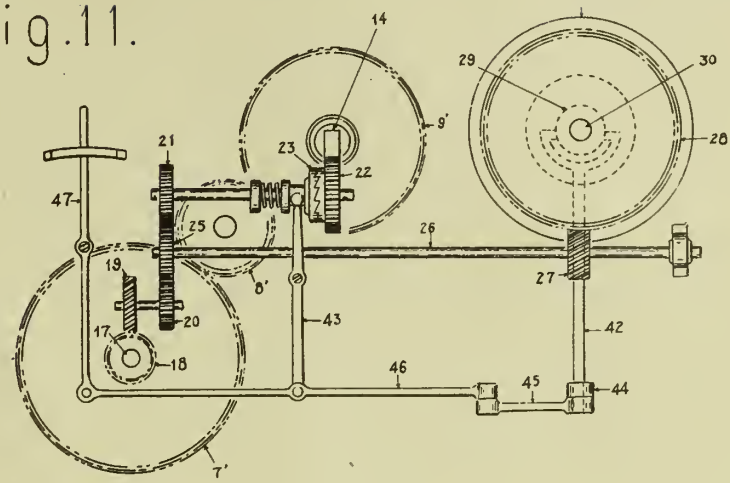

Fig. 16.

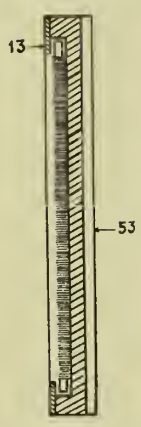

Fig. 15.

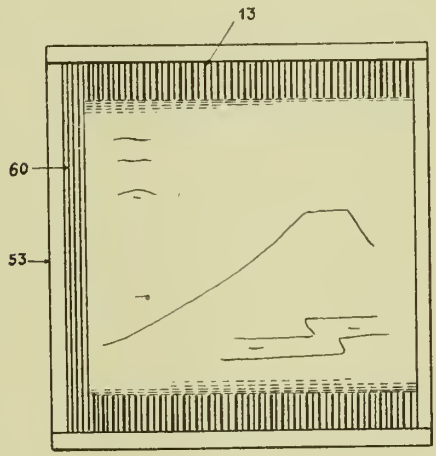

Inventor
Genkichi Niki
By Williams, Bradbury & Hinkle
Attys.